


**TIPS**:

**Your suggestions and comments for Costway are really important to us!**
**We sincerely solicit you to go back to our shop and leave a good rating in just a simple click. It would be quite encouraging if you could kindly do so like below:**

★★★★★ **Great products so far**
February 24, 2018
Great product so far. Fast delivery, easy setup, and working without any issues.

**With your inspiring rating, Costway will be more consistent to offer you EASY SHOPPING EXPERIENCE, GOOD PRODUCTS and EFFICIENT SERVICE!**

**US office:Fontana**
**UK office:Ipswich**

COSTWAY
SHOP EASY. SAVE MONEY.

COSTWAY
SHOP EASY. SAVE MONEY.

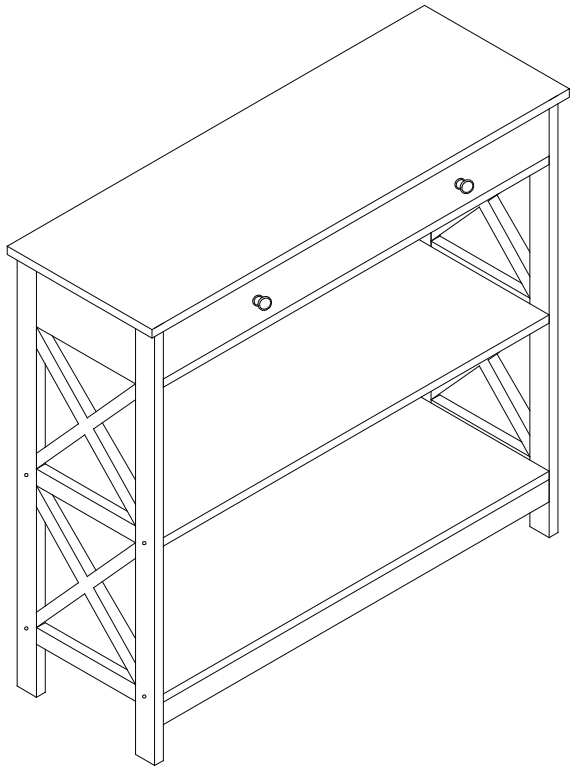

# USER'S MANUAL

## Entrance Table

## HW66090

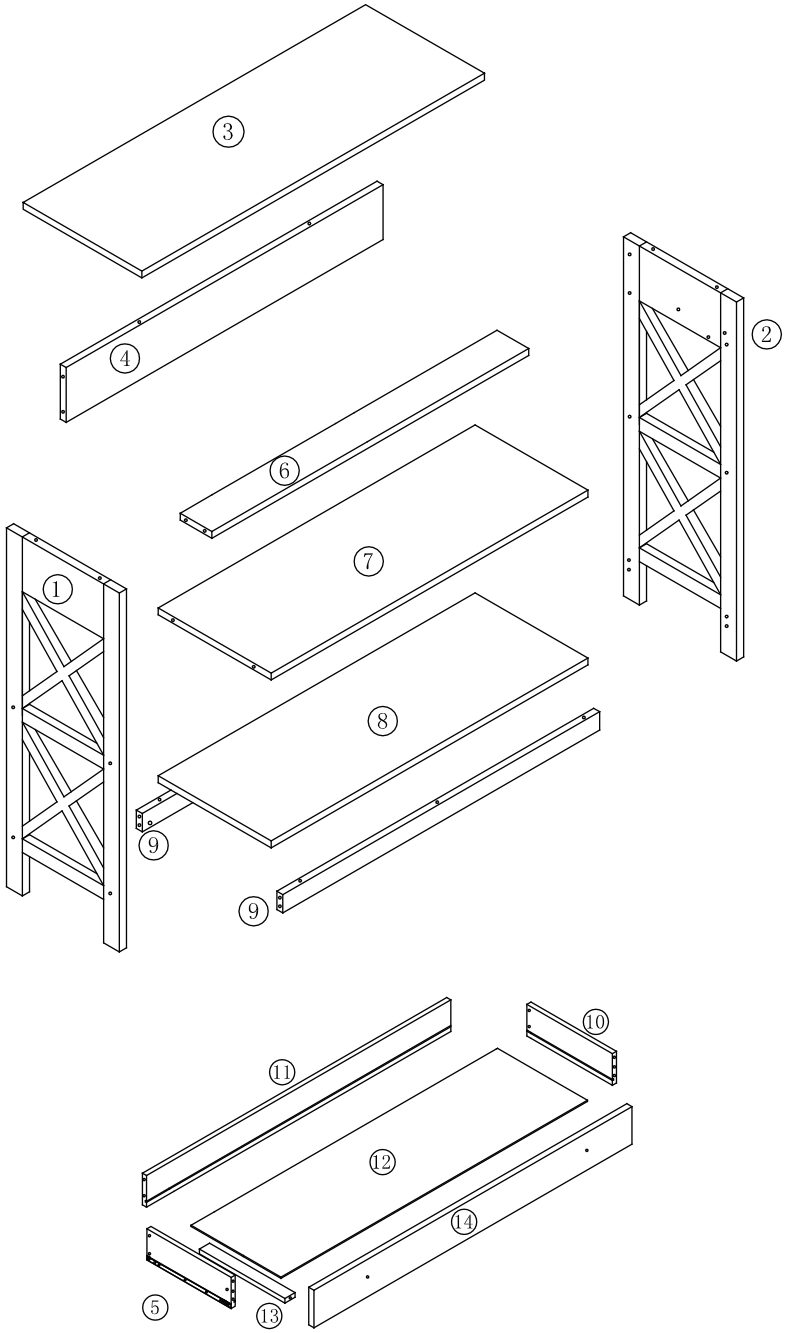


PRODUCT ASSEMBLY

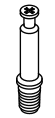
A 17pcs


B 17pcs


C 4pcs


D 13pcs


E 4pcs


J 4pcs


K 2pcs


L 8pcs


M 8pcs


N 2pcs


O 2pcs

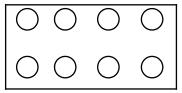
P 8pcs


F 1pc


G 1pc


H 2pcs


I 2pcs

## 1

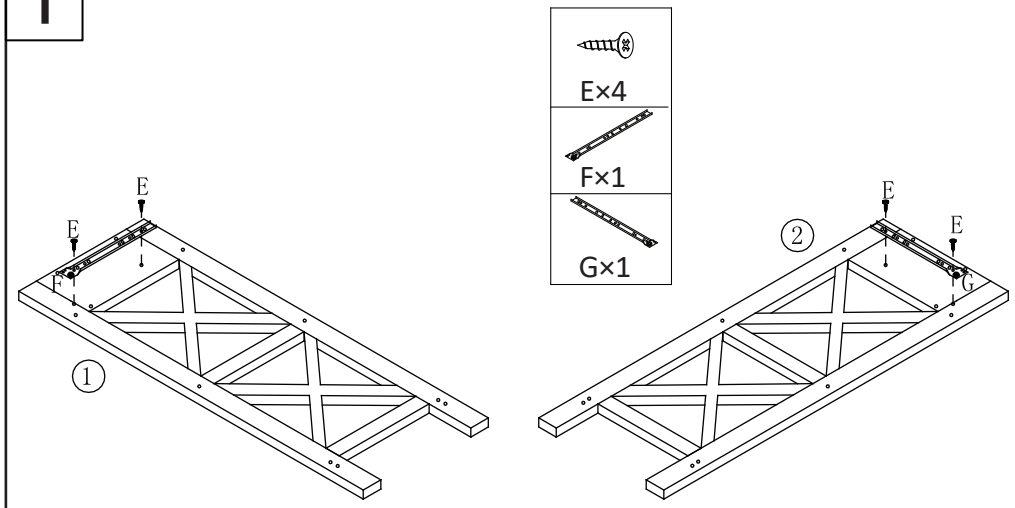


## 2

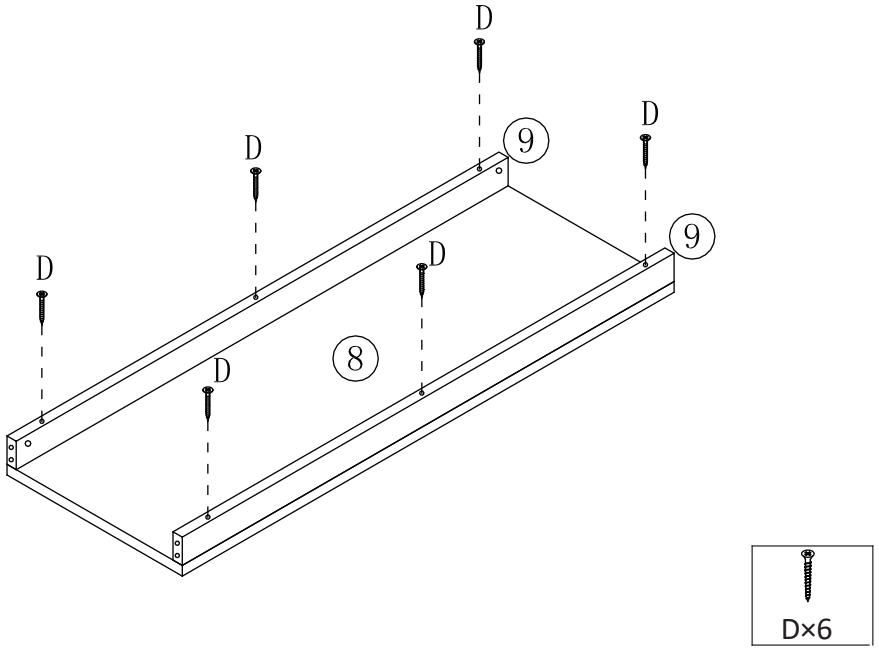


PRODUCT ASSEMBLY

## 3

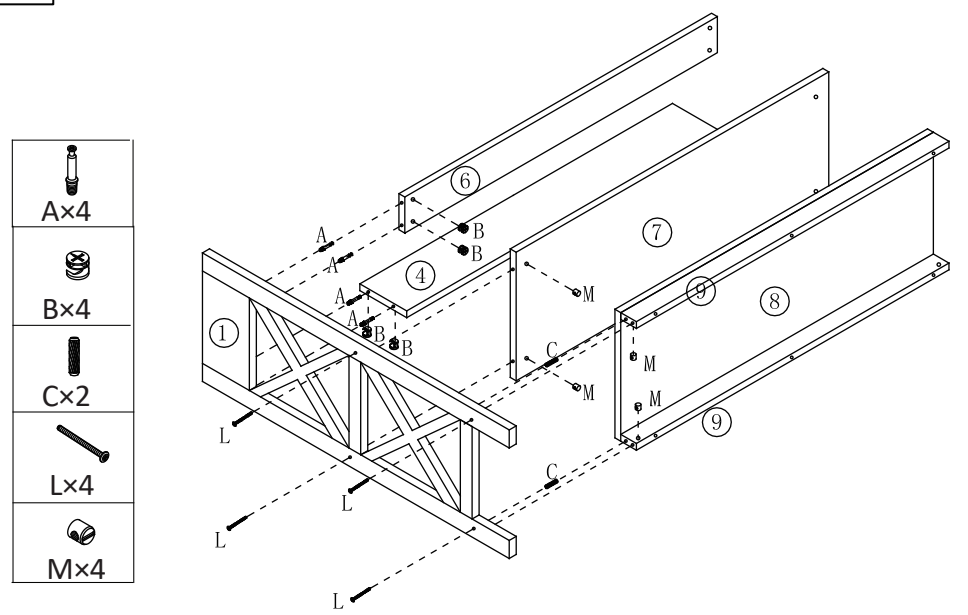


## 4

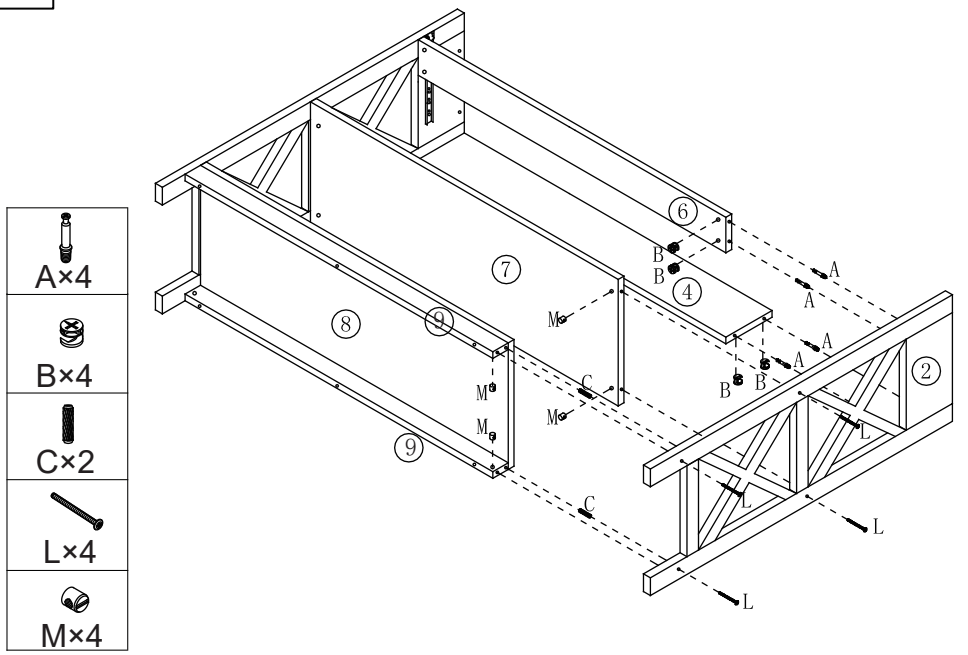

## 5

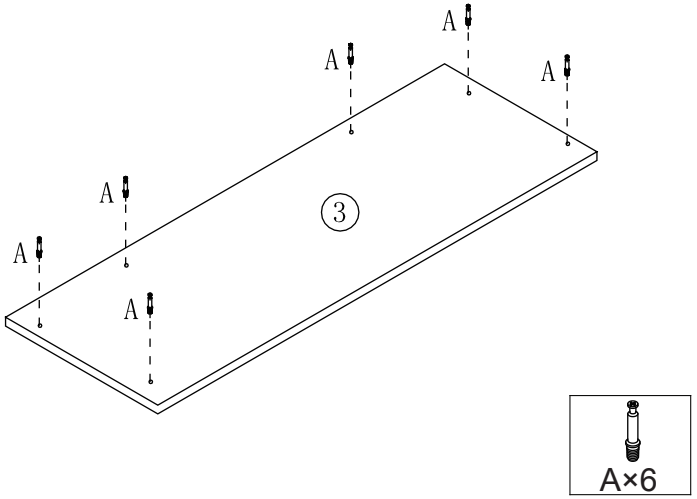


## 6

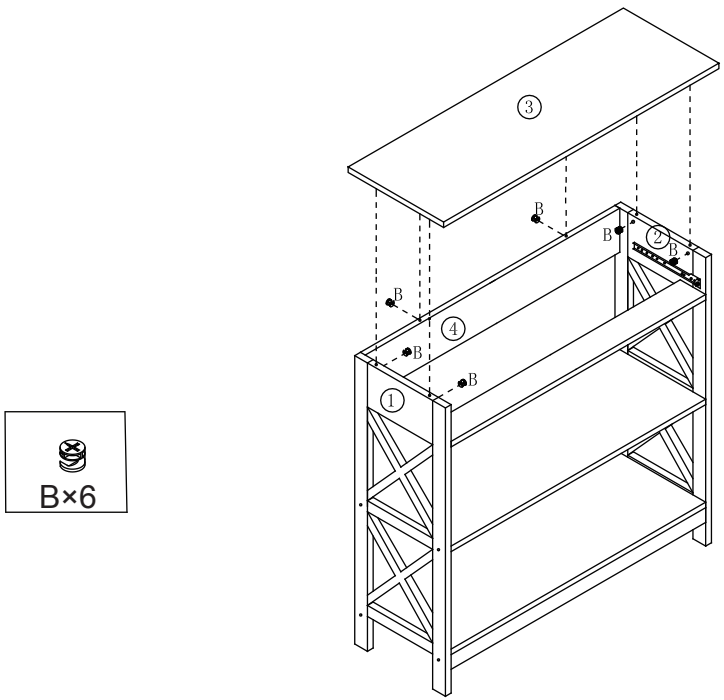


PRODUCT ASSEMBLY

## 7

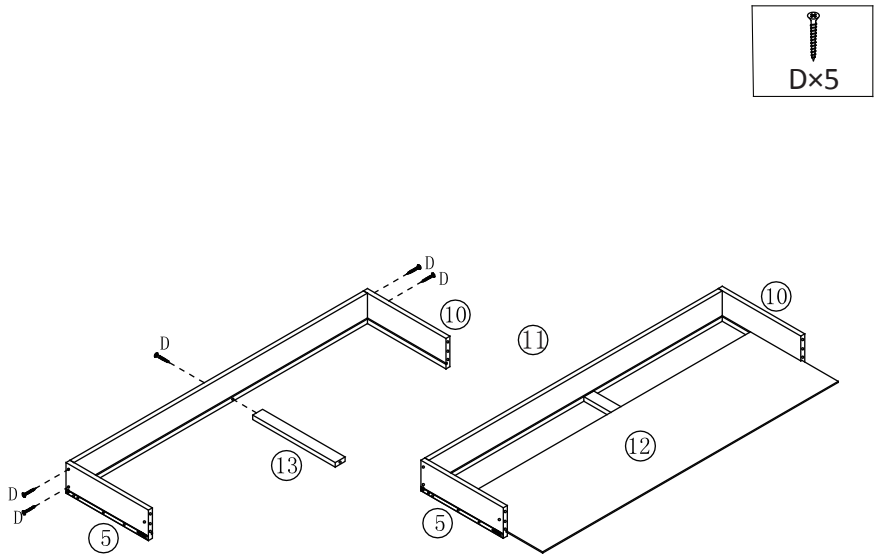


## 8

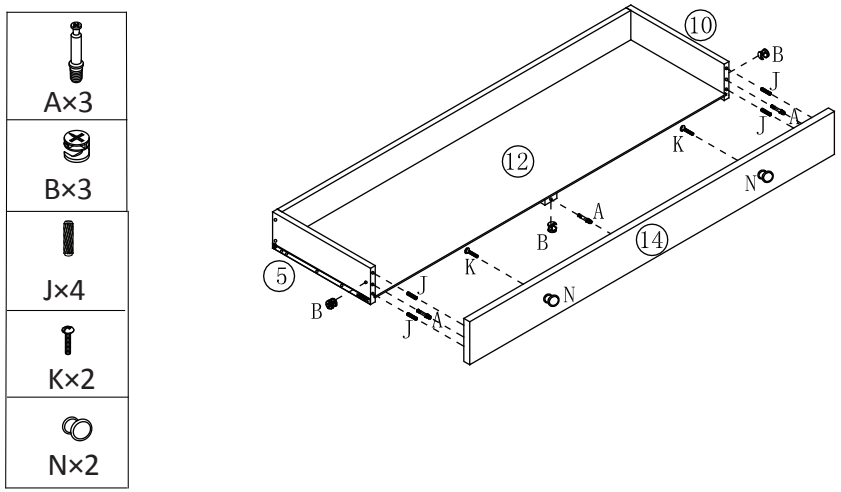

## 9

P×8

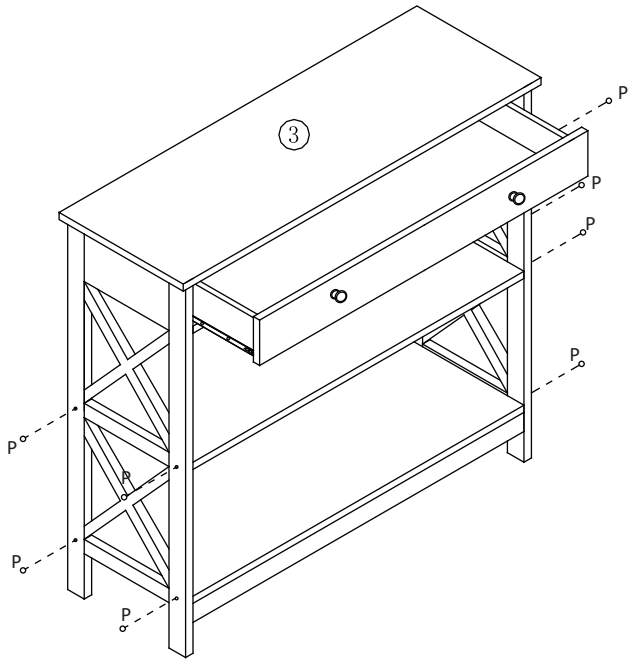


## 10

D×2

H×2

I×2

O×2

