Commercial Electric™

Item# 1013 179 578
Model #HPSA11CWB

USER GUIDE

Single Pole Smart Light Switch

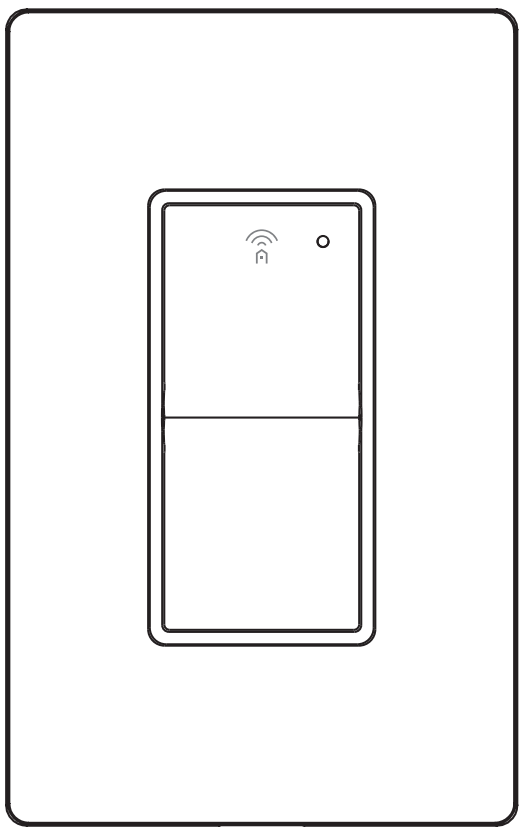

WiFi® CERTIFIED

Bluetooth®

THANK YOU

We appreciate the trust and confidence you have placed in Commercial Electric through the purchase of this Smart Light Switch. We strive to continually create quality products designed to enhance your home. Visit us online to see our full line of products available for your home improvement needs. Thank you for choosing Commercial Electric!

Table of Contents

Safety Information 2
FCC Regulation 3
Wireless Protocol 4
Warranty 5
Pre-Installation 5
Package Contents 6
Installation 7
Operation 15
Specification 19
Care & Cleaning 19
Troubleshooting 20

Safety Information

WARNING:

- Not compatible with standard 3-way or 4-way when only single switch been used. Do not exceed the load power rating limit of the device. Maximum total wattage rating: Up to 300 total watts for LED and CFL; 600W/120V for Incandescent/Halogen.
- For indoor use only. Do not use in wet location.
- This product is to be installed or used in accordance with electrical codes and regulations. If you are unsure of any part of the instructions, consult an electrician.
- Save this instruction sheet. It contains important technical data along with testing and troubleshooting information which will be useful after installation is complete.
- Do not disassemble the product or make repairs yourself. You run the risk of electric shock and voiding the limited warranty. If you need service, or If you need assistance, please contact Customer Service.

NOTE: Make sure to use this product together with 15A circuit breaker in the upstream.

Safety Information (continued)

CAUTION: TO REDUCE THE RISK OF OVERHEATING AND POSSIBLE DAMAGE TO OTHER EQUIPMENT, DO NOT INSTALL TO CONTROL A RECEPTACLE, A MOTOR OPERATED APPLIANCE, A FLUORESCENT LIGHTING FIXTURE, OR A TRANSFORMER-SUPPLIED APPLIANCE.

FCC Regulation

Supplier's Declaration of Conformity

47 CFR § 2.1077 Compliance Information

Responsible Party

Leedarson America, Inc. 300 Technology Court SE Suite 100; Smyrna, GA 30082 1-678-293-8382 customerservice@leedarson.com

Unique Identifier: HPSA11CWB (SKU # 1013 179 578)

Contains FCC ID: 2AB2Q-LA02301
This equipment complies with FCC radiation exposure limits set forth for an uncontrolled environment.
This equipment must be installed and operated in accordance with provided instructions and the antenna(s) used for this transmitter must be installed to provide a separation distance of at least 20 cm from all persons and must not be co-located or operating in conjunction with any other antenna or transmitter. End-users and installers must be provided with antenna installation instructions and transmitter operating conditions for satisfying RF exposure compliance.

This device complies with Part 15 of the FCC Rules. Operation is subject to the following two conditions: (1) this device may not cause harmful interference, and (2) this device must accept any interference received, including interference that may cause undesired operation.

FCC Regulation (continued)

Caution: The user is cautioned that changes or modifications not expressly approved by the party responsible for compliance could void the user's authority to operate the equipment.
Note: This equipment has been tested and found to comply with the limits for a Class B digital device, pursuant to part 15 of the FCC Rules. These limits are designed to provide reasonable protection against harmful interference in a residential installation. This equipment generates, uses, and can radiate radio frequency energy and, if not installed and used in accordance with the instructions, may cause harmful interference to radio communications. However, there is no guarantee that interference will not occur in a particular installation. If this equipment does cause harmful interference to radio or television reception, which can be determined by turning the equipment off and on, the user is encouraged to try to correct the interference by one or more of the following measures:
—Reorient or relocate the receiving antenna.
—Increase the separation between the equipment and receiver.
—Connect the equipment into an outlet on a circuit different from that to which the receiver is connected.
—Consult the dealer or an experienced radio/TV technician for help.

Wireless Protocol

The Wi-Fi CERTIFIED™ Logo is a certification mark of Wi-Fi Alliance®. Apple and the Apple logos are trademarks of Apple, Inc., registered in the U.S., and other countries. App Store is a service mark of Apple Inc. Google and Google Play logo are trademarks of Google LLC.

Warranty

1 YEAR LIMITED WARRANTY

This product is guaranteed to be free of defects in materials and workmanship for 1 year from the date of purchase. Guarantee does not include normal wear and tear.

C ETL LISTED US

Intertek
5003280

Pre-Installation

TOOLS REQUIRED

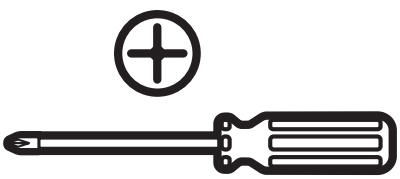

Phillips screwdriver

Safety goggles

Gloves

OPTIONAL TOOLS

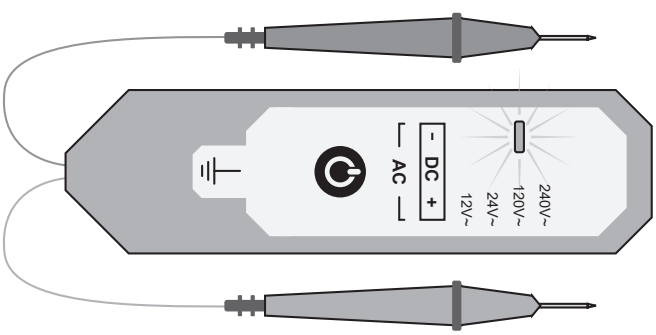

Continuity tester

Non-contact voltage tester

Package Contents

A

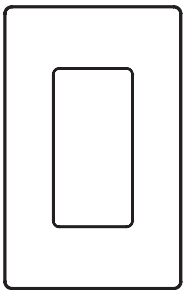

B

C

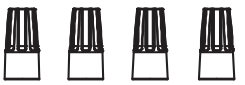

D

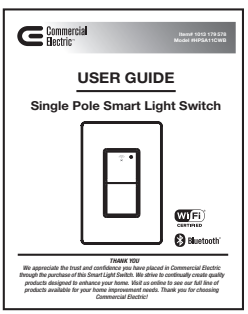

E

F

G

Part	Description	Quantity
A	Smart Light Switch	2
B	Wall Plate	2
C	Phillips Screws for Light Switch	4
D	Wire Nuts	8
E	User Guide	1
F	Quick Start Guide	1
G	Spare Wire	2

Installation

NOTE: Please identify and mark the wires inside the wall box before installation.

- □ LINE wire can also be identified with a voltage tester. This wire is always energized while circuit breaker is on, regardless of switch status. Refer to instructions specific to voltage testing device for safe and proper testing or call a professional electrician to install the switch.
- □ LINE/LOAD wire is typically black
- □ NEUTRAL wire is typically White
- □ TRAVELER wire is typically Gray and Red

1 Identify installation type

Install the single pole light switch in a single gang application.

To control the lighting from more than one location such as in a 3-way or multi-way, you will need either a wired another Single Pole Switch, or a wireless Hubspace Remote Switch (SKU#1015080931 sold separately).

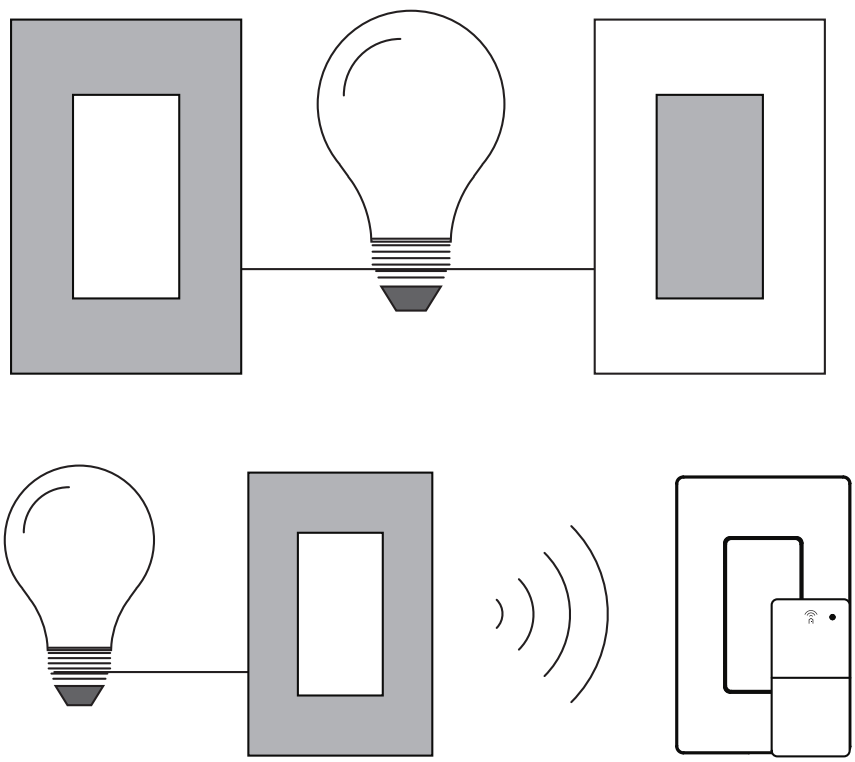

Installation (continued)

2 Turn power off at the circuit breaker or fuse for the light switch that you are replacing.

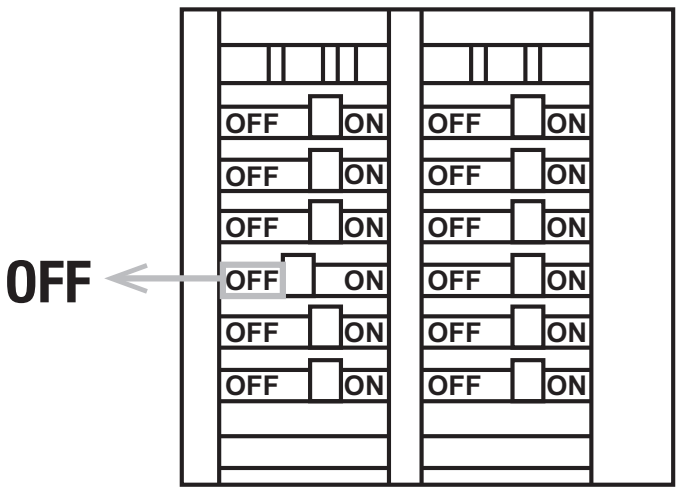

3 Remove the old light switch by disconnecting all wires.

4 Connect the new light switch wires as follows.
If the wires are different than the diagram shown, or you are uncomfortable with the installation, call a licensed electrician for help.

NOTE:

- □ Make sure that the power at the circuit breaker is off before wiring.
- □ **Neutral Wire is required.** Confirm the wall box contains a Neutral Wire (Typically white). If the wall box doesn't have a Neutral Wire, please try another location in your home or call a professional electrician to install the switch.
- □ The wire colors in the wall box indicated in this manual are the usual colors and may differ in some homes.
- □ Ensure the Wire Nuts (D) are securely fastened to each wire.
- □ Additional instructions are available on the Homedepot.com.

Installation (continued)

WARNING: TO AVOID FIRE, SHOCK OR DEATH, turn off power at the circuit breaker.

WARNING: Please use electrical tape to cover any exposed wires to help prevent electrical shock.

Check your wall box:

1. Remove wallplate and disconnect existing switch.
2. Restore power at the circuit breaker. Carefully test wires with non-contact voltage tester to find the line (hot) wire.
3. Turn off power at the circuit breaker.
4. Mark the wires as shown below. Please note neutral wires are required to operate this device.
5. Quick tip: Neutral wires are typically white and will be found bundled inside the electrical box.

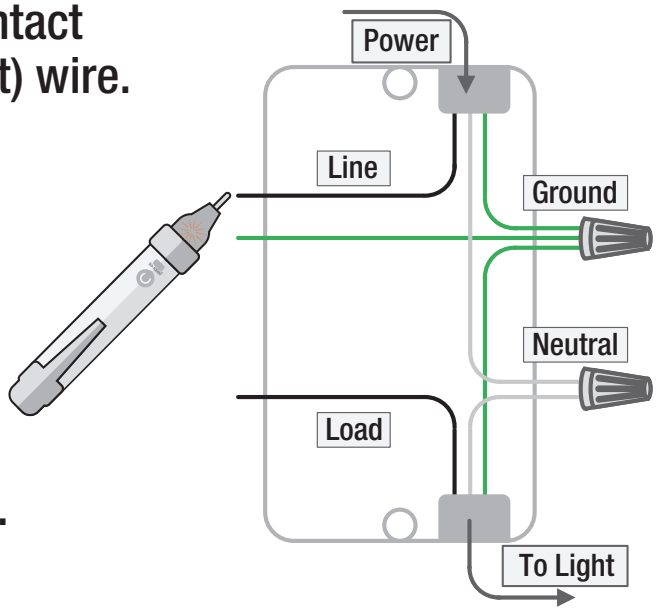

Installation (continued)

Single Pole Switch

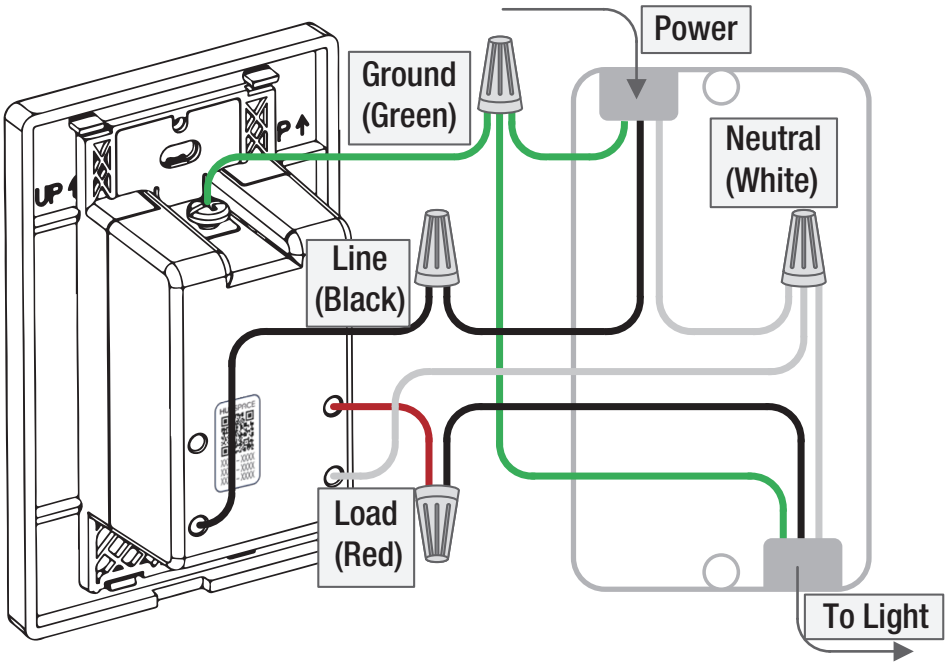

3-way Kit by Hubspace APP -- For 3-way application and wired in single-pole wall box

Requires 2 units of Commercial Electric Hubspace Single-pole Switch

Primary/Load Controlling Switch

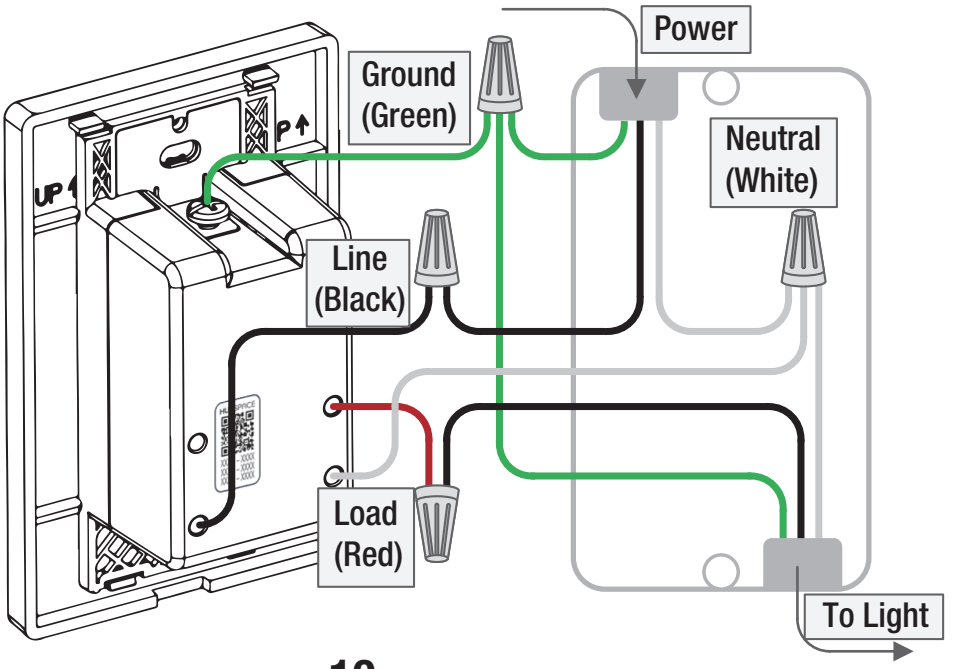

Installation (continued)

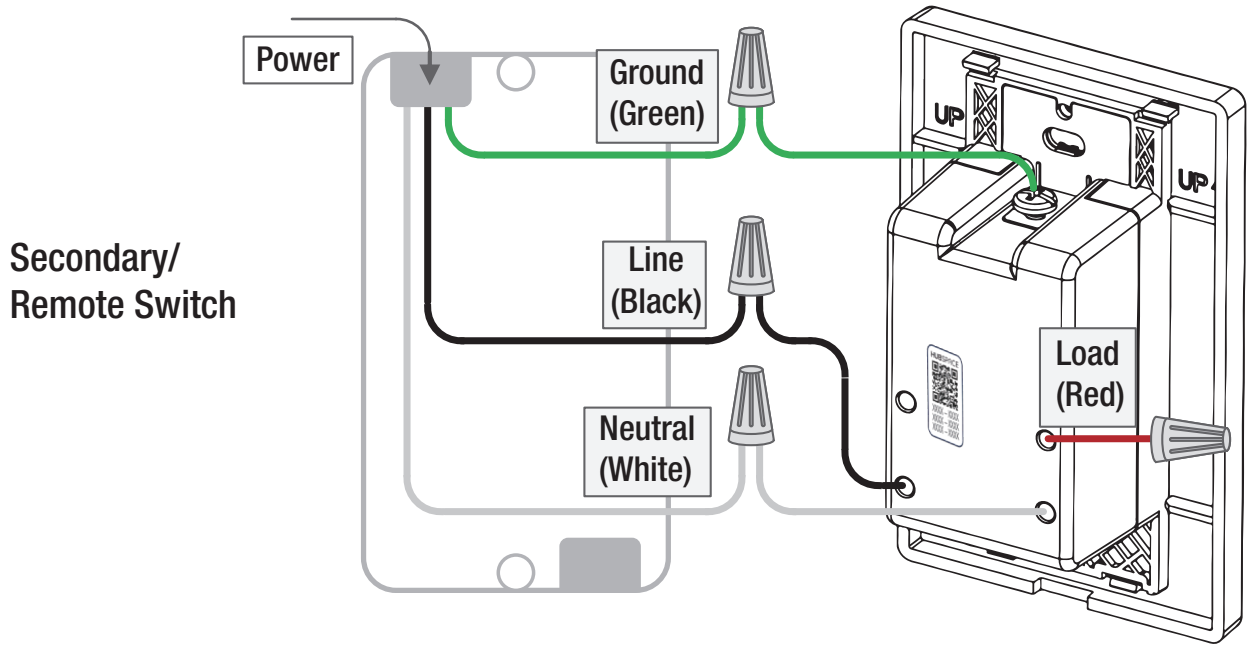

NOTE: The No.4 load line of the Secondary/Remote Switch shall be connected separately with a wire cap and not connected to the load line of the wall box.

NOTE: 1. For the Primary/Load Controlling Switch, the Load/Line/Ground/Neutral wire should be connect, and the Traveler on the wall box should be covered by the wire nut.
2. For the Secondary/Remote Switch, the Line/Ground/Neutral wire should be connect, and the Traveler on the wall box and Load wire on the switch should be covered by the wire nut.

Installation (continued)

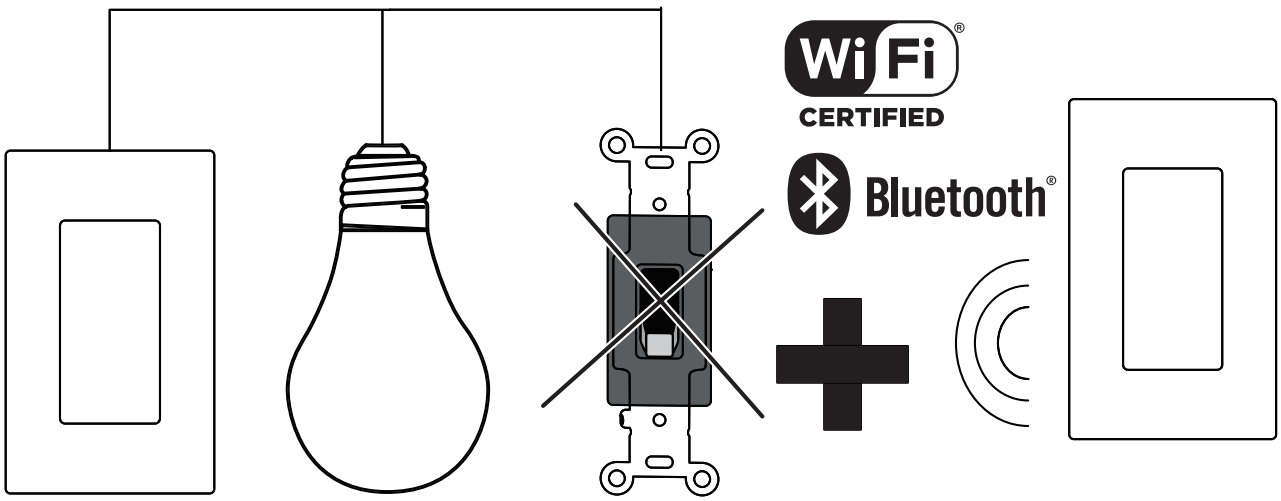

NOTE: Connect two Single-Pole switches via WiFi+BLE wireless technology. Users can select the primary and secondary switches through the APP, then pair them with the light to be controlled for 3-way switching. Traditional switches are not compatible.

Installation (continued)

3-way Kit by Hubspace APP -- For 3-way application and wired in 3-way wall box

Requires 2 units of Commercial Electric Hubspace Single-pole Switch

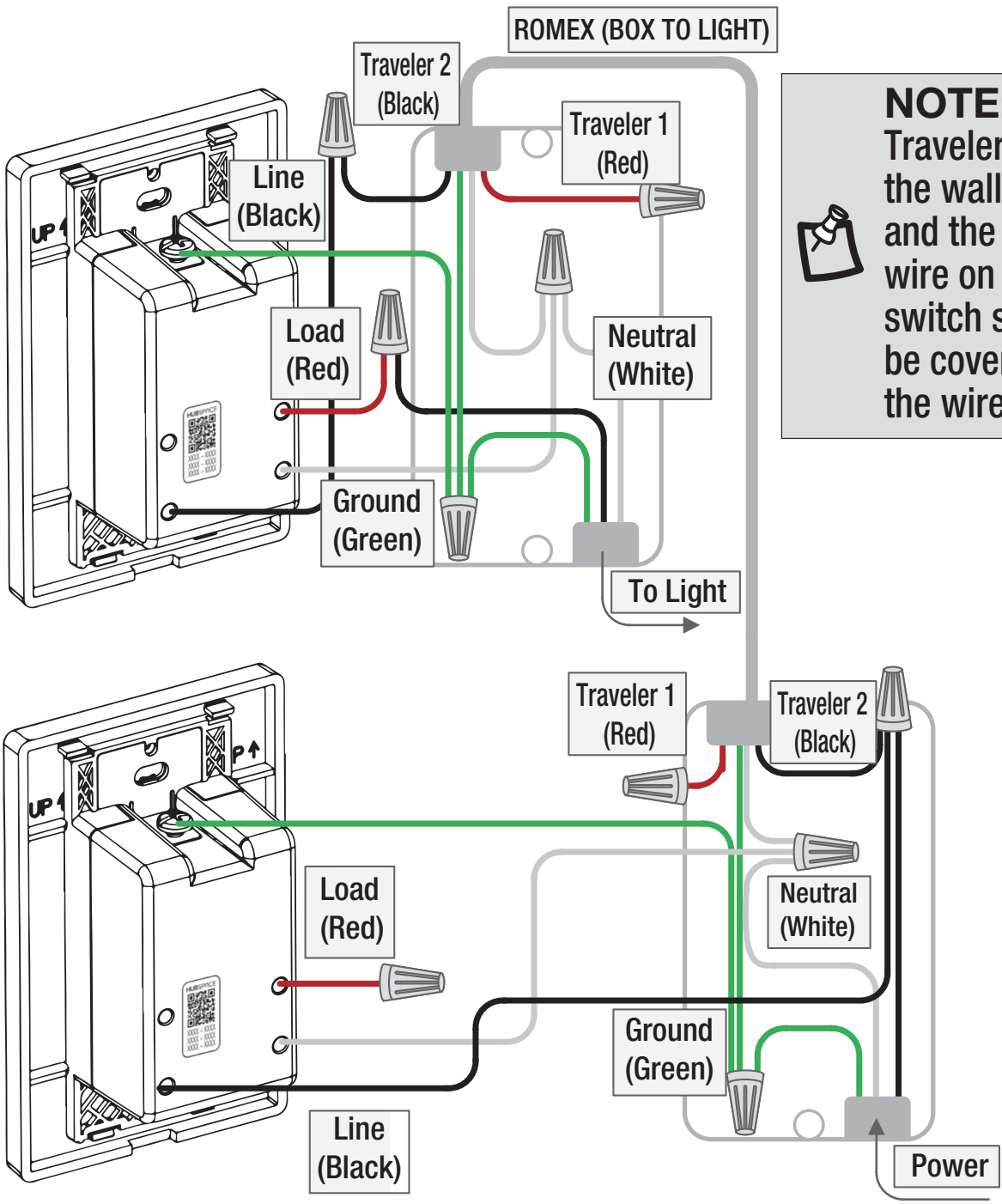

NOTE: The Traveler 1 on the wall box and the Load wire on the switch should be covered by the wire nut.

Installation (continued)

5 Mount the light switch with the screws (C) and attach Wall Plate (B).

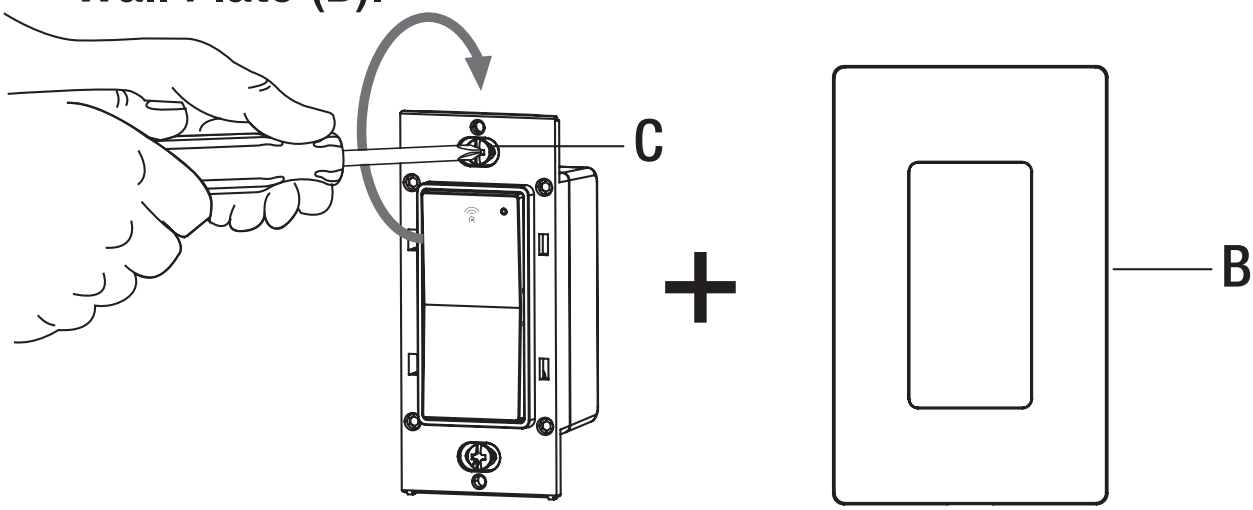

6 Turn power ON at the circuit breaker or fuse. Installation is complete.

Install the single pole light switch in a multi-gang application.

In multi-light switch installations, the reduction of the light switch's capacity may be required. Refer to below chart for maximum load per light switch.

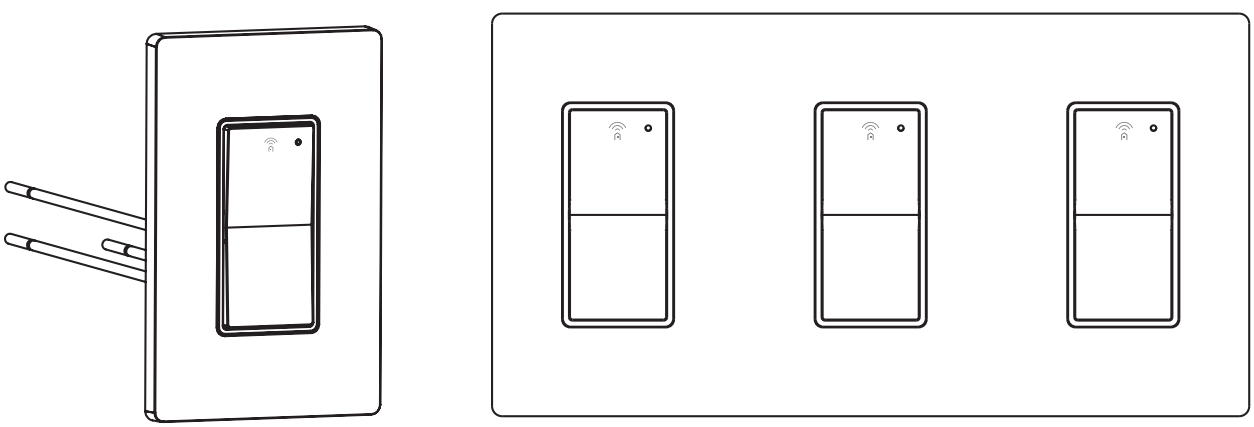

Installation (continued)

Maximum Load Per Light Switch for Multi-Gang			
Load Bulb	**Single**	**Two-Gang**	**Three-Gang**
LED/CFL	300W	300W	300W
Incandescent/ Halogen	600W	500W	500W

NOTE:
- No derating is required for LED or CFL bulb applications.

Operation

1 **Download the Hubspace™ app from the Apple App Store or the Google Play Store.**

Download on the App Store

GET IT ON Google Play

2 **Sign in if you have an account, or register to create an account then sign in.**

3 Connect your light switch to power and follow the instructions on the app screen.

NOTE:

- This Hubspace product requires a 2.4GHz Wi-Fi channel. Hubspace only shows Wi-Fi networks that your product can use.
- If you do not see your Wi-Fi network name when you attempt to connect your product, please check your router settings or move your product closer to your Wi-Fi router.

4 Tap the '+' button in the upper-right corner on the app screen to add your light switch.

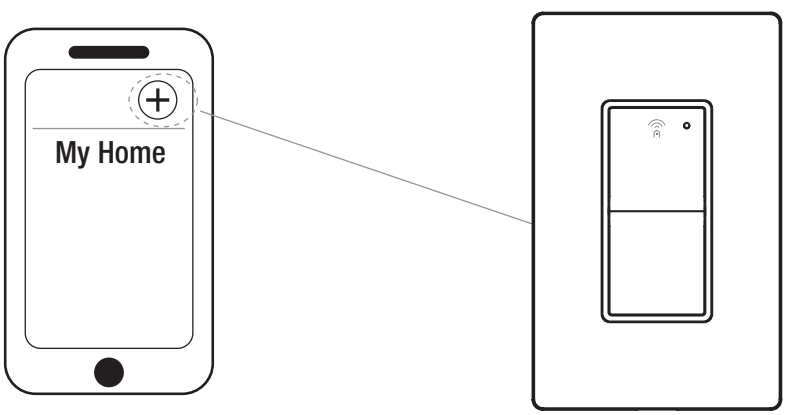

NOTE: Bluetooth® access is required for product setup. Android phones must also enable Location services to allow for Bluetooth scanning.

Operation (continued)

5 Scan the QR code on the light switch or in the Quick Start Guide.

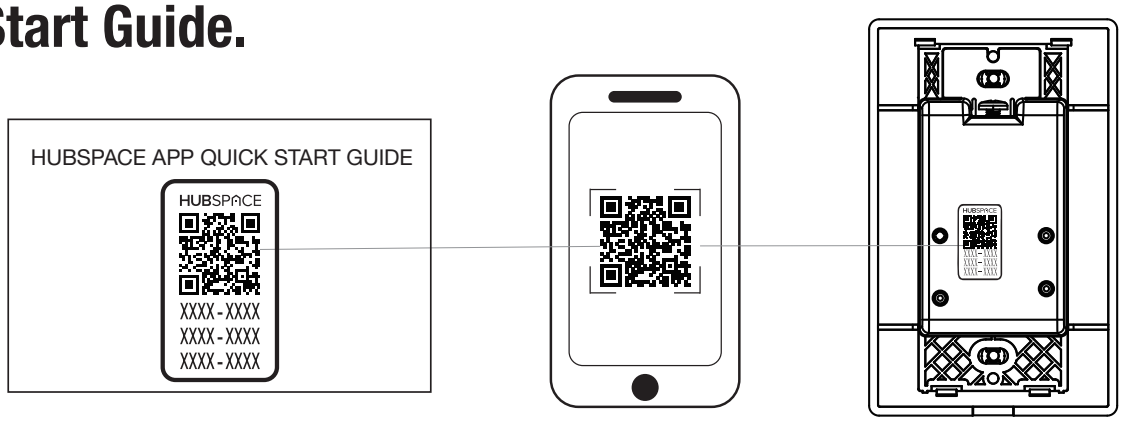

NOTE: If the QR code cannot be scanned, you can enter the code manually. Tap Enter Code and follow the instructions.
You can find the QR code either on the front side or the back side of light switch housing.

6 Using your Smart Light Switch.

- ☐ To turn your Smart Light Switch on or off, tap the On/Off button on the Hubspace Home Page.
- ☐ To set a schedule or timer, tap the name of the Smart Light Switch on the Hubspace Home page. You will see options for setting Schedules and Auto-Off Timers.
- ☐ You can also control the light manually by pressing the button on the Smart Light Switch.

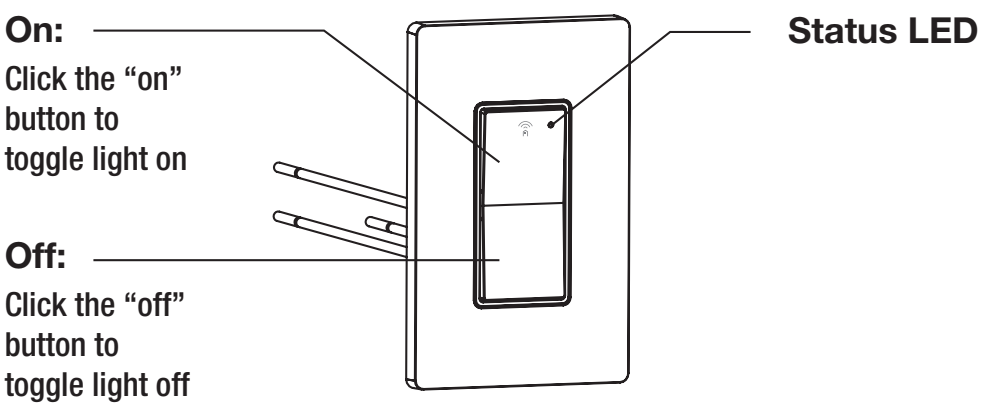

7 Control 3-Way

Add Devices:
Primary/Load Controlling Switch (Single Pole Switch)
Secondary/Remote Switch (Single Pole Switch)

When choosing 3 way kit installation, the secondary switch needs to join the primary switch's network. And add the secondary switch through the APP to complete the setup.

What to Expect During Setup Setting up?
Hubspace Connect is quick and guided in the Hubspace app. You'll start by choosing what type of products you want your switch to control—Hubspace smart products, non-smart lights, or a combination of both.

The app will then ask a few simple questions to understand whether those products are on the same circuit as the switch or on a different one. Next, you'll select the Hubspace products you want the switch to control from a list of devices already in your home. Once selected, the app confirms your setup and your switch is ready to use. After setup, you can turn connected Hubspace products on, off, or dim them directly from the wall switch or the app—even if they're located in another room or on a different circuit. You can update or change which products the switch controls at any time in the app.

8 Set up your Voice Assistant.

You can connect your Smart Light Switch to Google Home and Alexa from the Hubspace app. Or, you can sign in to the Alexa app or Google Home and connect to your Hubspace product from there.

Specification

Input	120VAC, 60Hz
Output	120VAC, 60Hz, Incandescent/Halogen 600W, CFL/LED 300W Maximum load
Network Wireless Type	2.4GHz, IEEE 802.11b/g/n
Operating Temperature	32° F(0°C)–104° F(40°C)
Operating Humidity	5-85% RH, Non-condensing
Certification	FCC, ETL

Care & Cleaning

- ☐ Clean the device with a soft, dry cloth.
- ☐ Do not use cleaners with chemicals, solvents, or harsh abrasives.

Troubleshooting

Problem	Solution
What product can be controlled with the Smart Light Switch?	Maximum total wattage rating: -Up to 300 total watts for LED and CFL -600W/120V for Incandescent/Halogen
Lights are flickering.	Loading bulb has a bad connection.
	Wires not secured firmly under terminal screws of switch.
Light or LED indicator do not turn ON.	Circuit breaker or fuse has tripped.
	Load bulb is burned out.
	Neutral connection of the loading bulb is not wired.
	Wiring error.
Could not control the light.	Make sure light switch is connected to the network.
	Make sure the wiring installation is correct.
My Hubspace product is not connecting to Wi-Fi.	Make sure your product is connected to a power source with correct wiring. Your internet connection or Wi-Fi network may be down.
My product cannot find any Wi-Fi networks.	Make sure you have a 2.4GHz capable Wi-Fi network within range of the product you are trying to add.
My product is in a location that does not have Wi-Fi. Can I still use it with the Hubspace app?	Yes. Use the app on a phone with an Internet connection like LTE. The phone must be within Bluetooth range of your Hubspace product and have Bluetooth enabled.

Troubleshooting (continued)

Problem	Solution
I cannot find the QR code.	It is on the light switch housing. A copy of the QR code is also included in your product's documentation
The QR code has become damaged. How do I add the product?	Under the QR code is a 24-digit code. You can enter those manually instead of scanning the code.
I lost my QR code. How do I add a product?	1. Make sure the product is connected to power. 2. In the Hubspace app, tap +, then Add Product. 3. On the Scan Product screen, tap the Search button in the lower-right corner. 4. Follow the on-screen instructions.
A product is on another account. How do I transfer it?	Scan the QR code and it will transfer to your account.
My product is offline for long periods of time.	Make sure your Wi-Fi signal strength is sufficient. You may need to move your router, use mesh Wi-Fi, or Wi-Fi extenders.
The product is on and I scanned the QR code, but the app cannot connect to it.	For Android phones, make sure Location is enabled because it is required for Bluetooth scanning. Turn off Bluetooth on your phone and turn it back on. Then, scan the QR code. If the problem persists, turn your phone off and on, then try again.
Can I scan the same QR code to add multiple products?	No. Each product has a unique QR code.

Commercial Electric™

Questions, problems, missing parts? Before returning to the store, call Hubspace Customer Service
8 a.m. - 7 p.m., EST, Monday-Friday, 9 a.m. - 6 p.m., EST, Saturday

1-877-592-5233

HOMEDEPOT.COM/Hubspace

Retain this manual for future use.