Georgia-Pacific

TOUGHROCK®

TECHNICAL GUIDE

GYPSUM BOARD

ToughRock® Product Overview

ToughRock® Gypsum Boards include paper-faced drywall panels for a wide range of interior and exterior applications, including fire-rated wall and ceiling assemblies, exterior sheathing, soffit and more. The standard-weight, 1/2" panel has been enhanced and now carries a fire rating with the introduction of ToughRock® Fireguard 45® Gypsum Board. Tested to achieve a 45-minute UL classified fire rating in select assemblies, the improved board readily replaces standard and lightweight 1/2" gypsum board in residential wall and ceiling construction.

Georgia-Pacific Gypsum and Sustainability

Georgia-Pacific Gypsum's definition of sustainability is meeting the needs of society today without jeopardizing our ability to do so in the future. We are committed to using resources efficiently to provide innovative products and solutions that meet the needs of customers and society, while operating in a manner that is environmentally and socially responsible, and economically sound.

We continue to focus on:

- Improving energy efficiency at our manufacturing plants
- Seeking out opportunities to reduce water use and to reuse water more efficiently
- Finding cost effective ways to further reduce air emissions
- Recovering and reusing materials that otherwise would end up in landfills

Green building codes, standards and programs are establishing themselves across the country. They promote the use of products that contribute to the performance of the building, along with minimizing environmental and human health impacts over the life of the building or home. Because we embrace product performance and operate in an environmentally, socially and economically sound manner, owners and architects can feel good about the structures they build using our products.

Many of our products contribute to LEED® and other green building codes, standards, or program credits or requirements. To find out more, please refer to www.gpgypsum.com for recycled content, regional materials, and low emitting materials information and use our online LEED calculator to calculate contribution for a specific credit. For general information on sustainability, visit www.buildgp.com/sustainability.

Table of Contents

Product Overview 2
Delivery, Handling and Storage 2
Board Calculator 3
Maximum Framing Spacing 3
Installation 4, 11, 18, 19, 27
Finishing 5
Physical Properties 6-9, 16
Recommendations and Limitations for Use 10, 14, 33
Fastening and Framing 12
Wall Applications 13
Soffit Applications 15
Shaftliner – Area Separation Wall 17
Assemblies 19-21
Details 22-25
Shaftwall/Stairwell Systems 26
Fire Rated Assemblies 27-29
Door Frame Details 30
Wall Frame Details 31
Rails/Chute/Beam Details 32
HVAC Duct Detail 33
Fire Rating Information 34

Delivery, Handling and Storage

All materials shall be delivered in original bundles bearing the brand name, if any; applicable standard designation; and name of the manufacturer or supplier for whom the product is manufactured. The plastic packaging used to wrap gypsum board products for rail and/or truck shipment is intended to provide temporary protection from moisture exposure during transit only and is not intended to provide protection during storage after delivery. Such plastic packaging shall be removed immediately upon receipt of the shipment. **WARNING:** Failure to remove protective plastic shipping covers can result in condensation which can lead to damage, including mold.

All materials should be kept dry. Gypsum board products shall be neatly stacked flat with care taken to prevent sagging or damage to edges, ends and surfaces. Gypsum board products and accessories shall be properly supported on risers on a level platform, and fully protected from weather, direct sunlight exposure, and condensation. Gypsum board products shall be stacked flat rather than on edge or end. **WARNING:** Gypsum board products stacked on edge or end can be unstable and present a serious hazard in the workplace should they accidentally topple.

Refer to *Handling and Storage of Gypsum Panel Products, GA-801*, for proper storage and handling requirements.

Reference: Application and Finishing of Gypsum Panel Products, GA-216, Gypsum Association.

ToughRock® Interior Gypsum Board Calculator

Determine the wall and ceiling areas:

Width of the room x Length of the room = Ceiling area
(Width + Length) x 2 x Height of the room = Wall area

For example, a 12′ x 16′ x 8′ room has a wall/ceiling area of 640 sq. ft.

Ceiling area: 12 x 16 = 192
Wall area: (12 + 16) x 2 x 8 = 448; 192 + 448 = 640.

Room Measurement Table

	4′	5′	6′	7′	8′	9′	10′	11′	12′	13′	14′	15′	16′
8′	224	248	272	296	320	334	368	392	416	440	464	488	512
9′	244	269	294	319	344	369	394	419	444	469	494	519	544
10′	264	290	316	342	368	394	420	446	472	498	524	550	576
11′	284	311	338	365	392	419	446	473	500	527	554	581	608
12′	304	332	360	388	416	444	472	500	528	556	584	612	640
13′	324	353	382	411	440	469	498	527	556	585	614	643	672
14′	344	374	404	434	464	494	524	554	584	614	644	674	704
15′	364	395	426	457	488	519	550	581	612	643	674	705	736
16′	384	416	448	480	512	544	576	608	640	672	704	736	768

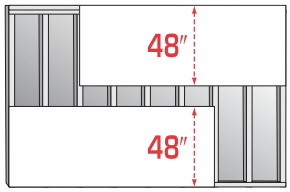

48″ (1220 mm) wide ToughRock® Gypsum Board; 9′ (2.74 m) high framing

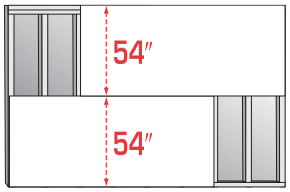

54″ (1372 mm) wide ToughRock® Gypsum Board; 9′ (2.74 m) high framing

In addition to standard 4′ widths, ToughRock® Gypsum Board is also available in a 54″ width that eliminates the need for gap filler boards in horizontal applications when walls are 9′ high (see above illustration). Using 54″ wide gypsum board when you have 9′ ceilings reduces the number of seams you'll need to finish and cuts waste.

Board Coverage Table (in sq. ft. of wall area)

	1 Board	2 Boards	3 Boards	4 Boards	5 Boards	6 Boards
4′ x 8′ Board	32	64	96	128	160	192
4′ x 9′ Board	36	72	108	144	180	216
4′ x 10′ Board	40	80	120	160	200	240
4′ x 12′ Board	48	96	144	192	240	288
4′ x 14′ Board	56	112	168	224	280	336
4′ x 16′ Board	64	128	192	256	320	384

Estimating Gypsum Board Fasteners

Type of Fastener	Wallboard Thickness	Length of Fastener	Approx. Number of Fasteners per 1000 sq. ft. of Wallboard
Nail	1/2″ (12.7 mm)	1 3/8″ (35 mm)	2000
Nail	5/8″ (15.9 mm)	1 1/2″ (38 mm)	2000
Screw	1/2″ (12.7 mm)	1 1/8″ (28 mm)	1250
Screw	5/8″ (15.9 mm)	1 1/4″ (32 mm)	1250

Estimating All-Purpose Joint Compound and Tape

ToughRock® Wallboard Sq. Ft.	All-Purpose Joint Compound	Estimated Amount of Wallboard Tape
100–200 sq. ft.	12 lb. Pail	two 60′ rolls
500 sq. ft.	48 lb. Carton	one 250′ roll
800 sq. ft.	61.7 lb. Pail	two 250′ rolls

Maximum Framing Spacing for Single-Ply Construction[1]

Single-Ply ToughRock® Gypsum Board Thickness		Application[3]	Maximum Framing Members Spacing
Ceilings:	3/8″ (9.5 mm)[4]	perpendicular	16″ (406 mm)
	1/2″ (12.7 mm)	perpendicular or parallel	16″ (406 mm)
	5/8″ (15.9 mm)	parallel	16″ (406 mm)
	1/2″ (12.7 mm)	perpendicular[2] or parallel	24″ (610 mm)
	5/8″ (15.9 mm)	perpendicular	24″ (610 mm)
Walls:	3/8″ (9.5 mm)	perpendicular or parallel	16″ (406 mm)
	1/2″ (12.7 mm)	perpendicular or parallel	24″ (610 mm)
	5/8″ (15.9 mm)	perpendicular or parallel	24″ (610 mm)

[1] *Installed in accordance with ASTM C840.*

[2] *ToughRock® Gypsum Board ceilings to receive hand or spray-applied water-based texture material shall be applied perpendicular to framing and shall be either (i) 1/2″ (12.7 mm) ToughRock® Gypsum Board applied to framing not more than 16″ (406 mm) o.c. or (ii) 5/8″ ToughRock® Gypsum Board applied to framing not more than 24″ (610 mm) o.c.*

[3] *Nails for ToughRock® Gypsum Board applied over existing surfaces shall have a flat head and diamond point, and shall penetrate not less than 7/8″ (22 mm), nor more than 1-1/4″ (32 mm) into the framing member.*

[4] *3/8″ (9.5 mm) single-ply ToughRock® Gypsum Board shall not be applied to ceilings where the gypsum board supports insulation.*

Interior Gypsum Board Installation

ToughRock® Gypsum Board products should be installed according to the most current versions of Gypsum Association GA-216 "Application and Finishing of Gypsum Panel Products" and ASTM C840 "Standard Specification for Application and Finishing of Gypsum Board for Non-Fire Rated Construction."

Walls

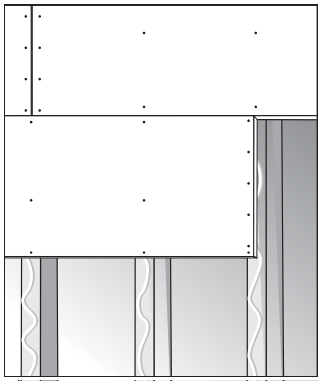

Several methods are used to attach gypsum boards to the framing including fasteners, adhesives, and fasteners and adhesives together. Nails are often used to install wallboard to wood studs. Nails should be spaced not more than 8" (203 mm) o.c. along framing members. Screws may also be used to install wallboard on wood studs and are standard for steel studs. Screws shall be spaced not more than 16" (406 mm) on walls where framing membranes are 16" (406 mm) o.c. or spaced not more than 12" (305 mm) where the framing members are 24" (610 mm) o.c.

Gypsum wallboard may also be attached by using adhesive. Use a caulking gun to put a 3/8" (10 mm) bead of gypsum board adhesive on the wall studs before installing the board. Then fasten the board around the edges, 16" o.c. (406 mm) for studs spaced 16" (406 mm) o.c. and along the ends. This improves bond strength and reduces the number of fasteners needed.

Gypsum board may be hung perpendicular or parallel to the framing members. If perpendicular, start at the top of the wall and attach the top boards first and work down the wall. Perpendicular orientation is often preferred because it generally reduces the number of joints that need to be finished. Please refer to the specific fire-rated assembly (if required) for construction details.

Ceilings

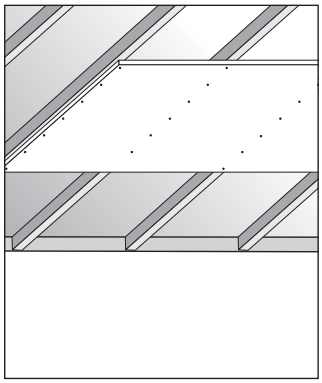

Apply gypsum boards to the ceiling before applying gypsum boards to the walls. Joists must not be spaced more than 24" (610 mm) o.c. For residential applications use 1/2" (12.7 mm) ToughRock® Fireguard 45® Gypsum Board, 1/2" (12.7 mm) ToughRock® Lite-Weight Gypsum Board or 1/2" (12.7 mm) ToughRock® Span 24® Ceiling Boards as a sag resistant alternative to 1/2" (12.7 mm) traditional ToughRock® Gypsum Boards. These boards are formulated to support textures and are able to support the same amount of insulation weight as 5/8" (15.9 mm) ToughRock® Fireguard X® Gypsum Boards. Joists spaced 24" (610 mm) should only receive 1/2" (12.7 mm) ToughRock® Lite-Weight Gypsum Board, 1/2" (12.7 mm) ToughRock® Span 24® Ceiling Boards, 1/2" (12.7 mm) ToughRock® Fireguard 45® Gypsum Board or 5/8" (15.9 mm) ToughRock® Fireguard X® Gypsum Boards. These products may be applied either parallel or perpendicular to the ceiling framing. The maximum insulation load should be not more than 2.2 lbs/sq. ft. (10.7 kg/m^2). Space nails not more than 7" (178 mm) or space screws not more than 12" (305 mm) o.c. Please refer to the framing spacing requirements on page 12.

Improper framing construction and alignment can cause problems during finishing. Excessive moisture or insulation weight can cause the ceiling boards to sag.

Masonry

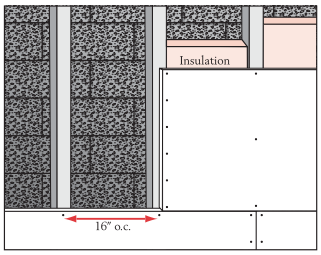

Only interior masonry, concrete or brick walls above grade shall be acceptable masonry substrates for direct adhesion. Masonry, concrete or brick surfaces to which ToughRock® products are to be adhered to shall be free from foreign matter, projections or depressions that will impair bond.

Another recommendation is that the wall be framed with studs or furring strips, either 16" (406 mm) or 24" (610 mm) o.c. The furring strips can either be 1" (25 mm) x 2" (51 mm) or 2" (51 mm) x 2" (51 mm). Furring strips are necessary if the wall is to be insulated. Rigid foam is typically used to insulate the cavity. Gypsum boards may then be applied as described in the wall section above.

Corner Bead

Metal, vinyl or paper corner beads provide strong, durable protection for outside angle corners, uncased openings, beams and soffits. The exposed portion of the corner bead resists impact and forms a surface to finish. Corner bead should be installed in one piece. Corner beads, depending on the type, may be nailed, crimped or embedded in place with drywall joint compound.

Finishing Interior Gypsum Board

Joints/Levels of Finish

Please refer to the *Recommended Levels of Gypsum Board Finish*, Gypsum Association publication GA-214, for recommendations of various levels of finish of gypsum board surfaces prior to the application of specific types of final decoration. The recommended levels of finish of gypsum board surfaces varies with the final decoration and can also be dependent on the location of the boards in the structure and the type of illumination striking the surface. Also, visit the Drywall Finishing Council's website at www.dwfc.org for further information about joints and finishing gypsum boards.

Taping

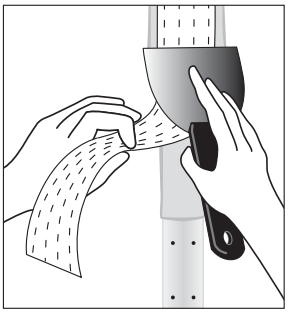

No fasteners should protrude above the surface of the gypsum board. Apply a smooth, full, even coat of all-purpose joint compound into the recess created by the tapered edges of adjoining boards with a joint finishing knife. Center a strip of wallboard tape over the joint, and press it firmly into the wet taping compound with a wallboard knife at a 45° angle. Press hard enough to squeeze excess compound out from under the tape, but leave enough compound for a good bond. Pull the wallboard knife back over the tape, drawing the excess compound back over the surface of the tape. The top of the tape should be covered with a thin layer of compound. Allow to dry.

Bedding and Finishing

When the taping coat is dry, use a 6" (152 mm) joint finishing knife to apply the second bedding coat of all-purpose joint compound. Feather the edges and allow to dry. Then apply a final finish coat with a 10" (254 mm) joint finishing knife, extending this coat 2" (51 mm) wider than the bedding coat. Allow to dry, and sand lightly with a medium grit sandpaper. Avoid sanding down to the tape. Care should be taken to avoid sanding or scratching the face paper of the wallboard. Remove joint compound dust prior to decoration.

Fastener Heads

Install fasteners at least 3/8" (10 mm) from the edge and end of the boards. Fasteners should be installed perpendicular to the face of the gypsum board. Seat nails in a shallow dimple left by the hammer head; do not crush the gypsum core or break the paper. Drywall screws should be applied with a screw gun with an adjustable screw-depth control head and a Phillips head bit. The screw head should be driven slightly below the face of the gypsum boards. Care should be taken to avoid breaking the face paper. For proper nail and screw spacing requirements, please refer to the Maximum Framing Spacing chart on page 3.

Butt Joints

Butt joints (square cut edge joints) are finished in a similar manner as regular joints. Because butt joints are not tapered, care is needed to not allow the joint compound and tape to build up any more than necessary. To reduce the effect of the build-up, feather the edges of the finish coat to a width twice or more that of a tapered edge joint.

Outside Corner

Be sure the metal or paper cornerbead is attached firmly. Use a 5" (127 mm) joint finishing knife to spread all-purpose joint compound about 3" (76 mm) or 4" (102 mm) past the metal or paper corner. Be sure to cover the edges. Allow to dry. Apply second coat with a 10" (254 mm) knife. Sand lightly when dry. A third coat may be needed.

Inside Corner

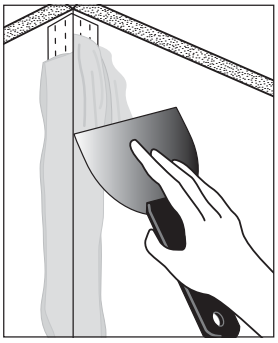

Cut a strip of wallboard tape the length of the corner to be finished. Crease the tape down the center. Use a 5" (127 mm) joint finishing knife to spread all-purpose joint compound about 2" (51 mm) on both sides of the corner. With the knife press the tape into the corner. Use enough pressure to squeeze some compound from under the tape, leaving enough compound to form a good bond. Feather the compound 2" (51 mm) from the edge of the tape. Allow to dry, finishing only one side at a time. Let dry, finish other side of corner. Let dry, then sand. Be careful not to let the joint compound build up in the corner of the tape. Excess compound in the corner could cause hairline cracks.

ToughRock® Gypsum Board Physical Properties

Properties		ASTM Test Method	1/4" ToughRock® Gypsum Board	3/8" ToughRock® Gypsum Board	1/2" ToughRock® Fireguard 45® Gypsum Board	1/2" ToughRock® Lite-Weight Gypsum Board
Thickness[2], nominal inches (mm) ± 1/64" (0.4 mm)		C473 B	1/4 (6.4)	3/8 (9.5)	1/2 (12.7)	1/2 (12.7)
Width[2], nominal inches (mm) - 3/32" (2.4 mm)			48 (1219)	48 (1219)	48 (1219) 54 (1372)	48 (1219) 54 (1372)
Length, standard feet (mm) ± 1/4" (6.4 mm)			8 (2438) to 12 (3658)	8 (2438) to 12 (3658)	8 (2438) to 16 (4876)	8 (2438) to 16 (4876)
Edges[2]			Tapered or square	Tapered or square	Tapered	Tapered
Surfacing			100% recycled paper face, back and long edges	100% recycled paper face, back and long edges	100% recycled paper face, back and long edges	100% recycled paper face, back and long edges
Packaging			Two pieces per bundle, face-to-face and end taped	Two pieces per bundle, face-to-face and end taped	Two pieces per bundle, face-to-face and end taped	Two pieces per bundle, face-to-face and end taped
Flexural Strength,[2] min.	Parallel, lbf. (N)	C473 B	≥16 (71)	≥26 (116)	≥36 (160)	≥36 (160)
	Perpendicular, lbf. (N)	C473 B	≥46 (205)	≥77 (343)	≥107 (476)	≥107 (476)
R Value[1], $ft^2 \bullet °F \bullet hr/BTU$ ($m^2 \bullet K/W$)		C177 at 75°F	0.22 est. (0.04)	0.33 (0.06)	0.45 (0.08)	0.45 (0.08)
Nail Pull Resistance,[2] Min., lbf. (N)		C473 B	≥36 (160)	≥56 (249)	≥77 (343)	≥77 (343)
Hardness,[2] lbf. (N) (core edge & end)		C473 B	≥15 (67)	≥15 (67)	≥15 (67)	≥15 (67)
Humidified Deflection[2] inches (mm)		C473 B	Not applicable	15/8 (48)	10/8 (32)	10/8 (32)
Surface Burning Characteristics[3] (per ASTM E84)	Flame Spread	E84	15	15	15	15
	Smoke Developed	E84	0	0	0	0
Non Combustibility		E136	Pass	Pass	Pass	Pass

[1] Per Gypsum Association document GA-235.
[2] Specified minimum values are as defined in ASTM C1396.
[3] Products qualify for NFPA Class A or IBC Class 1.

CAUTION: For product fire, safety and use information, go to buildgp.com/safetyinfo.

ToughRock® Fireguard X® Gypsum Board Physical Properties

Properties		ASTM Test Method	5/8" ToughRock® Lite-Weight Fire-Rated Gypsum Board	5/8" ToughRock® Fireguard X® Gypsum Board	1/2" ToughRock® Fireguard C® Gypsum Board	5/8" ToughRock® Fireguard C® Gypsum Board
Thickness[2], nominal inches (mm) ± 1/64" (0.4 mm)		C473 B	5/8 (15.9)	5/8 (15.9)	1/2 (12.7)	5/8 (15.9)
Width[2], nominal inches (mm) - 3/32" (2.4 mm)			48 (1219) 54 (1372)	48 (1219) 54 (1372)	48 (1219)	48 (1219)
Length, standard feet (mm) ± 1/4" (6.4 mm)			8 (2438) to 14 (4267)	8 (2438) to 14 (4267)	8 (2438) to 14 (4267)	8 (2438) to 14 (4267)
Edges[2]			Tapered, square, or tapered with rounded edges	Tapered, square, or tapered with rounded edges	Tapered, square, or tapered with rounded edges	Tapered, square, or tapered with rounded edges
Packaging			Two pieces per bundle, face-to-face and end taped	Two pieces per bundle, face-to-face and end taped	Two pieces per bundle, face-to-face and end taped	Two pieces per bundle, face-to-face and end taped
Flexural Strength,[2] min.	Parallel, lbf. (N)	C473 B	≥ 46 (205)	≥ 46 (205)	≥ 36 (160)	≥ 46 (205)
	Perpendicular, lbf. (N)	C473 B	≥ 147 (654)	≥ 147 (654)	≥ 107 (476)	≥ 147 (654)
R Value[1], ft^2•°F•hr/BTU (m^2•K/W)		C177 at 75°F	0.56 est. (0.10)	0.56 est. (0.10)	0.48 est. (0.08)	0.56 est. (0.10)
Nail pull resistance[2] minimum lbf. (N)		C473 B	≥87 (387)	≥87 (387)	≥77 (343)	≥87 (389)
Hardness,[2] lbf. (N) (core edge and end)		C473 B	≥15 (67)	≥15 (67)	≥15 (67)	≥15 (67)
Humidified Deflection[2] inches (mm)		C473 B	5/8 (16)	5/8 (16)	10/8 (32)	5/8 (16)
Surface Burning Characteristics[3] (per ASTM E84)	Flame Spread	E84	15	15	15	15
	Smoke Developed	E84	0	0	0	0
Non Combustibility		E136	Pass	Pass	Pass	Pass

[1] Per Gypsum Association document GA-235.
[2] Specified minimum values are as defined in ASTM C1396.
[3] Products qualify for NFPA Class A or IBC Class 1.

ToughRock® Mold-Guard™ Gypsum Board Physical Properties

Properties		ASTM Test Method	1/2" ToughRock® Mold-Guard™ Gypsum Board	5/8" ToughRock® Fireguard X® Mold-Guard™ Gypsum Board	5/8" ToughRock® Fireguard X® Mold-Guard™ Abuse-Resistant Gypsum Board
Thickness[2], nominal inches (mm) ± 1/64" (0.4 mm)		C473 B	1/2 (12.7)	5/8 (15.9)	5/8 (15.9)
Width[2], nominal inches (mm) - 3/32" (2.4 mm)			48 (1219)	48 (1219) 54 (1372)	48 (1219)
Length, standard feet (mm) ± 1/4" (6.4 mm)			8 (2438) to 16 (4876)	8 (2438) to 14 (4267)	8 (2438 mm) to 12 (3658 mm)
Edges[2]			Tapered, square, or tapered with round edges	Tapered, square, or tapered with round edges	Tapered edge
Surfacing			100% recycled paper face, back and long edges	100% recycled paper face, back and long edges	100% recycled paper face, back and long edges
Packaging			Two pieces per bundle, face-to-face and end taped	Two pieces per bundle, face-to-face and end taped	Two pieces per bundle, face-to-face and end taped
Flexural Strength,[2] min.	Parallel, lbf. (N)	C473 B	≥ 36 (160)	≥ 46 (205)	≥ 46 (205)
	Perpendicular, lbf. (N)	C473 B	≥ 107 (476)	≥ 147 (654)	≥ 147 (654)
R Value[1], ft^2•°F•hr/BTU (m^2•K/W)		C177 at 75°F	0.45 (0.08)	0.56 est. (0.10)	0.56 est. (0.10)
Nail pull resistance,[2] Min., lbf. (N)		C473 B	≥77 (343)	≥87 (387)	≥87 (387)
Hardness,[2] lbf. (N) (core edge and end)		C473 B	≥15 (67)	≥15 (67)	≥15 (67)
Humidified Deflection[2]		C473 B	10/8" (32 mm)	5/8" (16 mm)	5/8" (16 mm)
Surface Burning Characteristics[3] (per ASTM E84)	Flame Spread	E84	15	15	15
	Smoke Developed	E84	0	0	0
Non Combustibility		E136	Pass	Pass	Pass

[1] Per Gypsum Association document GA-235.
[2] Specified minimum values are as defined in ASTM C1396.
[3] Products qualify for NFPA Class A or IBC Class 1.

ToughRock® Specialty Gypsum Board Physical Properties

Properties		ASTM Test Method	1/2" ToughRock® Span 24® Ceiling Board	1/2" ToughRock® Lite-Weight Veneer Plaster Base	5/8" ToughRock® Fireguard X® Veneer Plaster Base
Thickness[2], nominal inches (mm) ± 1/64" (0.4 mm)		C473 B	1/2 (12.7)	1/2 (12.7)	5/8 (15.9)
Width[2], nominal inches (mm) - 3/32" (2.4 mm)			48 (1219)	48 (1219)	48 (1219)
Length, standard feet (mm) ± 1/4" (6.4 mm)			8 (2438) to 12 (3658)	8 (2438) to 12 (3658)	8 (2438) to 12 (3658)
Edges[2]			Tapered, or tapered with round edges	Tapered	Tapered
Surfacing			100% recycled paper coverings on face, back and long edges	100% recycled paper coverings on face, back and long edges	100% recycled paper coverings on face, back and long edges
Packaging			Two pieces per bundle, face-to-face and end taped	Two pieces per bundle, face-to-face and end taped	Two pieces per bundle, face-to-face and end taped
Flexural Strength,[2] min.	Parallel, lbf. (N)	C473 B	≥ 36 (160)	≥ 36 (160)	≥ 46 (205)
	Perpendicular, lbf. (N)	C473 B	≥ 107 (476)	≥ 107 (476)	≥ 147 (654)
R Value[1], ft^2•°F•hr/BTU (m^2•K/W)		C177 at 75°F	0.45 (0.08)	0.45 (0.08)	0.56 (0.10)
Nail pull resistance,[2] Min., lbf. (N)		C473 B	≥77 (343)	≥77 (343)	≥87 (387)
Hardness,[2] lbf. (N) (core edge and end)		C473 B	≥15 (67)	≥15 (67)	≥15 (67)
Humidified Deflection[2]		C473 B	5/16" (8 mm)	10/8" (32 mm)	5/8" (16 mm)
Surface Burning Characteristics[3] (per ASTM E84)	Flame Spread	E84	15	15	15
	Smoke Developed	E84	0	0	0
Non Combustibility		E136	Pass	Pass	Pass

[1] Per Gypsum Association document GA-235.
[2] Specified minimum values are as defined in ASTM C1396.
[3] Products qualify for NFPA Class A or IBC Class 1

Interior Gypsum Board Recommendations and Limitations for Use

The following recommendations and limitations are important to ensure the proper use and benefits of ToughRock® Gypsum Board. Failure to strictly adhere to such recommendations and limitations may void the limited warranty provided by Georgia-Pacific Gypsum for such product. For additional details, please go to www.gpgypsum.com and select ToughRock Gypsum Board.

ToughRock® Gypsum Board

1. ToughRock Gypsum Board products shall be stored flat and in an area that protects from direct sunlight exposure, condensation, inclement weather and other forms of moisture.
2. Job site conditions that expose ToughRock Gypsum Boards to water or moisture must be avoided. The product shall be kept dry throughout application.
3. Failure to remove protective plastic shipping covers may result in condensation which can lead to damage, including mold.
4. ToughRock Gypsum Boards are not recommended for use where they will be exposed to sustained temperature of more than 125°F (52°C) for extended periods of time.
5. When ToughRock is mechanically attached, the room temperature shall be maintained at not less than 40°F (4°C) and not less than 50°F (10°C) for adhesive application of ToughRock and for joint treatment, texturing, and decoration.
6. ToughRock Gypsum Boards applied to walls shall be applied with the bottom edge spaced a minimum of 1/4" (6 mm) above the floor.
7. During periods of cold or damp weather, when vapor retarder sheeting is installed on ceilings behind gypsum board product, the ceiling batt or blanket insulation shall be installed BEFORE the ToughRock Gypsum Boards are installed. Failure to follow this procedure creates a potential for moisture condensation on the backside of the ToughRock board and possible ceiling sag.
8. When loose-fill insulation is used above the ceiling, the attic insulation shall be installed immediately after the ceiling board is applied and before the ToughRock Gypsum Board joints are taped or any other wet finishing begins on the wall or ceiling.
9. Water-based textures, interior finishing materials and high ambient humidity conditions can produce sag in gypsum ceiling boards if adequate vapor and moisture control is not provided. The following precautions must be observed to minimize sagging of ceiling boards:
   a) Where a vapor retarder is required in cold weather conditions, the temperature of the gypsum ceiling boards and vapor retarder must remain above the interior air dew point temperature during and after the installation of boards and finishing materials.
   b) The interior space must be adequately ventilated and air circulation must be provided to remove water vapor from the structure. Most sag problems are caused by the absorption of moisture by the gypsum board. The placement of vapor retarders, insulation levels and ventilation requirements will vary by location and climate and shall be reviewed by a qualified engineer if in question.

ToughRock® Gypsum Sheathing

ToughRock Gypsum Sheathing is recommended for use in residential or commercial buildings as a substrate that is covered by cladding such as vinyl or fiber cement siding, masonry veneer, or wire lath stucco. It is designed for direct mechanical attachment to wood or steel framing.

Sheathing Installation Instructions

- ToughRock Gypsum Sheathing must be installed in accordance with the instructions in this brochure, and Gypsum Association documents GA-253, GA-254 and ASTM C1280. ToughRock Gypsum Sheathing can be attached parallel or perpendicular to wood or metal framing. Use appropriate board orientation for specific fire-rated assemblies and shear wall applications within this document, other reference documents or as required by the design authority. The framing width shall not be less than 1-1/2" (38 mm) wide for wood framing and 1-1/4" (32 mm) for steel framing. Framing members shall not vary more than 1/8" (3 mm) from the plane of the faces of adjacent framing.
- Fasteners shall be driven flush with the board surface (not countersunk) and into the framing system. Locate fasteners at least 3/8" (9 mm) from the ends and edges of the sheathing. Nails or screws, as listed in the fastener chart, may be used to attach ToughRock Gypsum Sheathing to framing. When a pneumatic fastening system into metal framing is used to attach ToughRock Gypsum Sheathing, consult with the pneumatic tool manufacturer for application specifications. ToughRock Gypsum Sheathing is not to be used as a base for nailing or other fastening.
- Install ToughRock Gypsum Sheathing with end joints staggered on horizontal applications. Ends and edges of the sheathing should be in moderate contact. ToughRock Gypsum Sheathing boards shall not be less than 7" (178 mm) from the finish grade in fully weather- and water-protected siding systems, and not less than 12" (305 mm) from the ground for properly drained and ventilated crawl spaces. Consult with the design authority for control joint recommendations.
- When a specific fire rating or STC value is required, it may require a more stringent fastening pattern, longer fasteners, or a specific board orientation. Please follow installation instructions that have the most stringent requirements to ensure the sheathing meets all requirements of the project.

Fastening and Framing

Thickness	Framing Spacing	Panel Orientation	Fastener Spacing – Wood Framing[3]	Fastener Spacing – Metal Framing[3]
1/2" (12.7 mm)	24" (610 mm) o.c. max[2]	Parallel[2] or Perpendicular	8" (203 mm) o.c. field[1] & perimeter	8" (203 mm) o.c. along framing
5/8" (15.9 mm)	24" (610 mm) o.c. max[2]	Parallel[2] or Perpendicular	8" (203 mm) o.c. field[1] & perimeter	8" (203 mm) o.c. along framing

1. Fastener spacing around the perimeter of the wall and along intermediate vertical wood framing members. To meet the racking shear strength listed in the physical properties table, fastener spacing is 4" (102 mm) o.c. around the perimeter of each board and 8" (203 mm) o.c. along vertical framing members.

2. For racking strength resistance, apply board edges parallel with framing spaced a maximum of 16" (406 mm) o.c. for both 1/2" (12.7 mm) and 5/8" (15.9 mm) ToughRock Sheathing.

3. Fire-rated assemblies may require additional fasteners, see specific assembly details.

Fastener*	Length		Description	Application
	1/2" (12.7 mm) Thick Sheathing	5/8" (15.9 mm) Thick Sheathing		
	1" (25 mm)	1-1/4" (32 mm)	Bugle head fine thread, corrosion-resistant drill point drywall screw	ToughRock® Gypsum Sheathing to heavy-gauge steel (18 gauge or thicker)
	1" (25 mm)	1-1/4" (32 mm)	Bugle head fine thread, corrosion-resistant sharp point drywall screw	ToughRock Gypsum Sheathing to light-gauge metal framing furring (20-25 gauge)
	1-1/4" (32 mm)	1-5/8" (41 mm)	Bugle head, rust-resistant, coarse thread sharp point screw	ToughRock Gypsum Sheathing to wood framing
	1-1/4" (32 mm)	1-1/4" (32 mm) metal 1-5/8" (41 mm) wood	Wafer head, corrosion-resistant screws, drill or sharp point	ToughRock Gypsum Sheathing to heavy-gauge or light-gauge, metal or wood, respectively
	1-1/2" (38 mm)	1-3/4" (45 mm)	11-gauge, galvanized nail	ToughRock Gypsum Sheathing to wood framing or equivalent

**For screws, meet or exceed ASTM C1002 or C954. Contact fastener manufacturer for correct amount of corrosion resistance.*

Wall Applications

Installing Cladding over ToughRock® Gypsum Sheathing

Most conventional exterior sidings and wall coverings—including wood, vinyl, composition, metal, stone, brick, wood shingles, shakes and plywood boards—may be applied over ToughRock Gypsum Sheathing. Consult your local building codes for water resistive barriers (WRB) requirements.

A. ToughRock Gypsum Sheathing
B. Insulation
C. Framing
D. Water-Resistive/Air Barrier
E. Masonry Tie
F. 2" (50 mm) Max. Air Space
G. Brick Masonry or Stone Veneer
H. Flashing and Weeps
I. Wood Shingles or Shakes
J. Plywood Siding
K. Vinyl Siding
L. Fiber Cement Siding
M. Metal Siding
N. Paper-Backed Metal Lath
O. Conventional Stucco
P. Minimum 1/4" (6 mm) Gap

Important: Illustrations not intended for design or specification purposes.

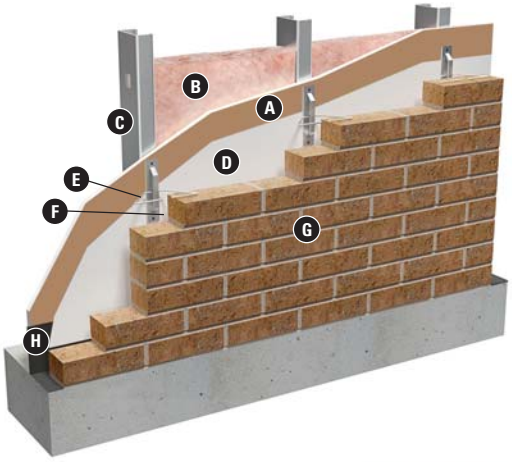

Brick Cavity Wall

Masonry or stone veneer can be applied over ToughRock Gypsum Sheathing just as it would be over any other type of sheathing. Attach the masonry ties securely through the boards and into the steel or wood framing. Space the ties as required by masonry courses. Apply water-resistive/air barrier as required by building code or design authority.

Shingles, Shakes, Vinyl, Metal, Wood, Fiber Cement Siding

ToughRock Gypsum Sheathing can be used in applications such as under wood shakes or shingles, plywood panel siding or other horizontal siding applications. All siding must be attached through the ToughRock Gypsum Sheathing and into the steel or wood framing. Apply water-resistive/air barrier as required by building code or design authority.

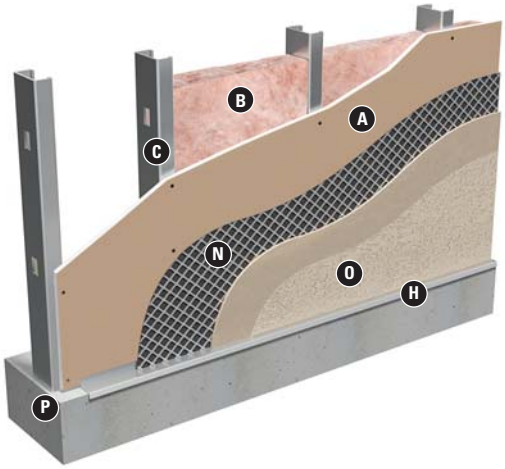

Conventional Stucco

Stucco systems may be applied over ToughRock Gypsum Sheathing using paper-backed metal lath. Paper-backed metal lath must be mechanically attached through the ToughRock Gypsum Sheathing into the steel or wood framing. Install stucco system in accordance with the manufacturer's instructions, the Portland Cement Association guidelines and local building code requirements.

Sheathing Recommendations and Limitations for Use

The following recommendations and limitations are important to ensure the proper use of ToughRock Gypsum Sheathing. Failure to strictly adhere to such recommendations and limitations may void the limited warranty provided by Georgia-Pacific Gypsum for such product. For additional details, please go to www.buildgp.com/warranties and select ToughRock Gypsum Board for warranty information.

Avoid any condition that will create moisture in the air and condensation on the exterior walls during periods when the exterior temperature is lower than the interior. The use of temporary forced air heaters creates volumes of water vapor which, when not properly vented, can condense on building materials. The use of these heaters and any resulting damage is not the responsibility of Georgia-Pacific Gypsum. Consult heater manufacturer for proper use and ventilation.

Georgia-Pacific Gypsum does not warrant and is not responsible or liable for the performance of any cladding, coating, finishes, coverings or other materials or exterior systems applied over ToughRock Gypsum Sheathing. The suitability and compatibility of any system is the responsibility of the system manufacturer or design authority.

Brackets to support heavy cladding such as tile and marble should not be installed over ToughRock Gypsum Sheathing.

Do not laminate ToughRock Gypsum Sheathing to masonry surfaces; use furring strips or framing.

ToughRock Gypsum Sheathing is not intended for roof applications. For roof applications, consult our DensDeck® Roof Board brochure.

ToughRock Gypsum Sheathing is not intended for interior or exterior tile applications. For interior tile applications, consult our DensShield® Tile Backer brochure.

ToughRock Gypsum Sheathing should not be used in lieu of plywood where required.

Do not apply ToughRock Gypsum Sheathing below grade.

For all installations, design details such as fasteners, sealants and control joints per system specifications must be properly installed. Openings and penetrations must be properly flashed and sealed. Failure to do so will void the warranty.

Do not use ToughRock Gypsum Sheathing as a base for nailing or mechanical fastening. Fasteners should be flush to the face of the board, not countersunk.

ToughRock Gypsum Sheathing is not intended for long-term exposure to the weather. Local weather conditions will dictate the length of time sheathing may be left exposed. The sheathing should be covered by an exterior finish cladding, or building felt, or equivalent protection if weather conditions will be severe during construction.

While GA-253 states the board may be left exposed to the elements for up to one month, Georgia-Pacific Gypsum does not offer an exposure warranty for ToughRock Gypsum Sheathing. If an exposure warranty is required, consult our DensGlass® Sheathing brochure.

Soffit Applications, Fastening, Framing and Finishing

ToughRock® Soffit Board is used for exterior soffits, covered walkways, porch and lanai ceilings, and drive-under garages. It has tapered edges for easy finishing.

Thickness	Framing Spacing	Orientation	Screw Spacing
5/8" (15.9 mm)	24" (610 mm) o.c. max	Perpendicular	8" (203 mm) o.c. along framing

Painted Ceilings and Soffits
Finished Joints

A. ToughRock Soffit Board
B. Fiberglass Mesh Tape
C. Drip Edge
D. Setting Compound*
E. Finish Coats

** Sandable setting compounds are not recommended.*

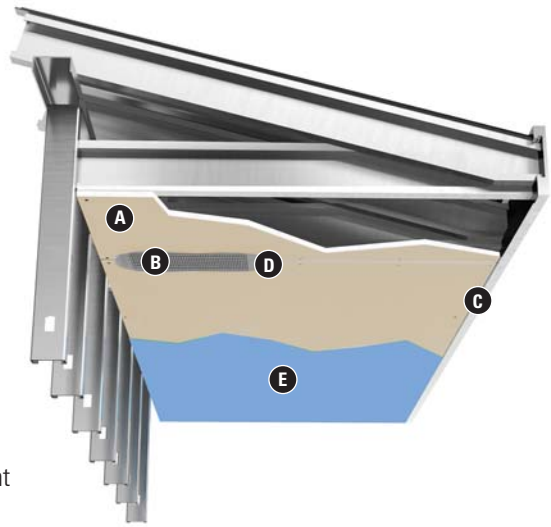

Finishing Method #1

Embed fiberglass mesh tape in setting type joint compound over all joints and fastener heads. Prime with high quality, high build, exterior-grade primer and finish with two coats of high quality exterior-grade paint.

Soffit Limitations for Use

- Product should not be used as a nailing base to support heavy objects.
- It is not recommended for locations that are directly exposed to water. Suitable fascia, moulding and trim must be properly installed. At the jobsite, tarp or cover with plastic sheeting and be certain the roof is water-tight before installation begins.
- Install control joints when any of the following conditions exist:
  a. The soffit or ceiling traverses an expansion, seismic or control element in the base building structure
  b. The expanse of the ceiling or soffit exceeds 30' (9144 mm) in one or both directions.
  c. A control joint is incorporated as an architectural feature.
- Install ventilation devices according to local building code requirements.
- Suspended exterior soffit or ceiling systems must be rigidized, braced and/or attached to solid hanger rod to resist wind uplift. Refer to ASTM C754 "Standard Specification for Installation of Steel Framing Members to Receive Screw-Attached Gypsum Panel Products."

ToughRock® Exterior Gypsum Board Physical Properties

Properties		ASTM Test Method	1/2" (12.7 mm) ToughRock® Sheathing	5/8" (15.9 mm) ToughRock® Fireguard X® Sheathing	5/8" (15.9 mm) ToughRock® Fireguard C® Soffit Board
Thickness[2], nominal inches (mm) ± 1/64" (0.4 mm)		C473 B	1/2 (12.7) ± 1/32 (0.8)	5/8 (15.9) ± 1/32 (0.8)	5/8 (15.9) ± 1/64 (0.4)
Width[2], nominal inches (mm) - 3/32" (2.4 mm)			48 (1219)	48 (1219)	48 (1219)
Length, standard feet (mm) ± 1/4" (6.4 mm)			8 (2438) to 16 (4876)	8 (2438) to 14 (4267)	8 (2438 mm) to 12 (3658 mm)
Edges[2]			Square	Square	Tapered
Surfacing			Moisture-resistant, recycled paper face, back and long edges	Moisture-resistant, recycled paper face, back and long edges	Moisture-resistant, recycled paper face, back and long edges
Packaging			Two pieces per bundle, face-to-face and end taped	Two pieces per bundle, face-to-face and end taped	Two pieces per bundle, face-to-face and end taped
Flexural Strength,[2] min.	Parallel, lbf. (N)	C473 B	≥ 36 (160)	≥ 46 (205)	≥ 46 (205)
	Perpendicular, lbf. (N)	C473 B	≥ 107 (476)	≥ 147 (654)	≥ 147 (654)
R Value[1], ft^2•°F•hr/BTU (m^2•K/W)		C177 at 75°F	0.45 (0.079)	0.48 est. (0.085)	0.56 est. (0.10)
Nail pull resistance,[2] Min., lbf. (N)		C473 B	≥77 (343)	≥87 (387)	≥87 (387)
Hardness,[2] lbf. (N) (core edge and end)		C473 B	≥15 (67)	≥15 (67)	≥15 (67)
Humidified Deflection[2], in (mm)		C473 B	10/8 (32)	5/8 (16)	4/8 (12.7)
Permeance, perms[1] (ng/Pa•s•m[1])		E96	27 (1600)	25 (1400)	
Surface Burning Characteristics[3] (per ASTM E84)	Flame Spread	E84	15	15	15
	Smoke Developed	E84	0	0	0
Water Absorption[1], % maximum		C473	10.0	10.0	N/A

[1] Per Gypsum Association document GA-235.
[2] Specified minimum values are as defined in ASTM C1396.
[3] Products qualify for NFPA Class A or IBC Class 1.

ToughRock® Shaftliner – Area Separation Wall

As land costs and construction costs increase, more builders are constructing multi-family housing. Any time families share walls, there is a concern about safety and comfort. A fire started by a careless tenant can destroy the accumulations of a lifetime. The irritating noise of a neighbor can affect quality of life.

To meet these concerns, ToughRock® Shaftliner Area Separation Walls provide efficient and affordable fire and sound protection. These "fire walls" are continuous from the foundation to the underside of the roof or to form a parapet. These "fire walls" allow for one wall to collapse while still protecting the unit next door.

Components

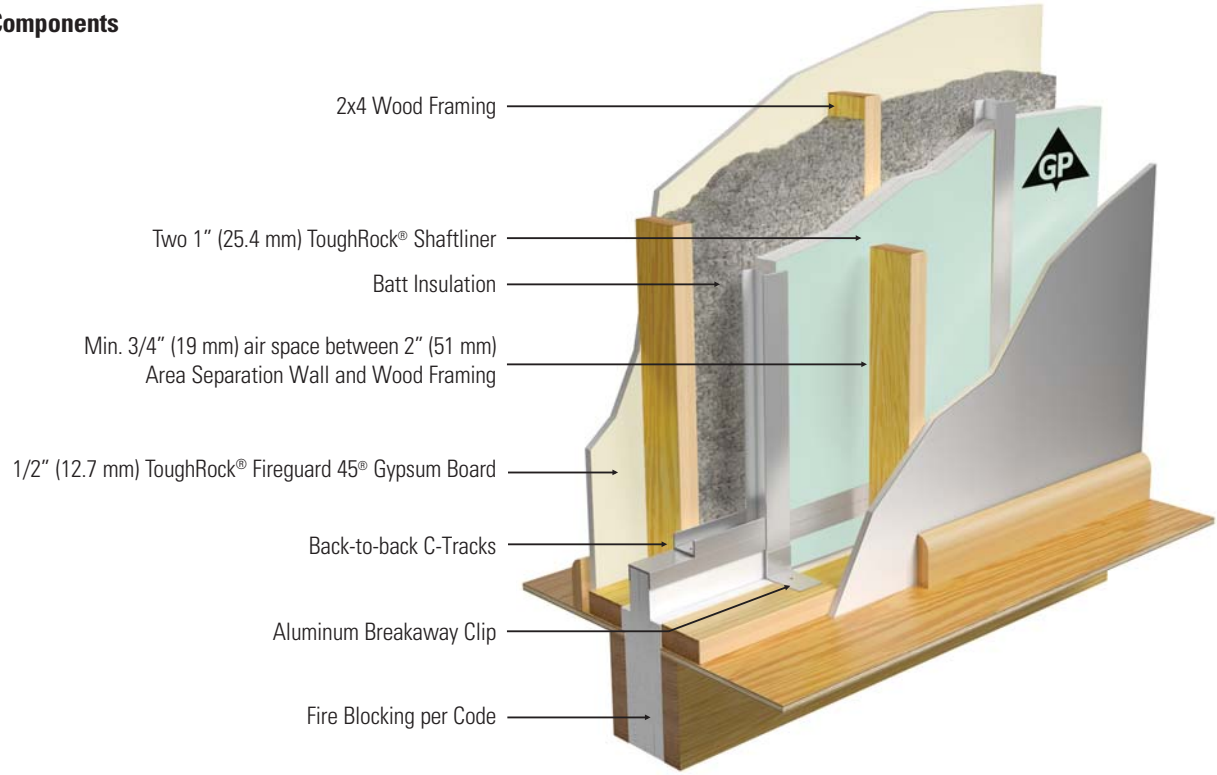

The Area Separation Wall is constructed using 1" (25.4 mm) thick, 24" (610 mm) wide ToughRock Shaftliner boards, 25-gauge (18 mils) steel H-studs, 25-gauge (18 mils) steel C-track and 2" (51 mm) aluminum breakaway clips.

Fire Testing and Building Code Compliance

This Area Separation Wall has been fire tested to ASTM E119. The 2-hour fire-rated Area Separation Wall assembly, using ToughRock Shaftliner boards, is classified by UL and ITS/WHI and meets the requirements of the International Building Code (IBC) Section 706, "Fire Walls." This Area Separation Wall assembly using ToughRock Shaftliner boards is located in the UL Fire Resistance Directory under UL Design U375 and the WHI Fire Resistance Directory under WHI GP/WA 120-04. Consult the applicable fire resistance directory for additional information.

Installation of 2" (51 mm) Area Separation Wall

1. Position 2" (51 mm) C-Track a minimum 3/4" (19 mm) from the framed wall of the adjacent unit. Fasten C-Track to foundation with fasteners spaced a maximum of 24" (610 mm) o.c. When specified, apply a minimum 1/4" (6 mm) bead of acoustical sealant under the C-Track to maximize acoustical privacy. Run the C-Track to the end of the foundation. In case of offset units, see 15 under Special Conditions.
2. Start the wall with a vertical C-Track at one end. Install two 1" (25.4 mm) shaftliner panels vertically with either side facing out* into the C-Track at one end of the area separation wall. Install the H-stud over the double beveled edges of the shaftliner panels and continue alternately until the wall has reached the opposite end of the foundation. Terminate the wall using a C-Track. The vertical C-Tracks at each end of the wall should be attached in the corners to the horizontal sections of the C-Track using a minimum of one 3/8" (9 mm) minimum length pan head screw.

   ** Note: Some authorities may require labeling to be visible.*
3. Cap the first section of the Area Separation Wall with a C-Track and attach to the vertical C-Track in the corners using a minimum of one 3/8" (9 mm) minimum length pan head screw.
4. Breakaway clips span the minimum 3/4" (19 mm) air space and provide a fusible link between the H-studs and the adjacent wall framing. Attach the breakaway clips to the flange of the H-stud using a minimum of one 3/8" (9 mm) minimum length pan head screw and to the adjacent wood framing using a minimum of one 1" (25.4 mm) minimum length drywall screw.

   * When UL Design U375 Area Separation Wall assembly is specified, the breakaway clips should be located vertically at each floor level 10'0" (3,048 mm) o.c. and horizontally on every H-stud 24" (610 mm) o.c. When the total height of the Area Separation Wall exceeds 23' (7,010 mm), breakaway clips shall be installed every 5'0" (1,524 mm) for the lower 20' (6,096 mm) and every 10'0" (3,048 mm) for the upper 24'0" (7,315 mm) of the wall assembly. When the total height of the Area Separation Wall exceeds 44' (13,411 mm) up to 66' (20,117 mm), breakaway clips shall be installed every 40" (1,016 mm) for the lower 22' (6,706 mm), every 5' (1,524 mm) for the next 20' (6,096 mm), and every 10'0" (3,048 mm) for the upper 24' (7,315 mm). Breakaway clips are installed on both sides of the Area Separation Wall.

   * When ITS/WHI Design WHI GP/WA 120-04 Area Separation Wall assembly is specified, the breakaway clips should be located vertically at each floor level 10'0" (3048 mm) o.c. and horizontally on every other H-stud or 48" (1,219 mm) o.c. When the total height of the Area Separation Wall exceeds 20'0" (6,096 mm), breakaway clips shall be installed vertically every 8'0" (2,438 mm) maximum for the lower 20'0" (6,096 mm) and every 10'0" (3,048 mm) maximum for the upper 48'0" (14,630 mm) of the wall assembly.
5. Fireblocking is installed on both sides of the Area Separation Wall at each floor level as defined in the IBC.
6. To continue the wall, install a C-Track over the C-Track used to cap the lower section, placed back to back and attached together with two 3/8" (9 mm) pan head screws at ends and spaced 24" (610 mm) o.c. Stagger back-to-back C-Track joints a minimum of 12" (305 mm).
7. At the top of the wall, the 2" (51 mm) area separation wall may terminate at the roof intersection or at the top of the parapet. Follow local code and design professional requirements.
8. Once the 2" (51 mm) Area Separation Wall is erected, construction of the adjacent interior wall framing can begin. Breakaway clip and fire-blocking installation is identical for both sides of the 2" (51 mm) Area Separation Wall.
9. Do not install insulation in the system until the building has been properly closed in.

Special Conditions

1. When an H-Stud does not align with the adjacent wood framing, insert blocking between wood framing members and attach breakaway clip to blocking using one 1-1/4" (32 mm) drywall screw and to the H-Stud using a minimum of one 3/8" (9 mm) minimum length pan head screw.
2. If gaps are present between back-to-back C-Tracks, caulk using appropriate fire caulking material.
3. When wall framing is spaced greater than 1" (25.4 mm) away from the solid 2" (51 mm) Area Separation Wall, aluminum clips with longer legs are permitted. Contact clip manufacturers for modified clips. Additional wood blocking can be added between the wood studs to provide clip support. Space wood blocking minimum 3/4" (19 mm) away from Area Separation Wall.
4. The support walls located adjacent to, and on each side of the solid 2" (51 mm) Area Separation Wall protect and maintain the required 3/4" (19 mm) air space, offer increased acoustical privacy and provide necessary aesthetics. These walls can be designed as load bearing and readily accommodate electrical and plumbing systems. These systems should not impede the required 3/4" (19 mm) air space. Apply acoustical sealant around penetrations for maximum acoustical privacy.
5. The required 3/4" (19 mm) air space can be eliminated if the metal framing is covered on both faces with 6" (152 mm) wide, 1/2" (12.7 mm) DensArmor Plus® Fireguard C® or 1/2" (12.7 mm) ToughRock® Fireguard C® or 5/8" (15.9 mm) ToughRock® Fireguard X® or 5/8" (15.9 mm) DensArmor Plus® Fireguard® Interior Panel strips. The gypsum board strips are attached with 1" (25.4 mm) drywall screws spaced 12" (305 mm) o.c. to the metal framing. This primarily occurs in accessible attic areas. Attic areas not accessible do not require the 6" (152 mm) wide gypsum board strips.

Aluminum Angle Clip

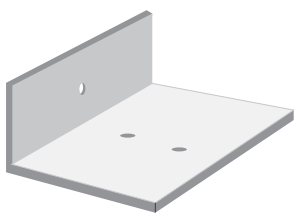

C-Track, Cap, Edge or End Closure

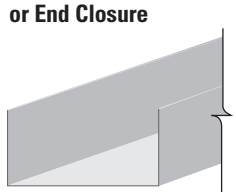

H-Stud, 25-Gauge (18 mils)

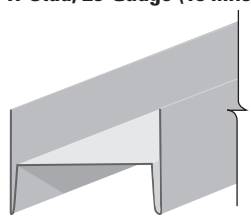

Fire-Rated Assemblies

ToughRock® Shaftliner is UL classified as **Type TP-6** and included in numerous designs listed by UL for hourly fire resistance ratings.

In addition, ToughRock Shaftliner is classified as "Type X" in accordance with ASTM C1396. "Type X" as used in this technical guide designates gypsum board manufactured and tested in accordance with specific ASTM standards for increased fire resistance beyond regular gypsum board.

The following design assemblies are for illustrative purposes only. Consult the fire resistance directory or test report for complete assembly information. For additional fire safety information concerning ToughRock Shaftliner, visit www.buildgp.com/safetyinfo.

System Assemblies – 2-Hour Ratings – Area Separation Walls

2-Hour Fire Rating

Design Reference: UL U375, WHI GP/WA 120-03, cUL U375

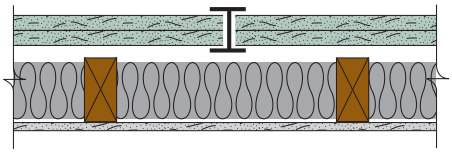

59 STC Sound Trans.

Test Reference: RAL TL 10-290

Two layers 1" (25.4 mm) ToughRock® Shaftliner inserted in H-Studs 24" (610 mm) o.c. Min. 3/4" (19 mm) air space between liner boards and adjacent wood or metal framing.

Sound Tested with 2" (51 mm) x 4" (102 mm) stud wall with 1/2" (12.7 mm) ToughRock® Fireguard 45®and 3-1/2" (89 mm) fiberglass insulation in stud space.

2-Hour Fire Rating

Design Reference: UL U375, WHI GP/WA 120-04, cUL U375

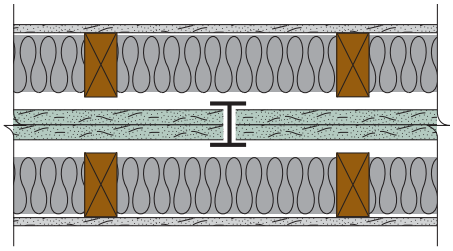

66 STC Sound Trans.

Test Reference: RAL TL 10-291

Two layers 1" (25.4 mm) ToughRock® Shaftliner inserted in H-Studs 24" (610 mm) o.c. Min. 3/4" (19 mm) air space on both sides must be maintained between liner boards and adjacent framing.

Sound Tested with 2" (51 mm) x 4" (102 mm) stud wall with 1/2" (12.7 mm) ToughRock® Fireguard 45® Gypsum Board each side of assembly and 3-1/2" (89 mm) fiberglass insulation in stud space both sides.

2-Hour Fire Rating

Design Reference: WHI 495-0743

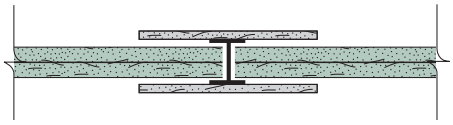

38 STC Sound Trans. Est.

Part. Thickness: 3" (76 mm)

Weight per Sq. Ft.: 9.5 (46 Kg/m^2)

Two layers 1" (25.4 mm) ToughRock® Shaftliner inserted in H-Studs 24" (610 mm) o.c. Metal covered using 6" (152 mm) wide 1/2" (12.7 mm) DensArmor Plus Fireguard C® interior boards or 1/2" (12.7 mm) ToughRock Fireguard C® Gypsum Board.

System Assemblies – 2-Hour Ratings – Area Separation Walls

2-Hour Fire Rating

Design Reference: GET 4/13/70, GA WP 7125

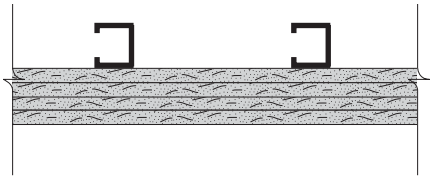

35-39 STC Sound Trans.
Test Reference: KG 634
Approx. Weight: 9.5 psf (46 Kg/m^2)

Base layer 5/8" (15.9 mm) ToughRock® Fireguard® X Gypsum Board applied horizontally to one side only of 1 5/8" (41 mm) 18 mil (25 ga.), steel studs 24" (610 mm) o.c. with 1" (25.4 mm) Type S drywall screws 12" (305 mm) o.c. **Second** layer 5/8" (15.9 mm) ToughRock® Fireguard® X Gypsum Board applied horizontally with two 1 5/8" (41 mm) Type S drywall screws per board. **Third** layer 5/8" (15.9 mm) ToughRock® Fireguard® X Gypsum Board applied at right angles with two 2-5/8" (67 mm) Type S drywall screws per board and one 2-5/8" (67 mm) Type S drywall screws placed midway between studs at floor and ceiling runners. Steel strips 0.020" x 1-1/2" wide vertically applied over third layer at vertical joints and intermediate studs with 2-5/8" (67 mm) Type S drywall screws 12" (305 mm) o.c. **Fourth** layer 5/8" (15.9 mm) ToughRock® Fireguard® X Gypsum Board applied at right angles to steel strips with 1" (25.4 mm) Type S drywall screws 8" (203 mm) o.c.

Joints offset 24" (610 mm) between layers. **(NLB)**

3-Hour Fire Rating

Design Reference: WHI Design GP/WA 180-02

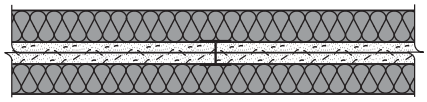

Approx. psf (49 Kg/m^2)

Two layers 1" (25.4 mm) x 24" (610 mm) ToughRock® Shaftliner inserted between 2" (51 mm) floor and ceiling runners with 2" (51 mm) steel H or I studs between adjacent pairs of gypsum panels. 2" (51 mm) mineral fiber insulation, 3.0 pcf, applied over each side and stapled to gypsum panels. **(NLB)**

Details

The following assemblies and details are for illustration purposes only. Please consult design authority and confirm code compliance. Georgia-Pacific Gypsum does not provide design services.

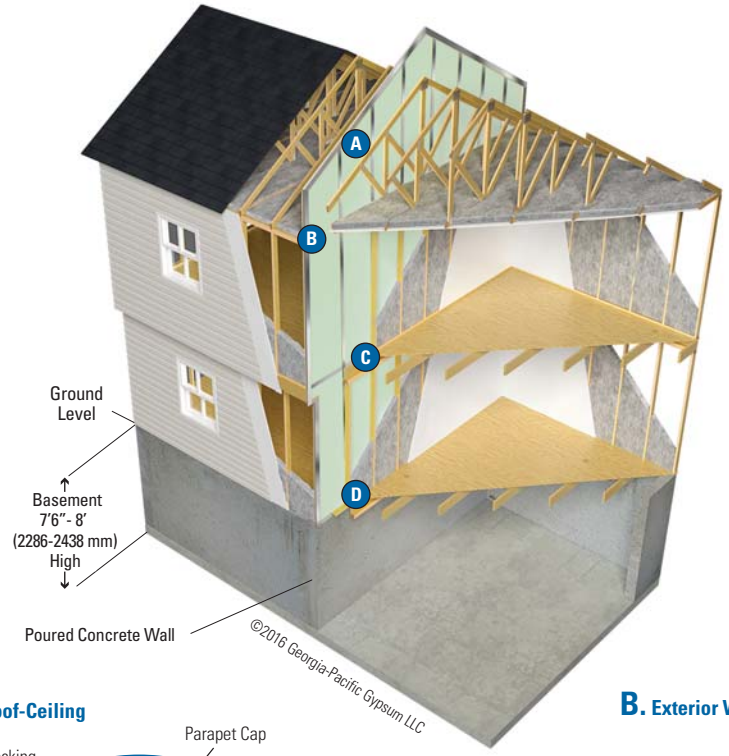

A. Roof-Ceiling

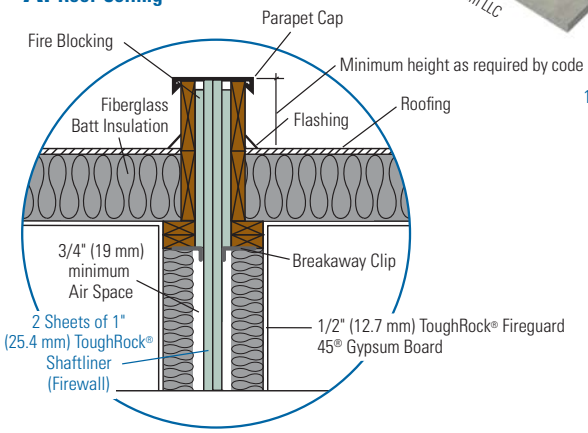

B. Exterior Wall Intersection

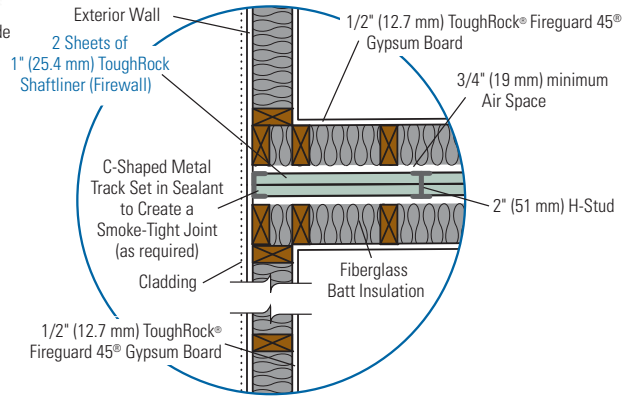

C. Floor Intersection

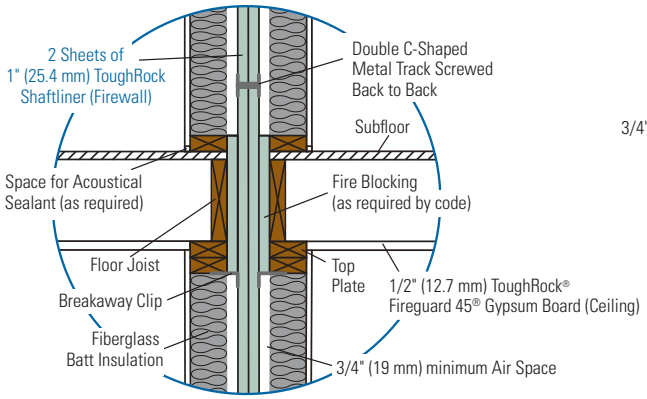

D. Wall-to-Slab

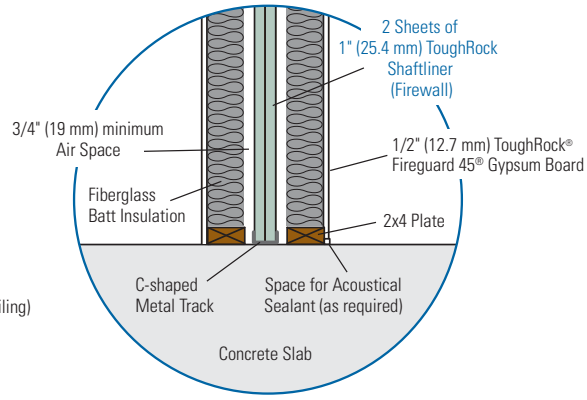

CAUTION: For product fire, safety and use information, go to buildgp.com/safetyinfo.

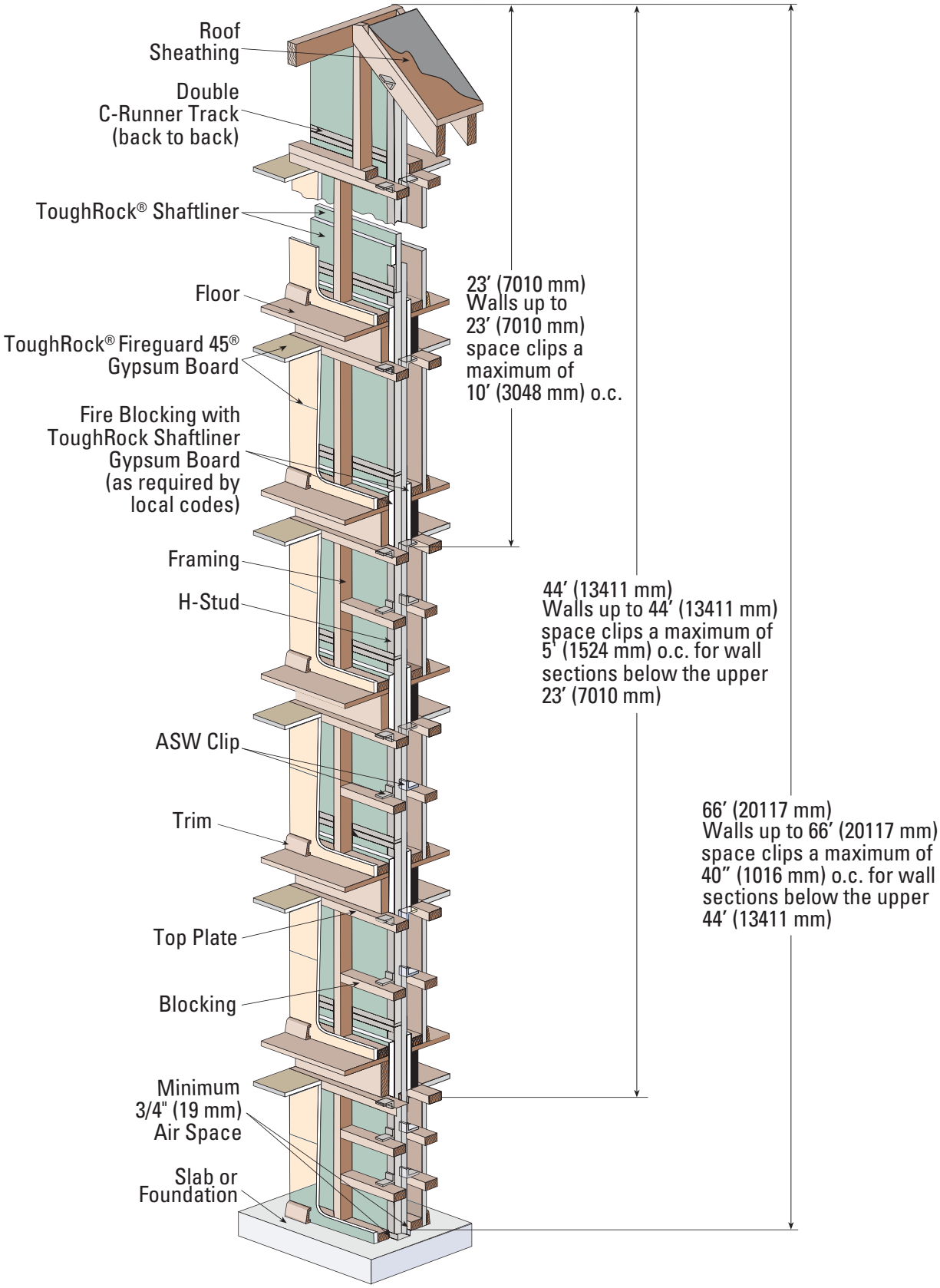
Roof Sheathing
Double C-Runner Track (back to back)
ToughRock® Shaftliner
Floor
ToughRock® Fireguard 45® Gypsum Board
Fire Blocking with ToughRock Shaftliner Gypsum Board (as required by local codes)
Framing
H-Stud
ASW Clip
Trim
Top Plate
Blocking
Minimum 3/4" (19 mm) Air Space
Slab or Foundation
23' (7010 mm) Walls up to 23' (7010 mm) space clips a maximum of 10' (3048 mm) o.c.
44' (13411 mm) Walls up to 44' (13411 mm) space clips a maximum of 5' (1524 mm) o.c. for wall sections below the upper 23' (7010 mm)
66' (20117 mm) Walls up to 66' (20117 mm) space clips a maximum of 40" (1016 mm) o.c. for wall sections below the upper 44' (13411 mm)

Protruding Exterior Wall

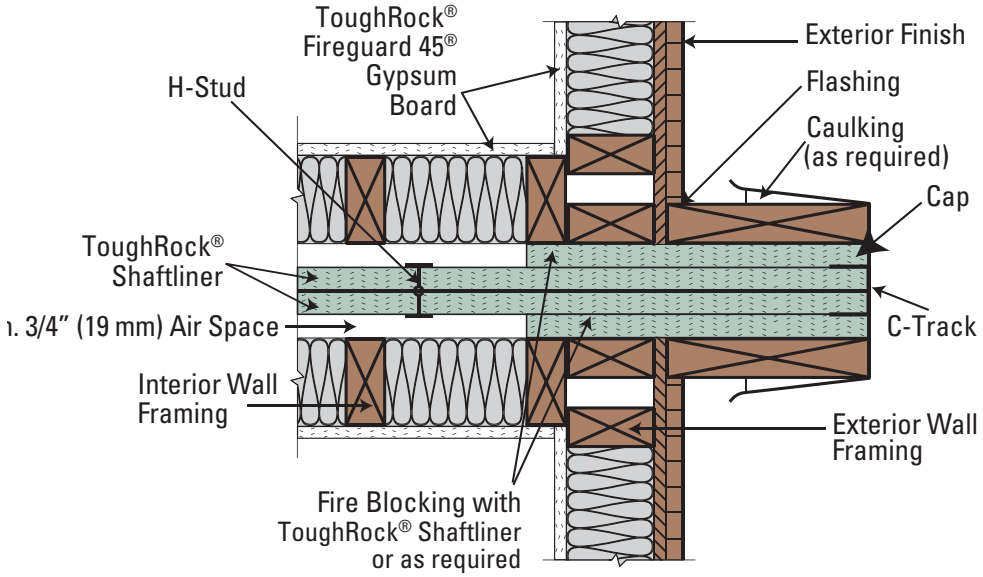

Roof Intersection with Parallel Roof Trusses

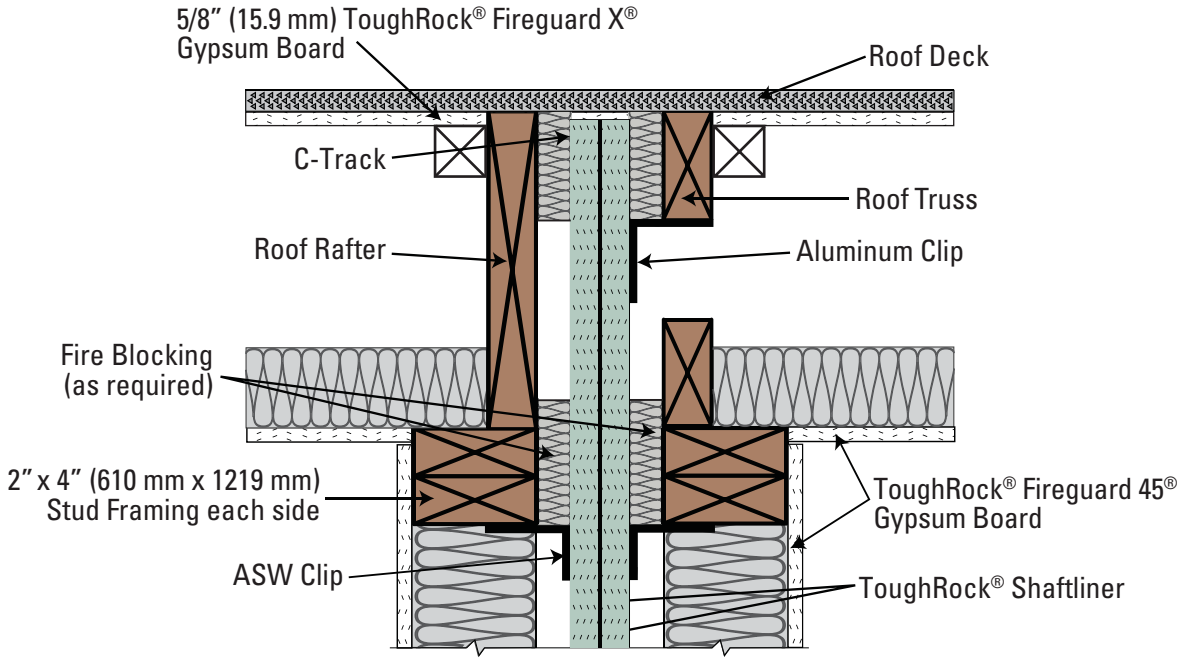

CAUTION: For product fire, safety and use information, go to buildgp.com/safetyinfo.

Typical Roof Junction Detail

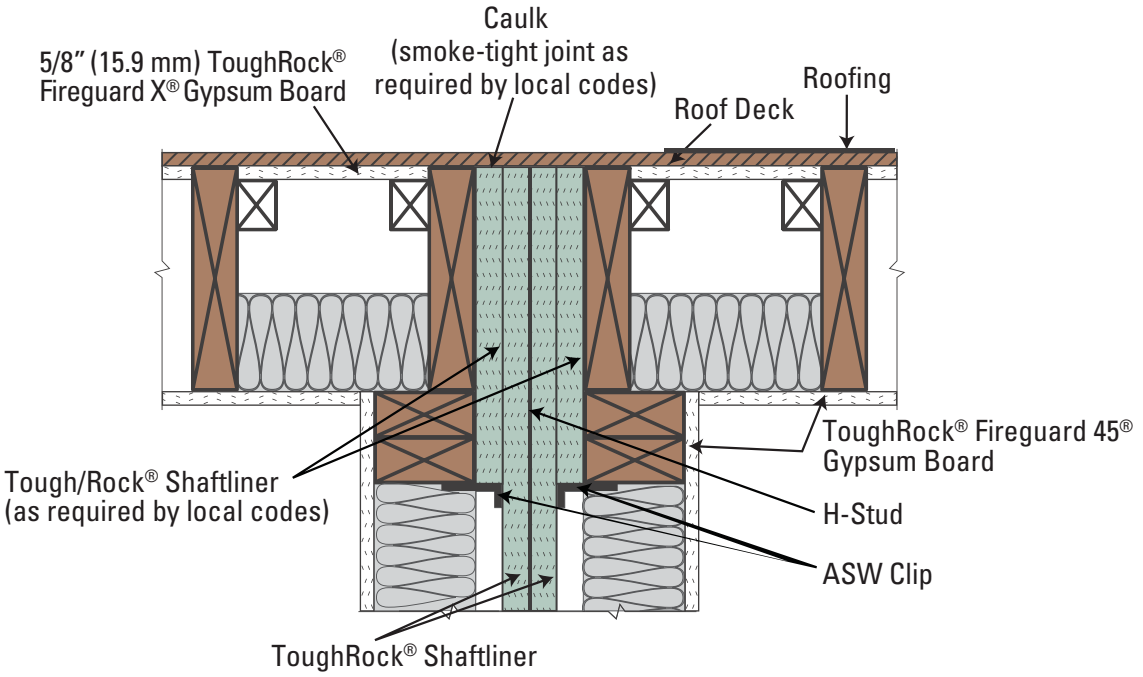

Shaftwall/ Stairwell Systems

ToughRock® Shaftliner is used as a component in a system used to enclose elevator shafts, construct fire rate stairwells, duct protection, air return systems, and horizontal membranes.

Unlike heavy and expensive masonry construction in the building core, stairwell/shaftwall enclosures are lighter weight, maintenance-free, and go up quickly without construction delay during cold weather.

Easy Installation

Because the shaftwall assemblies are built from one side only, there's no need to access the inside of the shaft. The strong, C-T, C-H or I steel members go up quickly. Most configurations require only two steel components and two types of gypsum board. That makes the systems ideal for furred chases and interior partitions where access is restricted. Engineered for durability, the systems withstand air-pressure surges of high-speed elevators as well as lateral impact of stairway doors.

Built-In Economy

Gypsum shaftwall/stairwell systems typically cost less than masonry. Cost savings can be even greater when masonry requires a finish. Contractors also save money, since the shaftwall/stairwell enclosures do not require expensive structural framing or concrete construction.

Reliable Steel Components

The two primary framing components in the ToughRock® Shaftliner shaftwall/stairwell system are slotted C-T, C-H or I studs and J track, manufactured from galvanized steel that meets the requirements of ASTM C645 and A 924.

The 2-1/2" (64 mm) steel framing system retains the popular 3-1/2" (89 mm) wall thickness with a two-hour fire rating (see page 28) to accommodate standard door framing dimensions. The steel stud offers a unique feature — slotting in the web of the stud. Tests have demonstrated that these slots effectively improve resistance to thermal and noise transmissions.

The 2-1/2" (64 mm) stud provides a 1-1/2" (38 mm) air cavity for services. Studs are friction-fitted between top and bottom J track. Use J track for all closure details, including duct and door openings, abutments, intersections, etc. No other special metal components are required.

Studs are automatically spaced 24" (610 mm) o.c. maximum with our special shaftliner boards.

The data relating to fire and sound tested assemblies is based on the characteristics, properties and performance of materials and systems obtained under controlled test conditions as set forth under the appropriate ASTM standard, such as E119 (fire), E90 (sound) or E72 (structural).

See individual fire test listings for approved studs. (Drawings are not to scale.)

C-T Stud Detail

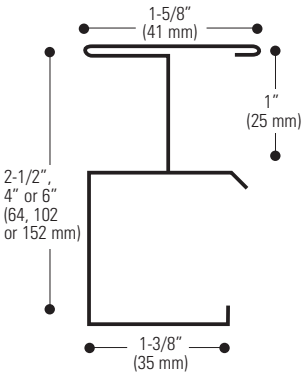

C-H Stud Detail

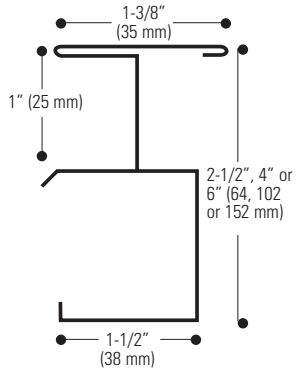

I Stud Detail

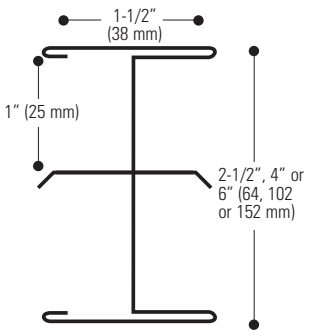

J track

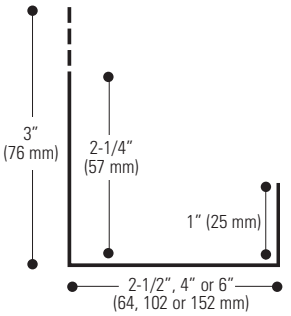

Shaftliner/Stairwell Installation Instructions

1. Lay out per construction drawings. Secure J track as perimeter framing on floor and plumb to ceiling and sides. Attach with fasteners no more than 24" (610 mm) o.c.
2. Install the ToughRock® Shaftliner, cut 3/4" (19 mm) (or as required by fire test reference) less than the total height of the framed section. Plumb the board flush against the web of the J track and secure with 1-5/8" (41 mm) Type S screws 24" (610 mm) o.c. or bend out tabs in J track to secure panels in place.
3. Insert stud, cut to the same length as the shaftliner, into the top and bottom J track and fit snuggly over the previously installed ToughRock® Shaftliner.
4. Install next ToughRock® Shaftliner inside the J track and within the tabs of the stud. Note the edges of the panel are beveled to help guide the panel into the slotted and tabbed section of the stud.
5. Progressively install succeeding studs and boards as described above until the wall section is enclosed. The final piece of shaftliner may be secured with 1-5/8" (41 mm) Type S screws or tabs from the J track at 24" (610 mm) o.c.
6. For doors, ducts, or other large penetrations or openings, install J track as perimeter framing. See details on accompanying pages.
7. For attachment of 1/2" (12.7 mm) ToughRock® Fireguard C® Gypsum Board, 5/8" (15.9 mm) ToughRock® Fireguard X® Gypsum Board, or 5/8" (15.9 mm) ToughRock® Fireguard C® Gypsum Board, see the specified fire test reference for list of boards approved for the test reference and board orientation, and fastener spacing requirements.

Fire-Rated Assemblies

1-Hour Fire Rating

Design Reference: UL V493, cUL V493,
GA WP 7024.3

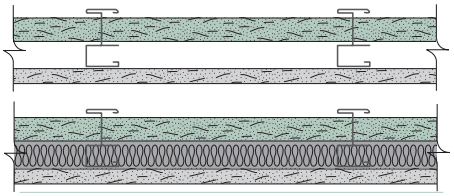

40-44 STC Sound Trans.

Test Reference: RAL TL 09-357
Approx. Weight: 8.5 psf (42 Kg/m^2)

One layer 1" (25.4 mm) x 24" (610 mm) ToughRock® Shaftliner inserted between 2-1/2" (64 mm) floor and ceiling runners with tab-flange section of 2-1/2" (64 mm) steel C-H, C-T, or I studs between panels.

OPPOSITE SIDE: One layer 5/8" (15.9 mm) ToughRock® Fireguard® X Gypsum Board applied vertically or horizontally to studs with 1" (25.4 mm) Type S drywall screws 12" (305 mm) o.c. when applied vertically, or 8" (203 mm) o.c. when applied horizontally.

Sound tested with 2-1/2" (64 mm) steel stud wall with 1-1/2" (38 mm) fiberglass insulation in stud space.

C-T, C-H or I Stud	2-1/2" (64 mm)	4" (102 mm)	6" (152 mm)
Wall Thickness	3-1/8" (80 mm)	4-5/8" (118 mm)	6-5/8" (168 mm)

2-Hour Fire Rating

Design Reference: UL V493, cUL V493
GA WP 7065.5

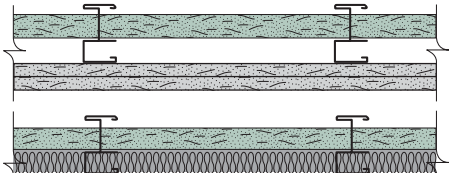

50-54 STC Sound Trans.

Test Reference: RAL TL 09-358
Approx. Weight: 8.5 psf (42 Kg/m^2)

One layer 1" (25.4 mm) x 24" (610 mm) ToughRock® Shaftliner inserted between 2-1/2" (64 mm) floor and ceiling runners with tab-flange section of 2-1/2" (64 mm) steel C-H, C-T, or I studs between panels.

OPPOSITE SIDE: **Base** layer 5/8" (15.9 mm) ToughRock® Fireguard® X Gypsum Board applied horizontally to studs with 1" (25.4 mm) Type S drywall screws 24" (610 mm) o.c. **Face** layer 5/8" ToughRock® Fireguard® X Gypsum Board applied vertically to studs with 1-5/8" (41 mm) Type S drywall screws 12" (305 mm) o.c. **(NLB)**

Sound tested with 2-1/2" (64 mm) steel stud wall with 1-1/2" (38 mm) fiberglass insulation in stud space.

C-T or C-H Stud	2-1/2" (64 mm)	4" (102 mm)	6" (152 mm)
Wall Thickness	3-3/4" (95 mm)	5-1/4" (133 mm)	7-1/4" (184 mm)

Fire-Rated Assemblies

2-Hour Fire Rating

Design Reference: UL V493, cUL V493

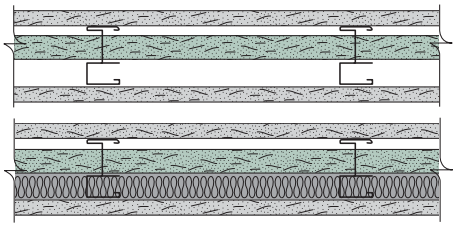

45-49 STC Sound Trans.

Test Reference: RAL TL 09-359
Approx. Weight: 8.5 psf (42 Kg/m2)

One layer 1" (25.4 mm) x 24" (610 mm) ToughRock® Shaftliner inserted between 2-1/2" (64 mm) floor and ceiling runners with tab-flange section of 2-1/2" (64 mm) steel C-H, C-T, or I studs between panels.

One layer 5/8" (15.9 mm) ToughRock® Fireguard® X gypsum board applied vertically to each side with 1" (25.4 mm) Type S drywall screws 12" (305 mm) o.c.

Sound tested with 1-1/2" (38 mm) glass fiber insulation friction fit in stud space. **(NLB)**

C-T or C-H Stud	2-1/2" (64 mm)	4" (102 mm)	6" (152 mm)
Wall Thickness	3-3/4" (95 mm)	5-1/4" (133 mm)	7-1/4" (184 mm)

2-Hour Fire Rating

Design Reference:
WHI Design GP/WA 120-01

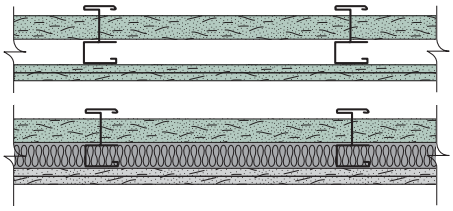

50-54 STC Sound Trans.

Test Reference: RAL TL 09-360
Approx. Weight: 8.5 psf (42 Kg/m2)

One layer 1" (25.4 mm) x 24" (610 mm) ToughRock® Shaftliner inserted between 2-1/2" (64 mm) floor and ceiling runners with tab-flange section of 2-1/2" (64 mm) steel C-H, C-T, or I studs between panels.

OPPOSITE SIDE: **Base** layer 1/2" (12.7 mm) ToughRock® Fireguard C® Gypsum Board applied horizontally to studs with 1" (25.4 mm) Type S drywall screws 24" (610 mm) o.c. starting 6" (152 mm) from the top and bottom. **Face** layer 1/2" (12.7 mm) ToughRock® Fireguard C® Gypsum Board applied vertically to studs with 1-5/8" (41 mm) Type S drywall screws 12" (305 mm) o.c. starting 3" (76 mm) from the top and bottom. Joints offset 24" (610 mm) from base layer joints.

Sound tested with 1-1/2" (38 mm) glass fiber insulation friction fit in stud space. **(NLB)**

C-T, C-H or I Stud	2-1/2" (64 mm)	4" (102 mm)	6" (152 mm)
Wall Thickness	3-1/2" (89 mm)	5" (127 mm)	7" (178 mm)

2-Hour Fire Rating

Design Reference:
WHI Design GP/WA 120-02

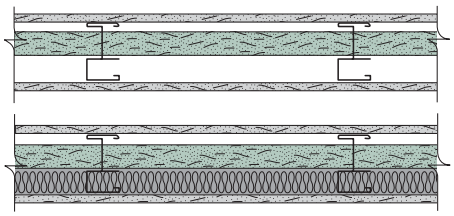

45-49 STC Sound Trans.

Test Reference: RAL TL 09-359
Approx. Weight: 8.5 psf (42 Kg/m^2)

One layer 1" (25.4 mm) x 24" (610 mm) ToughRock® Shaftliner inserted between 2-1/2" (64 mm) floor and ceiling runners with tab-flange section of 2-1/2" (64 mm) steel C-H, C-T, or I studs between panels.

One layer 1/2" (12.7 mm) ToughRock® Fireguard C® Gypsum Board applied vertically to each side with 1" (25.4 mm) Type S drywall screws 12" (305 mm) o.c. starting 6" (152 mm) from the top and bottom. Joints staggered 24" (610 mm) on opposite sides.

Sound tested with 1-1/2" (38 mm) glass fiber insulation friction fit in stud space. **(NLB)**

C-T, C-H or I Stud	2-1/2" (64 mm)	4" (102 mm)	6" (152 mm)
Wall Thickness	3-1/2" (89 mm)	5" (127 mm)	7" (178 mm)

Fire-Rated Assemblies

3-Hour Fire Rating

Design Reference:
WHI Design GP/WA 180-01

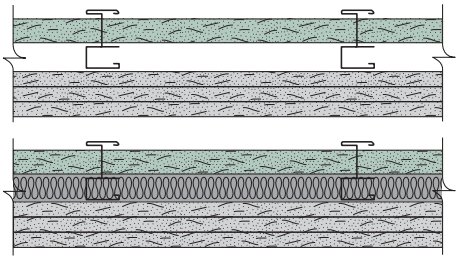

50-54 STC Sound Trans.

Test Reference: RAL TL 09-360
Approx. Weight: 12 psf (59 Kg/m^2)

One layer 1" (25.4 mm) x 24" (610 mm) ToughRock® Shaftliner inserted between 2-1/2" (64 mm) floor and ceiling runners with tab-flange section of 2-1/2" (64 mm) steel C-H, C-T, or I studs between panels.

Base layer 5/8" (15.9 mm) ToughRock® Fireguard® C Gypsum Board applied horizontally to studs with 1" (25.4 mm) Type S drywall screws 24" (610 mm) o.c. **Second** layer 5/8" (15.9 mm) ToughRock® Fireguard® C Gypsum Board applied horizontally to studs with 1-5/8" (41 mm) Type S drywall screws 16" (406 mm) o.c. at studs and 1-1/2" (38 mm) Type G drywall screws 16" (406 mm) o.c. placed 2" (51 mm) from any vertical joints. **Face** layer 5/8" (15.9 mm) ToughRock® Fireguard® C Gypsum Board applied vertically to studs with 2-1/4" (57 mm) Type S drywall screws 12" (305 mm) o.c. at studs and 1-1/2" (38 mm) Type G drywall screws 12" (305 mm) o.c. placed 2" (51 mm) from either side of horizontal joints.

Sound tested with 1-1/2" (38 mm) glass fiber insulation friction fit in stud space. **(NLB)**

C-T, C-H or I Stud	2-1/2" (64 mm)	4" (102 mm)	6" (152 mm)
Wall Thickness	4-3/8" (111 mm)	5-7/8" (149 mm)	7-7/8" (200 mm)

Door Frame Details

There are numerous elevator door frame combinations and special conditions that cannot be detailed beyond general conditions in this catalog. The interface of the shaftwall system and elevator door frame should be addressed in the shop drawings of the elevator and/or frame manufacturer literature.

A. C-T, C-H or I studs 24" (610 mm) o.c.
B. Pan head screws on both sides of door framing
C. J track – 20 (33 mils) or 25 gauge (18 mils), as required
D. Intersection Detail
E. Gypsum board filler strips may be required where jambs are in place prior to walls to allow proper fastening of gypsum board J track
F. 20-gauge (33 mils) J track
G. 20-gauge (33 mils) J track screwed to jamb anchor clips
H. Solid gypsum board filler strips as required for frames
I. 1" (25.4 mm) ToughRock® Shaftliner
J. 1/2" (12.7 mm) ToughRock® Fireguard C® Gypsum Board or 5/8" (15.9 mm) ToughRock® Fireguard X® Gypsum Board
K. Acoustical Sealant
L. Power actuated fasteners 24" (610 mm) o.c.

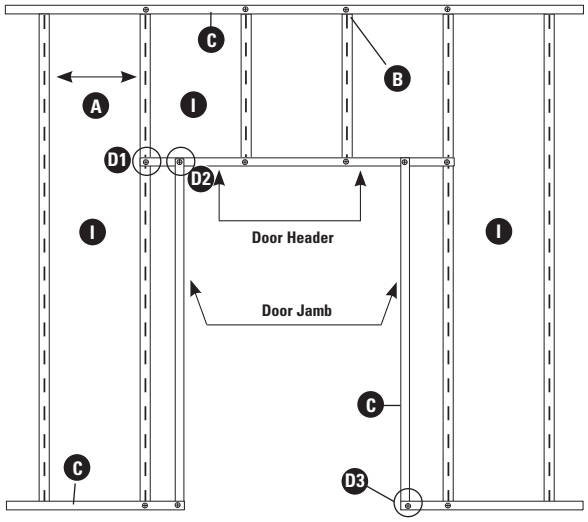

Door Header

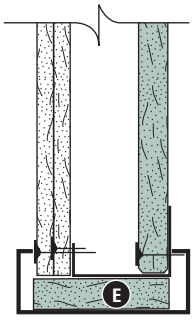

Door Jamb, Typical

Shaftwall

Stairwell

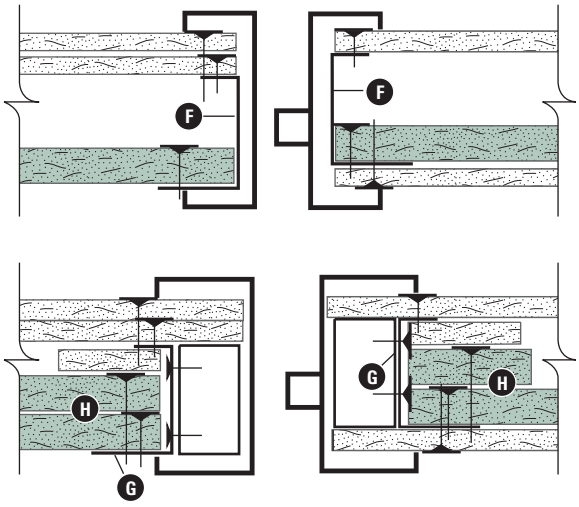

Intersection Details

Detail 1 (D1)

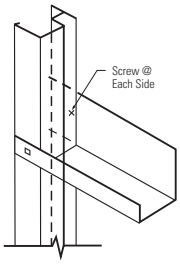

Detail 2 (D2)

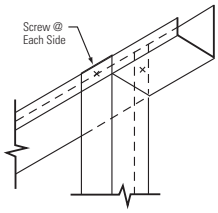

Detail 3 (D3)

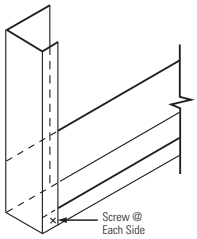

View of Top of Wall

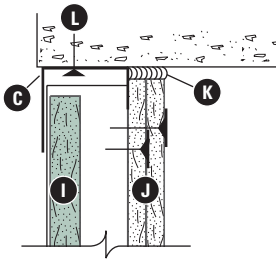

View of Base

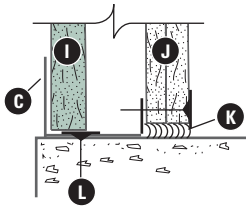

CAUTION: For product fire, safety and use information, go to buildgp.com/safetyinfo.

Wall Frame Details

A. Alternate to bending tabs: use 1-5/8" (41 mm) Type S screws at 24" (610 mm) o.c.
B. Tabs in J track bent out at 24" (610 mm), alternate to using screws
C. J track – 20 (33 mils) or 25 (18 mils) gauge
D. Attached to J track prior to installation.
E. Metal C stud or J track where span is over 24" (610 mm), alternate to using screws
F. Spray-on fireproofing
G. 1/2" (12.7 mm) ToughRock® Fireguard C® Gypsum Board or 5/8" (15.9 mm) ToughRock® Fireguard X® Gypsum Board
H. 1" (25.4 mm) ToughRock® Shaftliner
I. Acoustical Sealant
J. Control joint
K. Corner bead
L. Column

Typical Inside Corner

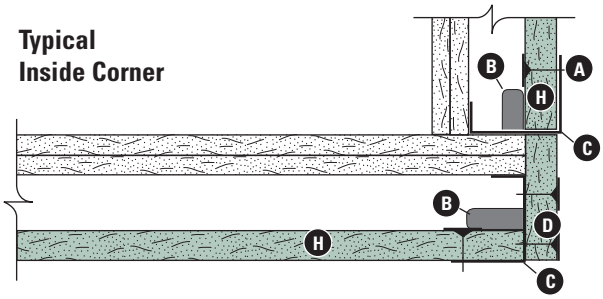

Typical Outside Corner

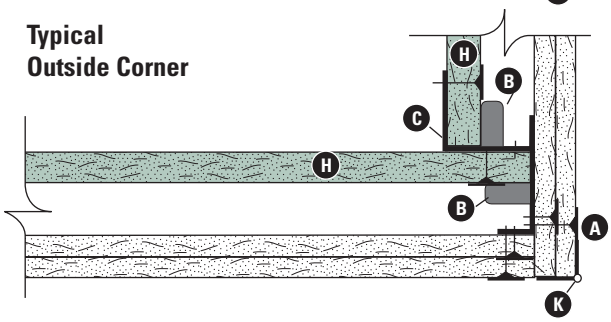

Column Bypass

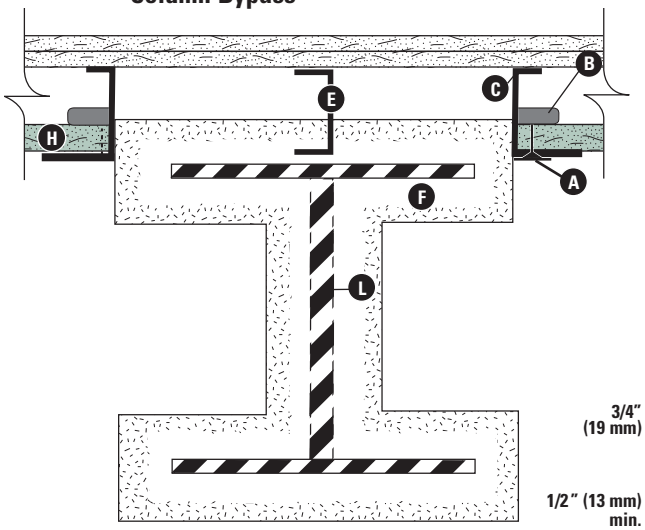

Stairwell Control Joint

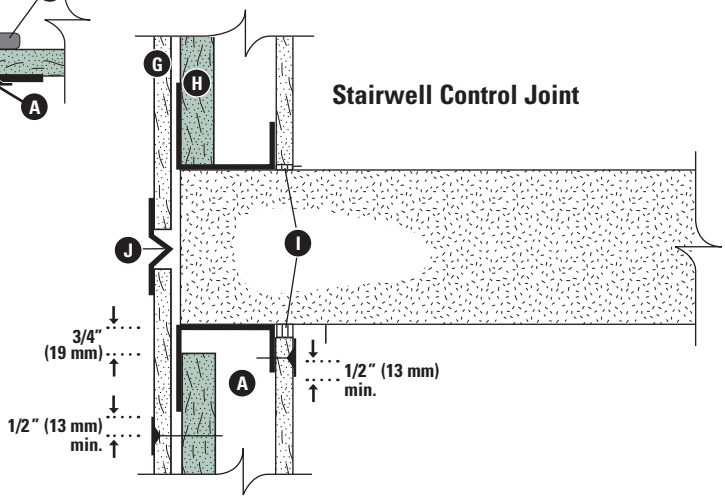

Corner Column Bypass

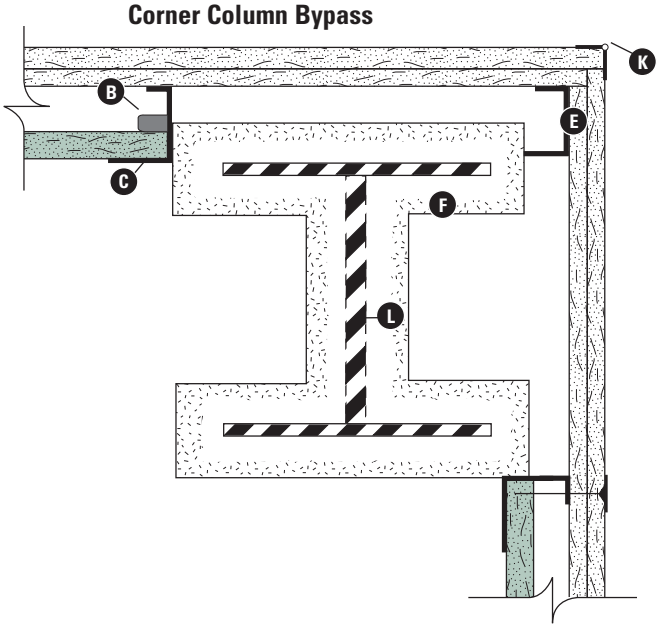

View from End of Wall

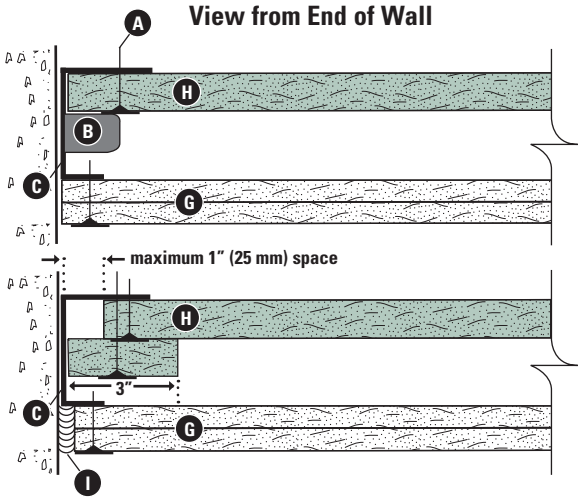

CAUTION: For product fire, safety and use information, go to buildgp.com/safetyinfo.

Rails/Chute/Beam Details

A. 1" (25.4 mm) ToughRock® Shaftliner

B. Additional attachment of 1" (25.4 mm) ToughRock Shaftliner, inside or outside item A

C. 1/2" (12.7 mm) ToughRock® Fireguard C® Gypsum Board or 5/8" (15.9 mm) ToughRock® Fireguard X® Gypsum Board

D. Typical call indicator box

E. Spray-on fireproofing

F. Fasteners 24" (610 mm) o.c.

G. J track

H. Handrail

I. 6" (152 mm) wide 16-gauge (54 mils) steel backing plate screwed to C-T Studs

Call Box/Outlet Box/Mail Chute

4" (102 mm) minimum height behind box and screw attached to tabs or flanges of C-T studs or J track.

Attachment needed either inside or outside shaft cavity. Top layer optional.

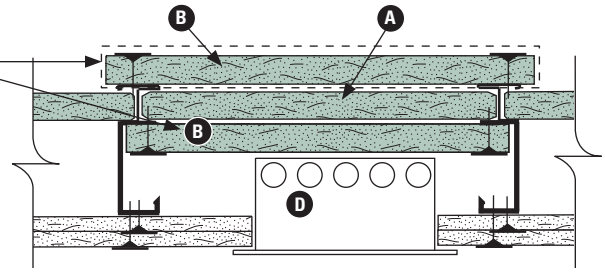

Steel Beam

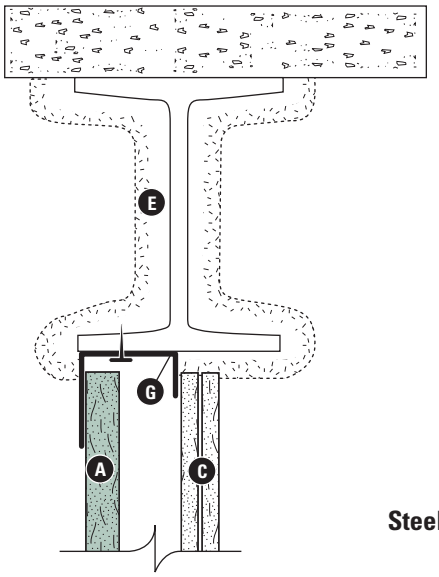

Heavy-Duty Handrail

Backing for attachment of a wide variety of items in commercial and industrial usage, typically uses 16-gauge (54 mils) steel strips attached to the framing. Special loads should be given particular attention.

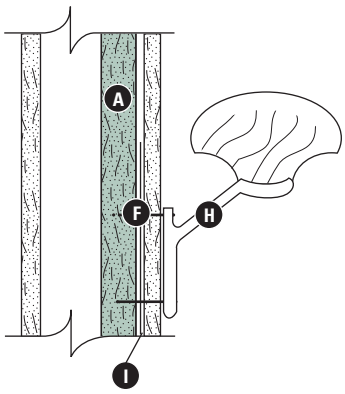

Steel Beam Offset

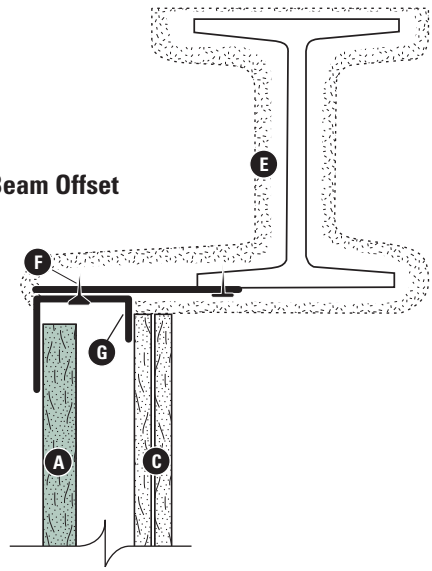

HVAC Duct Detail

A. C-T, C-H or I Studs 24" (610 mm) o.c.

B. J track

C. 1" (25.4 mm) ToughRock® Shaftliner

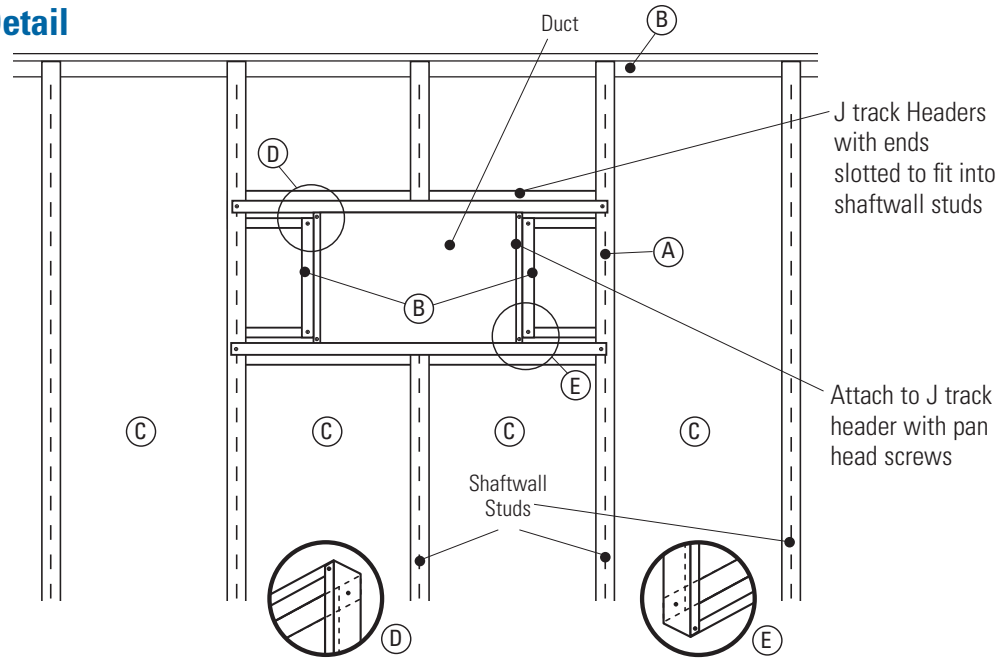

Recommendations

- Use a fastening plate to secure the J track whenever fasteners are closer than 4" (102 mm) to the end of the assembly. Setting the plate at the time of concrete construction will avoid spalling by mechanical fasteners.
- In structural steel-frame construction, install J track sections before applying spray-on fireproofing.
- Items to be anchored to the wall (cabinets, sinks, handrails, etc.) should be fastened to the C-T, C-H or I studs or to plates secured behind or between layers of 1/2" (12.7 mm) ToughRock® Fireguard C® Gypsum Board. (See handrail illustration on page 32.)
- Joint compounds should be applied at ambient temperatures above 50°F (10°C) with adequate ventilation.
- Use Type S screws for true 25-gauge (18 mils) steel framing. Use Type S-12 screws for true 20-gauge (33 mils) (or heavier) steel framing.
- It is important that the project structural engineer approves the type, size and maximum spacing of track fasteners to meet the design load requirements.

Recommendations and Limitations for Use

The following limitations together with the installation, handling, storage and other guidelines and recommendations contained in this guide are important to ensure the proper use and benefits of ToughRock® Shaftliner. Failure to strictly adhere to such recommendations and limitations will void the limited warranty provided by Georgia-Pacific Gypsum for such product. For additional details, please go to www.gpgypsum.com and select ToughRock® Shaftliner for warranty information.

- Non-load bearing.
- Can be used as exhaust ducts where temperatures do not exceed 125°F (52°C).
- Not to be used as an unlined air supply duct.
- Not designed for exposure to constant high-moisture conditions or direct water after building is complete.
- Elevator door assemblies require support independent of shaftwall partitions.
- Good construction practice calls for partition control joints to coincide with that of the building structure.
- Limiting loads and heights not to exceed design specification or data provided herein or by metal component supplier.
- Provide flexible sealant/caulk at partition perimeters and penetrations to avoid air leakage/whistling and dust collection.

Fire Rating Information

ToughRock® Fireguard X,® ToughRock® Fireguard X® Mold-Guard™ and ToughRock Fireguard C® Gypsum Board products have been classified by UL and included in numerous assembly designs listed by UL for hourly fire resistance ratings. Several ToughRock® Fireguard X® and ToughRock® Fireguard C® Gypsum Board products have also been classified by Underwriters Laboratories of Canada (ULC) for inclusion in fire resistance ratings. Each UL or ULC design lists specific manufacturers and products approved for use in the assembly. Products are identified as designated Types that correlate to specific board formulations. The Type designation appears on the UL or ULC label on the product. The following tables provide a quick and easy reference to identify current ToughRock Gypsum Board products and their designations in the UL or ULC directories.

UL Type Designation	Product Name
Type FG	1/2" (12.7 mm) ToughRock® Fireguard 45® Gypsum Board
	1/2" (12.7 mm) ToughRock® Fireguard 45® Stretch 54® Gypsum Board
Type LWX	5/8" (15.9 mm) ToughRock® Lite-Weight Fire-Rated Gypsum Board
Type TG-C	1/2" (12.7 mm) ToughRock® Fireguard C® Gypsum Board
	1/2" (12.7 mm) ToughRock® Fireguard C® Stretch 54® Gypsum Board
	5/8" (15.9 mm) ToughRock® Fireguard C® Gypsum Board
	5/8" (15.9 mm) ToughRock® Fireguard C® Stretch 54® Gypsum Board
	5/8" (15.9 mm) ToughRock® Fireguard C® Soffit Board
Type X	5/8" (15.9 mm) ToughRock® Fireguard X® Gypsum Board
	5/8" (15.9 mm) ToughRock® Fireguard X® Stretch 54® Gypsum Board
	5/8" (15.9 mm) ToughRock® Fireguard X® Gypsum Sheathing
	5/8" (15.9 mm) ToughRock® Fireguard X® Veneer Plaster Base
	5/8" (15.9 mm) ToughRock® Fireguard X® Abuse-Resistant Gypsum Board
	5/8" (15.9 mm) ToughRock® Fireguard X® Mold-Guard™ Gypsum Board
	5/8" (15.9 mm) ToughRock® Fireguard X® Mold-Guard™ Abuse-Resistant Gypsum Board
Type TP-6, Type TRSL	1" (25.4 mm) ToughRock® Shaftliner

ULC Type Designation	Product Name
Type C	1/2" (12.7 mm) ToughRock® Fireguard C® Gypsum Board
	1/2" (12.7 mm) ToughRock® Fireguard C® Stretch 54® Gypsum Board
	5/8" (15.9 mm) ToughRock® Fireguard C® Gypsum Board
	5/8" (15.9 mm) ToughRock® Fireguard C® Stretch 54® Gypsum Board
	5/8" (15.9 mm) ToughRock® Fireguard C® Soffit Board
Type X	5/8" (15.9 mm) ToughRock® Fireguard X® Gypsum Board
	5/8" (15.9 mm) ToughRock® Fireguard X® Stretch 54® Gypsum Board
	5/8" (15.9 mm) ToughRock® Fireguard X® Gypsum Sheathing
	5/8" (15.9 mm) ToughRock® Fireguard X® Veneer Plaster Base
	5/8" (15.9 mm) ToughRock® Fireguard X® Abuse-Resistant Gypsum Board
	5/8" (15.9 mm) ToughRock® Fireguard X® Mold-Guard™ Gypsum Board
	5/8" (15.9 mm) ToughRock® Fireguard X® Mold-Guard™ Abuse-Resistant Gypsum Board

All of these products are classified as "Type X" in accordance with ASTM C1396 and may be used in generic fire-rated assemblies. Please consult ASTM C1396 specific product information.

It is important that you consult a design professional and the appropriate fire resistance directory or test report for complete assembly information and related information. Georgia-Pacific Gypsum does not provide architectural or engineering services. For additional fire safety information concerning Georgia-Pacific Gypsum's products visit www.buildgp.com/safetyinfo.

High-Performance Gypsum Products from Georgia-Pacific

DensDeck® Roof Board	Fiberglass mat roof board used as the ideal thermal barrier and cover board to improve resistance to wind uplift, hail, foot traffic, fire and mold in a broad range of commercial roofing applications. Look for DensDeck Prime and DensDeck DuraGuard Roof Boards, too.
DensGlass® Sheathing	The original and universal standard of exterior gypsum sheathing offers superior weather resistance, with a 12-month limited warranty against delamination or deterioration during exposure to normal weather conditions. Look for the familiar GOLD color. GREENGUARD listed for microbial resistance.
DensGlass® Shaftliner	These specially-designed panels are perfect for moisture-prone vertical or horizontal shafts, interior stairwells and area separation wall assemblies. 12-month limited warranty against delamination or deterioration during exposure to normal weather conditions. GREENGUARD listed for microbial resistance.
DensArmor Plus® Interior Panel	High-performance interior panel accelerates scheduling because it can be installed before the building is dried-in. A 12-month limited warranty against delamination or deterioration during exposure to normal weather conditions. GREENGUARD and GREENGUARD Gold certified for low VOC emissions. Listed in CHPS® High Performance Product Database as a low emitting product. GREENGUARD listed for microbial resistance.
DensArmor Plus® Abuse-Resistant Interior Panel	With the same benefits as the DensArmor Plus® Interior Panel, these also offer added resistance to scuffs, abrasions and surface indentations; ideal for healthcare facilities and schools. GREENGUARD and GREENGUARD Gold certified for low VOC emissions. Listed in CHPS® High Performance Product Database as a low emitting product. GREENGUARD listed for microbial resistance.
DensArmor Plus® Impact-Resistant Interior Panel	With even greater durability than abuse-resistant panels, these have an embedded impact-resistant mesh for the ultimate resistance in high traffic areas; ideal for healthcare facilities, schools and correctional institutions. GREENGUARD and GREENGUARD Gold certified for low VOC emissions. Listed in CHPS® High Performance Product Database as a low emitting product. GREENGUARD listed for microbial resistance.
DensShield® Tile Backer	Acrylic-coated tile backer stops moisture at the surface. Lightweight and strong, they are built for speed on the job site. Conforms to requirements of 2012 IBC/IRC Code. GREENGUARD listed for microbial resistance.
ToughRock® Gypsum Board	Paper-faced line of gypsum panels for a variety of applications including interior wall and ceiling applications, abuse-resistant boards, and panels for use in fire-rated assemblies. ToughRock products are GREENGUARD and GREENGUARD Gold certified for low VOC emissions. Listed in CHPS® High Performance Product Database as a low emitting product.
ToughRock® Mold-Guard™ Gypsum Board	ToughRock Mold-Guard Gypsum Board products have enhanced mold resistance in comparison to regular ToughRock® Gypsum Boards. They are GREENGUARD and GREENGUARD Gold Certified for low VOC emissions and are listed in the CHPS® High Performance Product Database as a low emitting product. The ToughRock Mold-Guard Gypsum Board is also listed as GREENGUARD microbial resistant.
DensElement™ Barrier System	DensElement Barrier System delivers the same advantages of DensGlass Sheathing while incorporating AquaKOR™ Technology, a water barrier system that maintains high vapor permeability mitigating the risk of moisture in the wall cavity. With this innovation built into its core, DensElement eliminates the need for additional barrier (WRB-AB) saving time, labor and materials.

Georgia-Pacific
Gypsum

U.S.A. Georgia-Pacific Gypsum LLC
CANADA Georgia-Pacific Canada LP

SALES INFORMATION AND ORDER PLACEMENT

U.S.A. West: **1-800-824-7503**
Midwest: **1-800-876-4746**
South Central: **1-800-231-6060**
Southeast: **1-800-327-2344**
Northeast: **1-800-947-4497**

CANADA Canada Toll Free: **1-800-387-6823**
Quebec Toll Free: **1-800-361-0486**

TECHNICAL HOTLINE
U.S.A. and Canada: **1-800-225-6119**

TRADEMARKS – Unless otherwise noted, all trademarks are owned by or licensed to Georgia-Pacific Gypsum LLC. LEED, USGBC and related logo are trademarks owned by the U.S. Green Building Council and are used by permission. CHPS is a trademark owned by Collaborative for High Performance Schools Inc.

WARRANTIES, REMEDIES AND TERMS OF SALE – For current warranty information, please go to www.buildgp.com/warranties and select the applicable product. All sales by Georgia-Pacific are subject to our Terms of Sale available at www.buildgp.com/tc.

UPDATES AND CURRENT INFORMATION – The information in this document may change without notice. Visit our website at www.gpgypsum.com for updates and current information.

CAUTION: For product fire, safety and use information, go to buildgp.com/safetyinfo or call 1-800-225-6119.

HANDLING AND USE – CAUTION: This product contains fiberglass facings which may cause skin irritation. Dust and fibers produced during the handling and installation of the product may cause skin, eye and respiratory tract irritation. Avoid breathing dust and minimize contact with skin and eyes. Wear long sleeve shirts, long pants and eye protection. Always maintain adequate ventilation. Use a dust mask or NIOSH/MSHA approved respirator as appropriate in dusty or poorly ventilated areas.

FIRE SAFETY CAUTION – Passing a fire test in a controlled laboratory setting and/or certifying or labeling a product as having a one-hour, two-hour, or any other fire resistance or protection rating and, therefore, as acceptable for use in certain fire rated assemblies/systems, does not mean that either a particular assembly/system incorporating the product, or any given piece of the product itself, will necessarily provide one-hour fire resistance, two-hour fire resistance, or any other specified fire resistance or protection in an actual fire. In the event of an actual fire, you should immediately take any and all actions necessary for your safety and the safety of others without regard for any fire rating of any product or assembly/system.

www.gpgypsum.com

©2017 Georgia-Pacific Gypsum LLC. All rights reserved. Printed in the U.S.A. 01/17. GP Lit. Item #622604.