GLACIER BAY®

Specifications

OSWELL 4 IN. CENTERSET SINGLE HANDLE BATHROOM FAUCET

INTERNET	MODEL	SKU #	FINISH
333017961	HD67958W-6101	1013054696	Chrome
333017940	HD67958W-6104	1013054693	Brushed Nickle
333017955	HD67958W-6110H	1013054695	Matte Black
333017987	HD67958W-614409	1013270950	Brushed Gold

FEATURES

- Requires 1-Hole Or 3-Hole Sink with 4" On-Center
- Max Flow Rate: 1.2 gpm (4.5 L/min) at 60 psi
- Max Countertop Thickness: 1 1/4"
- Spout Reach: 4 23/32"
- Spout Height: 3 3/4"
- Ceramic Valve for Lifetime Drip-Free Operation
- With Zinc Lever Handle
- With Pop Up Assembly

CODE COMPLIANCE

- IAPMO Certified: ASME A112.18.1/CSA B125.1
- NSF 61 Section 9
- NSF 372
- Calgreen Certified
- EPA WaterSense Certified
- Meets AB 1953 Lead Standard
- ADA Compliant

WARRANTY

- Limited Lifetime Warranty

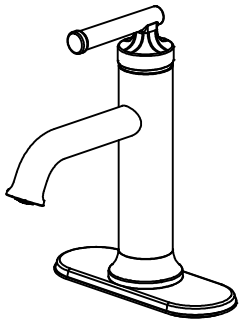

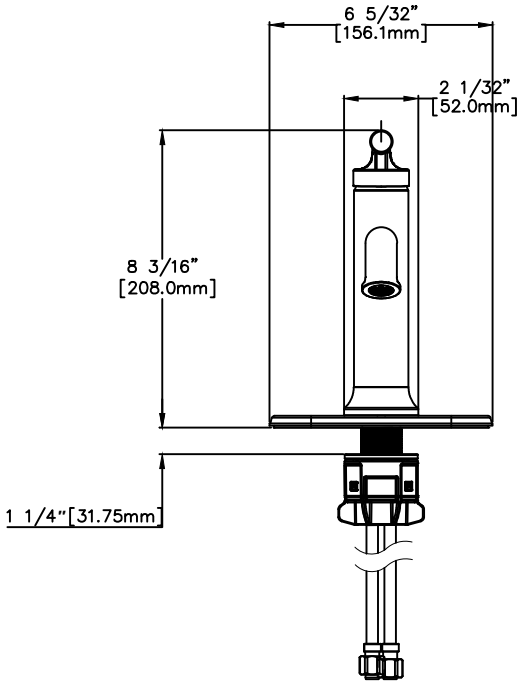

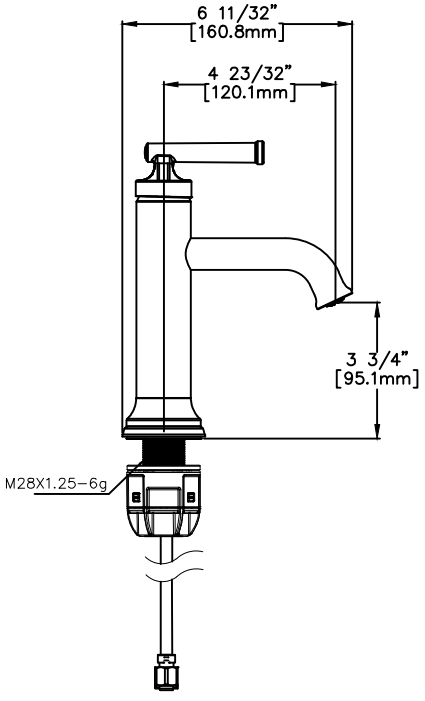



INSTALLATION DIMENSIONS

Glacier Bay reserves the right to make changes in specifications and materials and to change and discontinue models, both without notice or obligation. Dimensions are for reference only.