GLACIER BAY®

USE AND CARE GUIDE

SINGLE BOWL GRANITE SINK

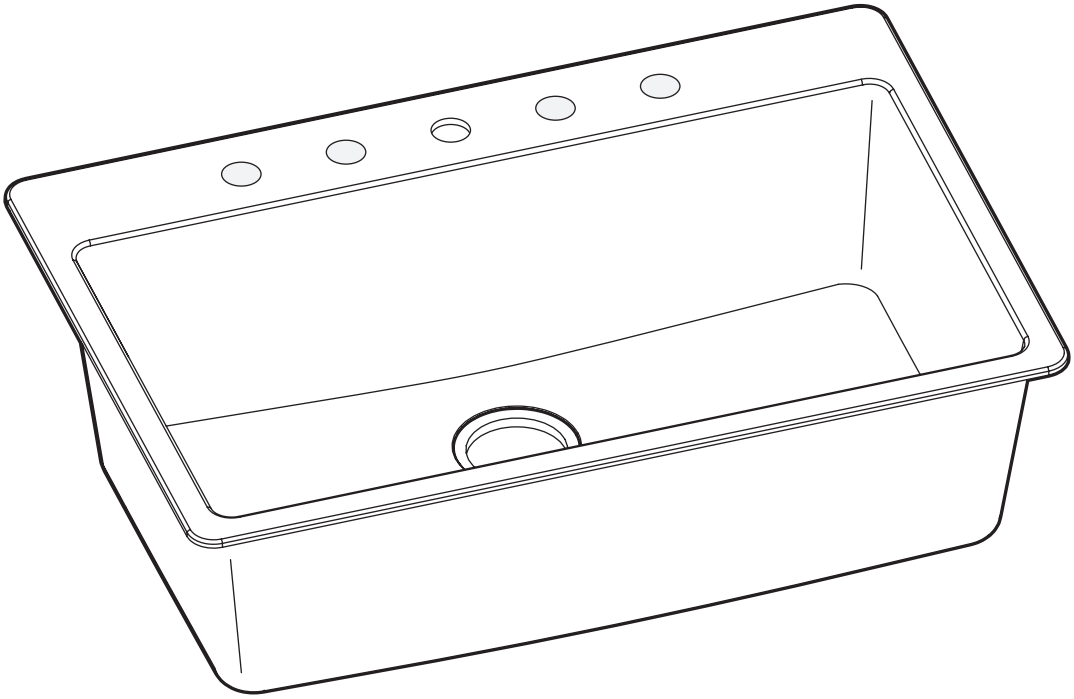

Questions, problems, missing parts? Before returning to the store,
call Glacier Bay Customer Service
8 a.m. - 7 p.m., EST, Monday - Friday, 9 a.m. - 6 p.m., EST, Saturday

1-855-HD-GLACIER

HOMEDEPOT.COM/GLACIERBAY

THANK YOU

We appreciate the trust and confidence you have placed in Glacier Bay through the purchase of this sink. We strive to continually create quality products designed to enhance your home. Visit us online to see our full line of products available for your home improvement needs. Thank you for choosing Glacier Bay!

Table of Contents

Safety Information 2
Warranty 2
Pre-Installation 3
Top-mount Installation 5
Under-counter Installation 6
Care and Cleaning 7

Safety Information

Before installing this sink, read this instruction manual carefully. It contains important information concerning the safe installation, operation, and maintenance of your sink.

Retain this manual for future use. In the event of sale, transfer, or relocation, ensure this manual remains with the sink.

NOTICE: Avoid leaving wet sponges, salt, and corrosive substances on the sink for long periods of time. Lines and scratches may be caused by improper use of the sink.

NOTICE: Do not place the sink on its side as there is a risk of damage.

WARNING: Keep all packaging materials out of the reach of children to prevent possible choking or suffocation.

WARNING: Use caution when installing the sink. There is a risk of crushing your fingers when inserting the sink into the installation location.

CAUTION: Never place hot objects such as hot pans on the sink. Wait until the object has cooled or use a heat resistant plate when placing hot objects on the sink surface.

Warranty

LIMITED LIFETIME WARRANTY

This limited lifetime warranty is extended to the original purchaser of this sink. The manufacturer warrants this sink to be free from all manufacturing defects in material and workmanship. The manufacturer will repair or replace, at no charge, excluding labor, any sink that is proven to be defective under normal use. An equivalent replacement will be issued to the original owner provided the defective sink was installed in accordance with the installation procedures, used and cleaned as recommended, and not damaged due to abuse, misuse, or negligence. Chips, scratches, and stains are not deemed to be manufacturing defects. The manufacturer will not be held liable for chips, scratches, and stains that can occur under normal use over a period of time. Please refer to the cleaning instructions to maintain your sink in its original appearance. The manufacturer shall not be held liable under this warranty where the sink has been used in a non-domestic application, improperly installed, or damaged from the impact caused by a heavy object being dropped on the sink or from improper handling.

The manufacturer shall not be liable for any inconvenience or expense for material or labor related to the removal or replacement of a defective sink or for any loss or damage to any person or property whatsoever resulting from the defective sink. All transportation costs to and from the point of purchase will be the responsibility of the purchaser.

Any sink returned must be in the original packaging and include all the accompanying accessories, parts, and documentation. The manufacturer reserves the right to inspect any sink reported to be defective prior to replacement of the sink.

WARRANTY EXCLUSIONS

Excluded are any accessories that accompany the sink (strainers, waste fittings, waste chutes, etc.). The manufacturer guarantees all sink accessories to be free from manufacturing defects for one year. The manufacturer is not responsible or liable for indirect, special, or consequential damages arising out of or in connection with the use or performance of its products and its liability under this warranty is limited to the replacement of the defective material at the location of purchase.

The original dated sales receipt must be retained by the customer and is the only acceptable proof of purchase. The manufacturer makes no additional warranties, express or implied, and any implied warranty including that of merchantability or fitness for a particular purpose is limited in its duration to the duration of the written limited warranties set forth herein.

OBLIGATION OF THE ORIGINAL OWNER

No employee, agent, or other person is authorized to provide any warranty on behalf of The Home Depot for a Glacier Bay product that is in addition to or different from the warranty stated above unless the warranty has been previously approved by an authorized representative. This warranty gives you specific legal rights and you may also have other rights which may vary from province to province.

Contact the Customer Service Team at 1-855-HD-GLACIER or visit www.HOMEDEPOT.COM/GLACIERBAY.

Pre-Installation

PLANNING INSTALLATION

Compare all parts to the Hardware Included and Package Contents lists and verify that all parts are included. Inspect all parts for damage. If there are missing parts or visible damage to the sink, do not install and contact the Customer Service Team at 1-855-HD-GLACIER.

NOTE: You can mount this sink using either the top-mount or under-counter procedure in this document.

TOOLS REQUIRED

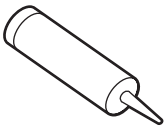
Silicone sealant

Safety goggles

Phillips screwdriver

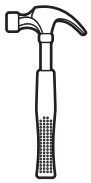
Hammer

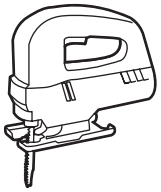
Jigsaw

Flathead screwdriver

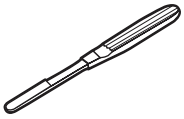
Tungsten rasp

HARDWARE INCLUDED

NOTE: Hardware not shown to actual size.

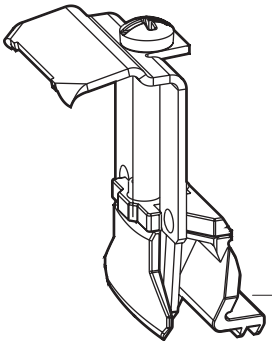
AA

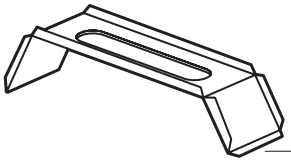
BB

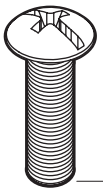
CC

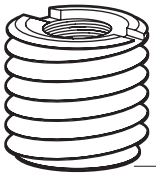
DD

Part	Description	Quantity
AA	Top-mount clip with screw	6-8*
BB	Mounting bracket	6-8*
CC	Mounting screw	6-8*
DD	Threaded nut	6-8*
*Quantity is 6 for STHCN100XWS and 8 for STHMON100L.		

PACKAGE CONTENTS

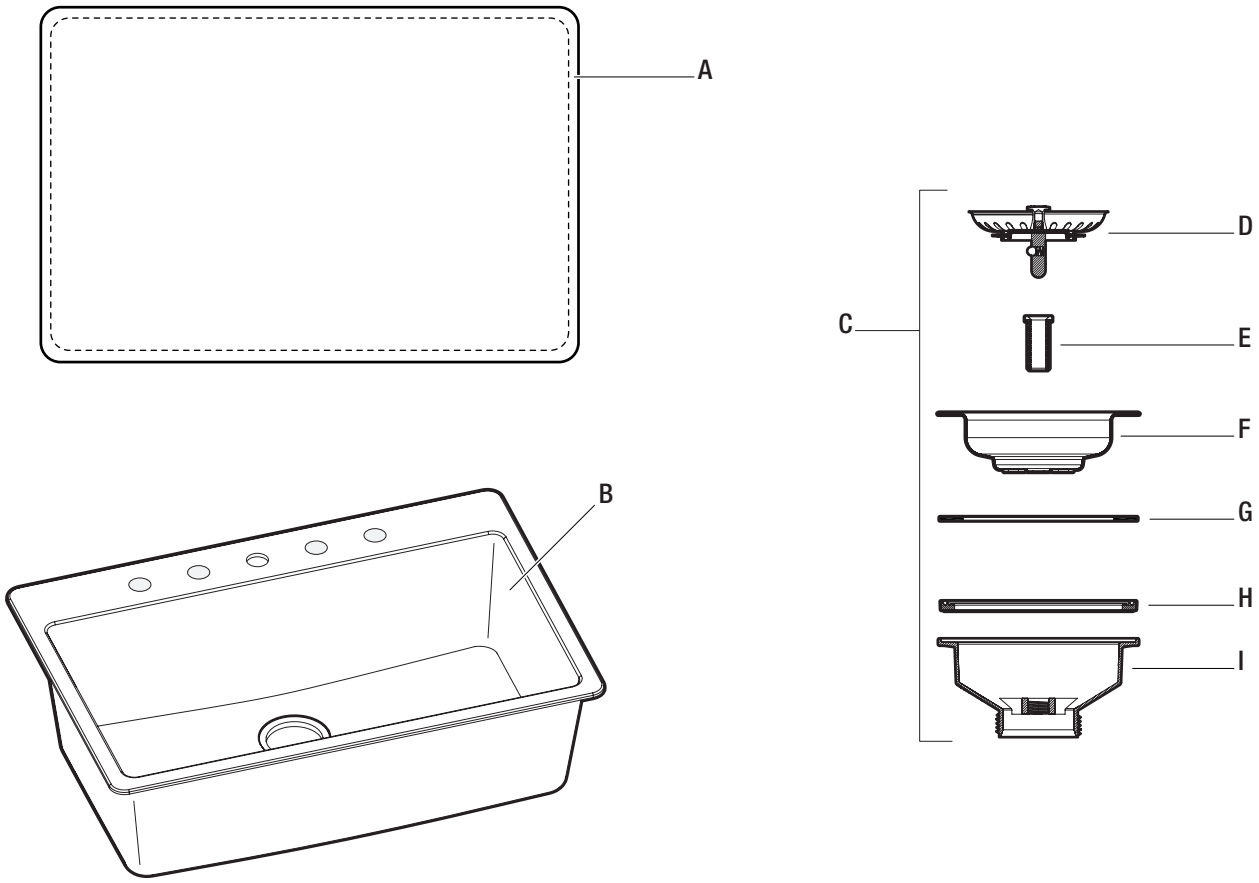

Part	Description	Quantity
A	Template	1
B	Sink	1
C	Drain assembly	2
D	Ball lock basket	2
E	Body assembly	2
F	Gasket	2
G	Housing	2
H	Lock nut	2
I	Polywasher	2
J	Coupling nut	2

Top-mount Installation

1 Preparing the installation location

- ☐ If necessary, remove the old sink and disconnect the water supply lines underneath the sink.
- ☐ If your sink does not already have an existing installation location, place the template (A) on the sink installation location and trace the locations to cut out.
- ☐ Cut out the location for the sink.

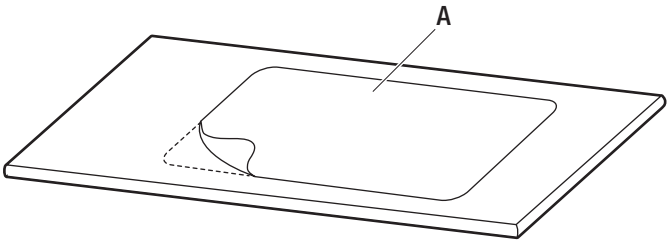

2 Preparing the sink for installation

CAUTION: Do not turn the sink over in order to push out the pre-scored hole on the sink. This will damage the sink. Push out the pre-scored hole as this diagram shows.

This is an optional step for faucets and/or accessories that require additional holes.

- ☐ Round stickers on the sink faucet deck indicate the place where additional pre-scored holes are located. Check that this sticker has not been moved. Also note that one hole has already been drilled.
- ☐ If additional holes are needed, it is recommended to place the sink into a pre-cut opening of your countertop (sink should be oriented with the faucet deck closest to you). This will support the outer edge of the sink to prevent damage during the knock-out process.
- ☐ With a blunt object such as a flathead screwdriver and hammer, make the initial hole.
- ☐ Complete the hole with a small tungsten rasp and remove the stickers on the sink for any pre-marked holes you do not need.

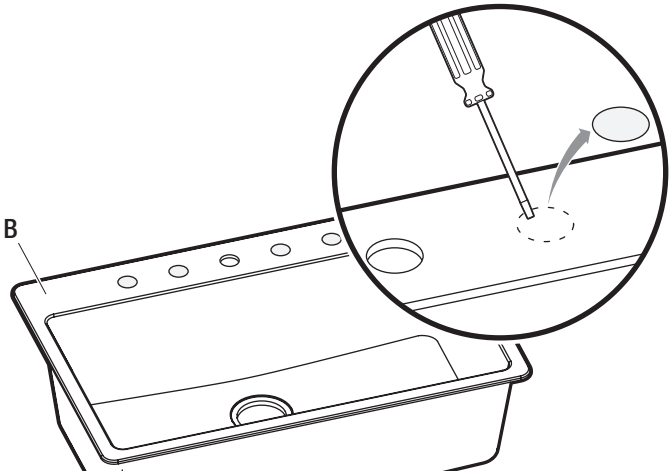

3 Installing the mounting brackets

- ☐ Turn the sink over and press the mounting clips (AA) into the slotted bracket until fully inserted (if needed, hammer lightly for same results).
- ☐ Apply silicone sealant (not included) along the edge of the sink (B).

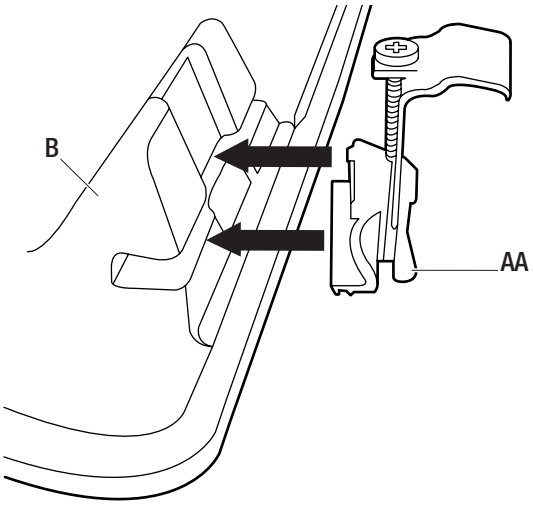

Top-mount Installation (continued)

4 Installing the sink

- Place the sink (B) into the countertop and remove any excess sealant that comes out from the edges.
- Tighten the screws on the mounting clips (AA) underneath the sink to anchor the sink (B).

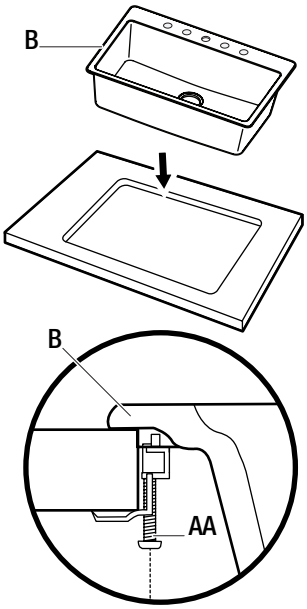

5 Installing the drain assembly

- Place the top gasket (G) on top of the drain hole in the sink, followed by the body assembly (F), lock gasket (E), and basket (D).
- From underneath the sink (B), position the bottom gasket (H) over the lock gasket (E) and twist the housing (I) into place over the bottom gasket (H) and lock gasket (E). Repeat for the second drain hole.

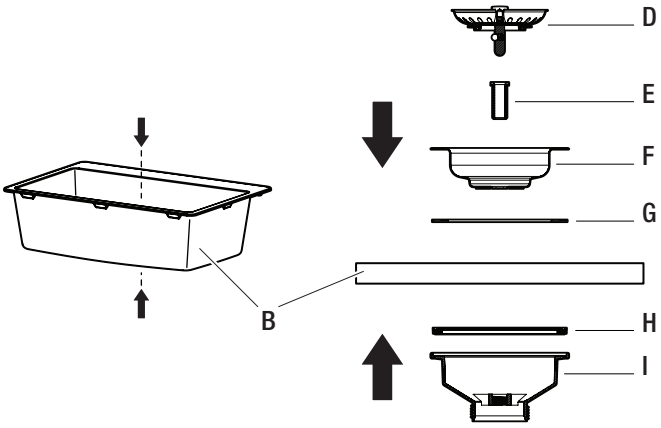

Under-counter Installation

1 Preparing the installation location

CAUTION: This sink is not suitable for installations in particle board.

- If necessary, remove the old sink and disconnect the water supply lines underneath the sink.
- If your sink does not already have an existing installation location, place the template (A) on the sink installation location and trace the locations to cut out.
- Cut out the location for the sink.

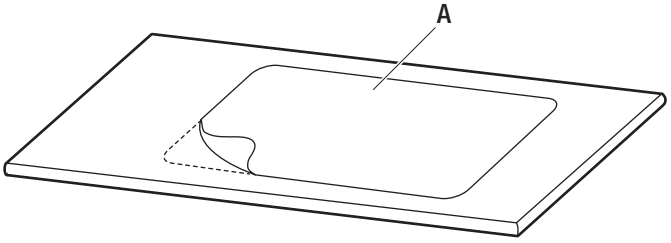

2 Preparing to mount the sink

- From underneath the countertop, prepare 1-3/16 in. holes around the perimeter of the installation location. A typical installation will have two holes at each corner of the sink.
- Place the threaded nuts (DD) securely into each of the holes underneath the counter.

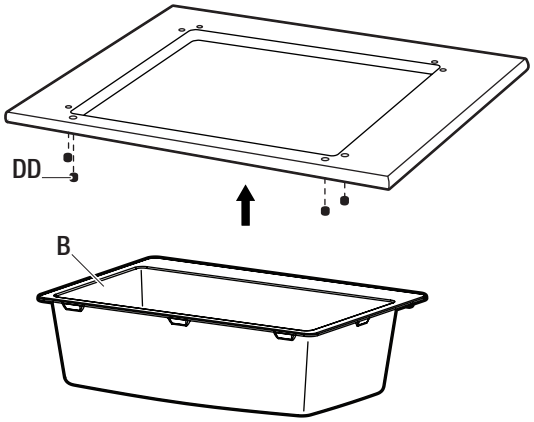

Under-counter Installation (continued)

3 Mounting the sink

- From underneath the countertop, apply silicone sealant around the perimeter of the installation location.
- Place the sink (B) underneath the countertop by inserting mounting screws (BB) through the mounting brackets (AA) and into the threaded nuts (CC).
- Tighten the screws in a criss-cross pattern to ensure that the sink is installed evenly underneath the counter.

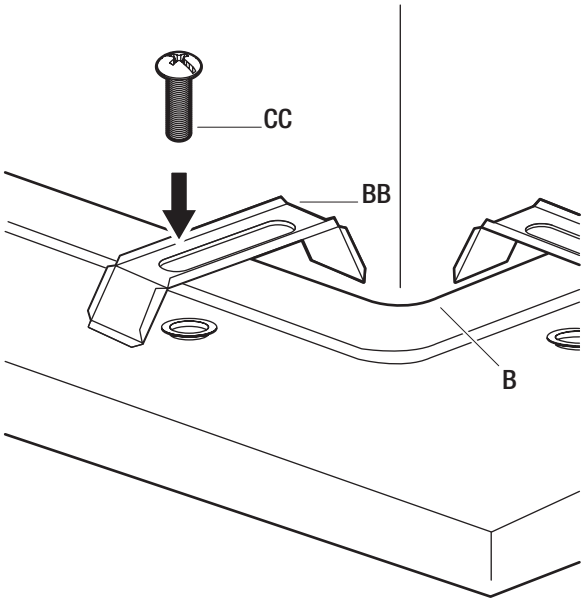

4 Installing the drain assembly

- Place the top gasket (G) on top of the drain hole in the sink, followed by the body assembly (F), lock gasket (E), and basket (D).
- From underneath the sink (B), position the bottom gasket (H) over the lock gasket (E) and twist the housing (I) into place over the bottom gasket (H) and lock gasket (E).

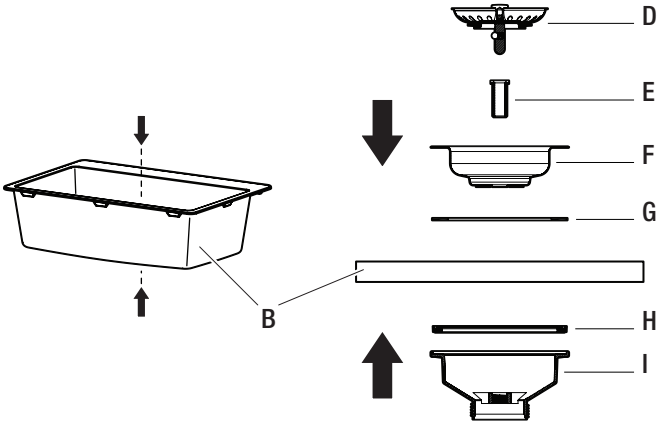

Care and Cleaning

- Do not use abrasive cleaning creams or powders, concentrated caustic soda, formic acid, or anything highly corrosive. For more information on removing difficult stains, contact Customer Service at 1-855-HD-GLACIER or visit your local Home Depot store.
- Clean with a sponge or soft dish cloth and gentle sink soap. For stains that are difficult to remove, such as calcium deposits, use eraser sponges, vinegar-based cleaners, and lime removers.
- Rinse the sink with hot water and dry the sink with a soft absorbent cloth.
- Fruit juices, coffee, and tea can stain the surface of your sink if not removed. Rinse or wipe the sink promptly after these substances make contact with the sink.
- Never use steam or high-pressure cleaning systems to clean your sink.

GLACIER BAY®

Questions, problems, missing parts? Before returning to the store,
call Glacier Bay Customer Service
8 a.m. - 7 p.m., EST, Monday-Friday, 9 a.m. - 6 p.m., EST, Saturday

1-855-HD-GLACIER

HOMEDEPOT.COM/GLACIERBAY

Retain this manual for future use.