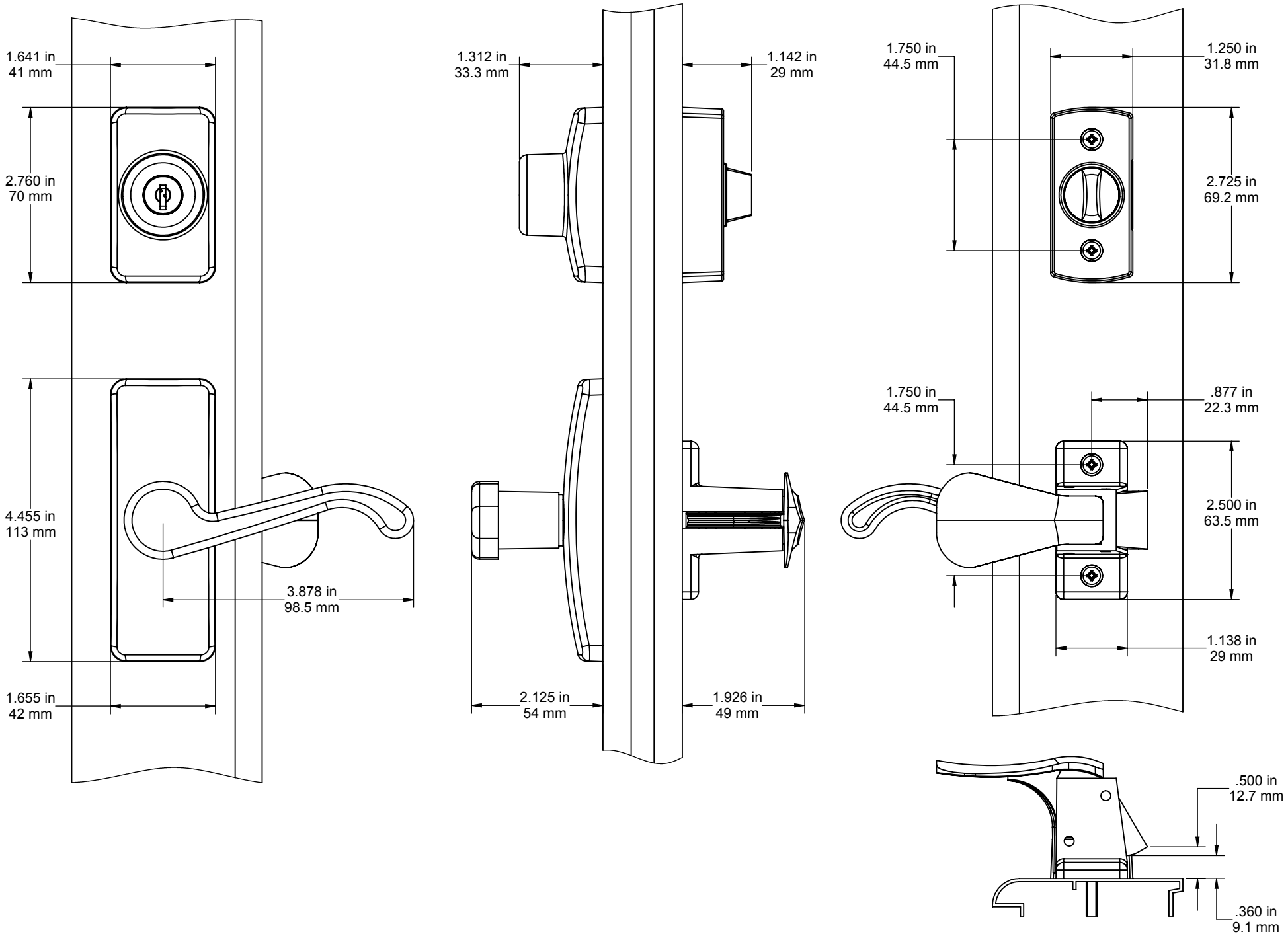
1.641 in
41 mm
2.760 in
70 mm
4.455 in
113 mm
3.878 in
98.5 mm
1.655 in
42 mm
1.312 in
33.3 mm
1.142 in
29 mm
2.125 in
54 mm
1.926 in
49 mm
1.750 in
44.5 mm
1.250 in
31.8 mm
2.725 in
69.2 mm
1.750 in
44.5 mm
.877 in
22.3 mm
2.500 in
63.5 mm
1.138 in
29 mm
.500 in
12.7 mm
.360 in
9.1 mm

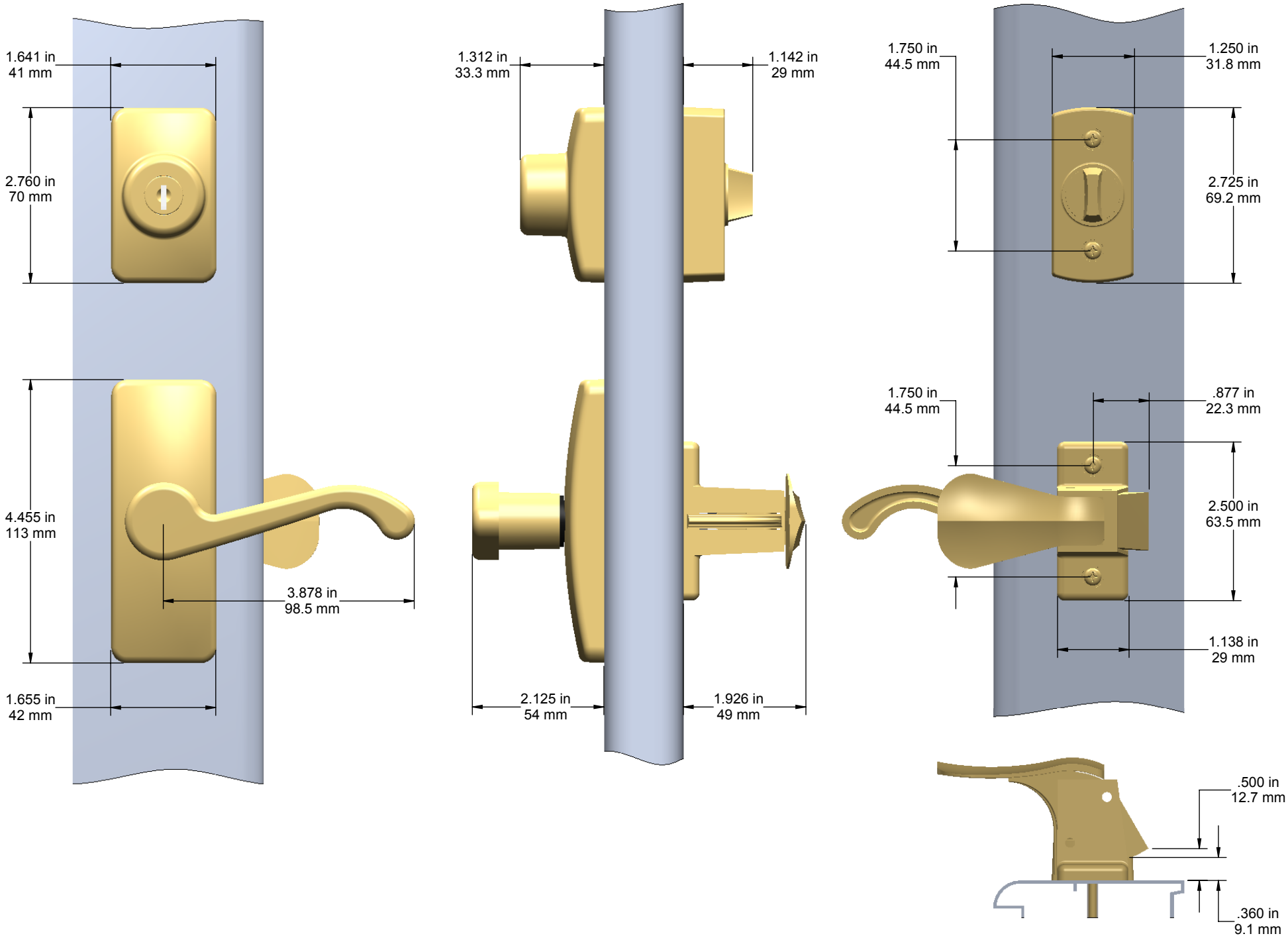
1.641 in
41 mm
2.760 in
70 mm
4.455 in
113 mm
3.878 in
98.5 mm
1.655 in
42 mm
1.312 in
33.3 mm
1.142 in
29 mm
2.125 in
54 mm
1.926 in
49 mm
1.750 in
44.5 mm
1.250 in
31.8 mm
2.725 in
69.2 mm
1.750 in
44.5 mm
.877 in
22.3 mm
2.500 in
63.5 mm
1.138 in
29 mm
.500 in
12.7 mm
.360 in
9.1 mm