REPAIR SHEET

BRAND

RYOBI

MODEL NO.

RY40HPLM08

MFG. NO.

106795003

DESCRIPTION

40 Volt 20 in. Lawn Mower

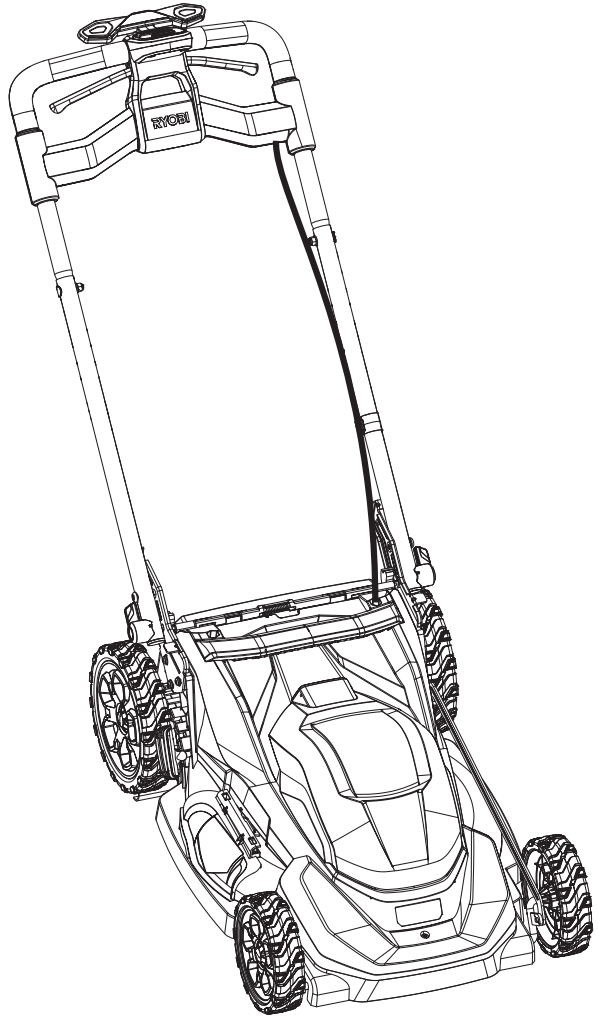

TTI OUTDOOR POWER EQUIPMENT, INC.

P.O. Box 1288, Anderson, SC 29622 ■ 1-800-525-2579 ■ **www.ryobitools.com**

7-16-26 (Rev:01)

The model number and manufacturing location will be found on a label attached to the product. Always mention this information in all communications regarding this product and when ordering parts.

RY40HPLM08

FIGURE A

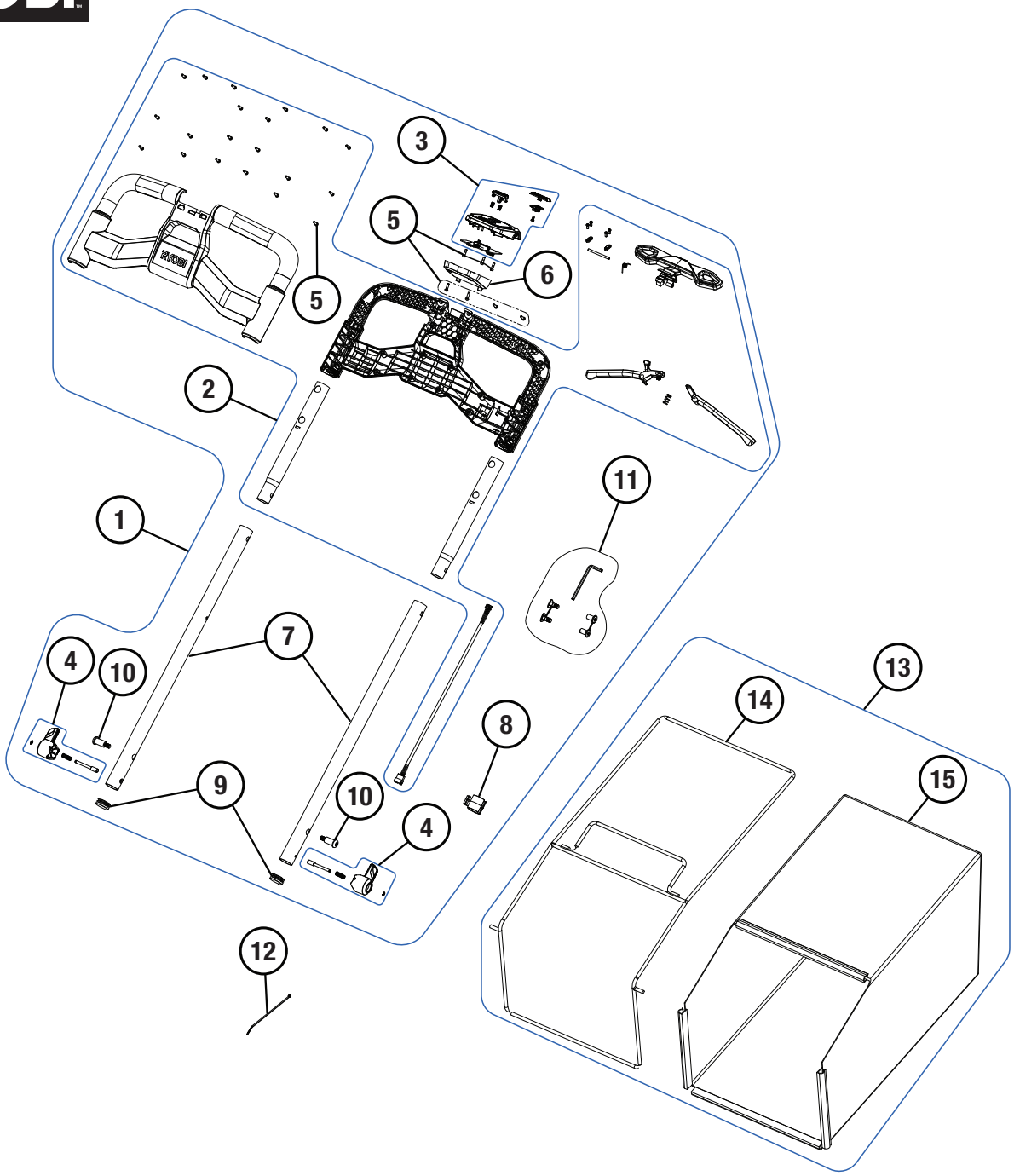

PARTS LIST — FIGURE A

KEY NO.	PART NO.	DESCRIPTION	QTY.
1	205691021	Full Handle Assembly	1
2	205691014	Upper Hanlde Assembly	1
3	205691006	Start and Speed Controller Assembly	1
4	205691019	Adjustment Knob Kit	2
5	660024061	Screw (M4 x 14 mm, T20 Torx Hd.)	27
6	554144001	Rear POD Housing	1
7	687586001	Lower Handle Tube	2
8	544302001	Wire Harness Clip	1

KEY NO.	PART NO.	DESCRIPTION	QTY.
9	529329002	Tube End Cap	2
10	663149001	Shoulder Bolt (M8 x 35.7mm, T45 Torx Hd.)	2
11	205691024	One-Time Assembly Hardware Kit	1
12	790055001	Cable Tie	1
13	205691013	Grass Catcher Assembly	1
14	677036001	Grass Catcher Frame	1
15	317926004	Grass Catcher Bag	1

RY40HPLM08

FIGURE B

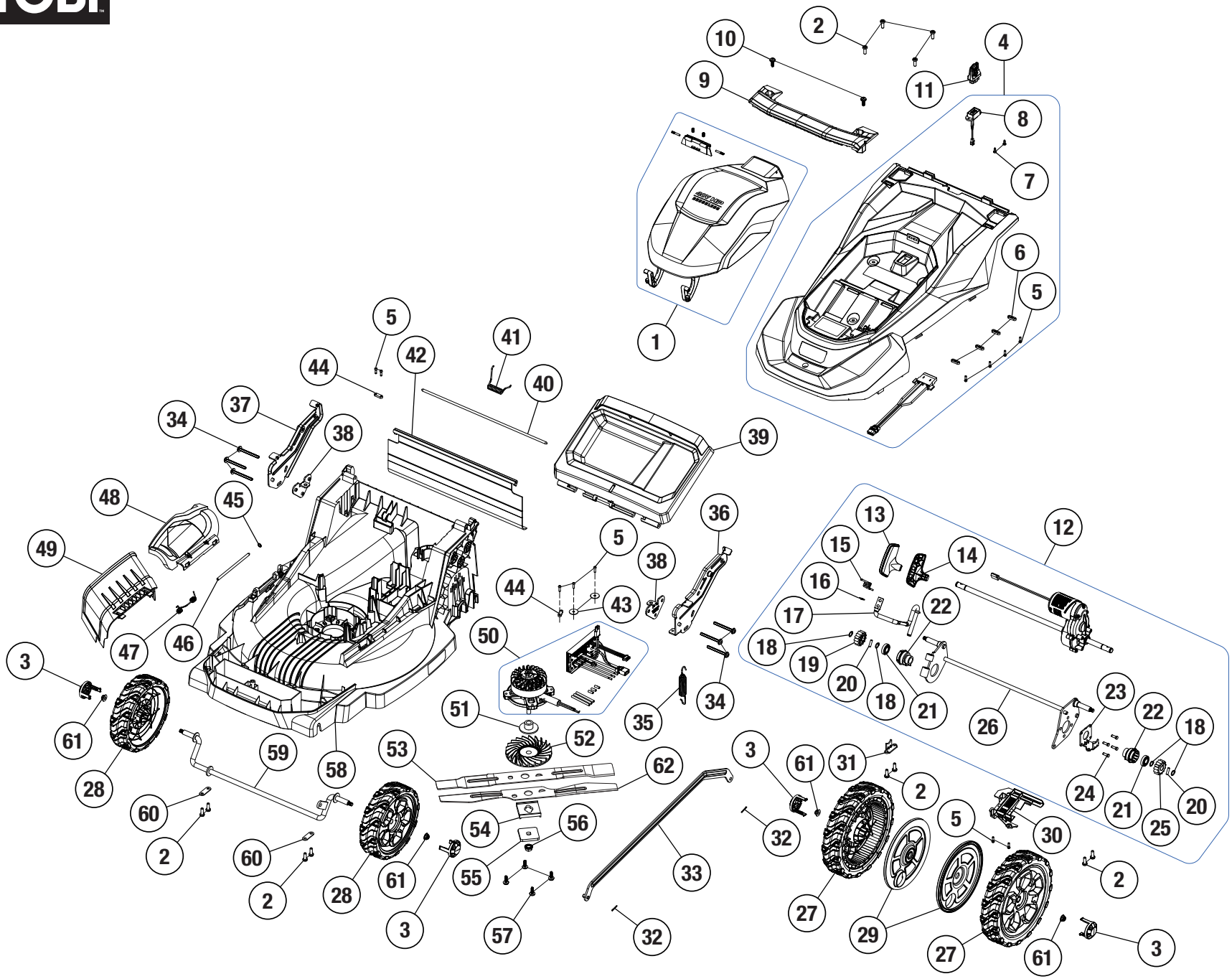

RY40HPLM08

PARTS LIST — FIGURE B

KEY NO.	PART NO.	DESCRIPTION	QTY.
1	205691018	Battery Cover Assembly	1
2	664004001	Screw (1/4 in. x 0.75 in., T30 Torx Hd.)	12
3	553589001	Wheel Hub Cap	4
4	205691003	Top Cover and Battery Harness Assembly	1
5	660024061	Screw (M4 x 14 mm, T20 Torx Hd.)	11
6	513211001	Cord Clip	4
7	660608001	M4 Screw (M4 x 12 mm, T20 Torx Hd.)	2
8	205691020	Key Base w/ Wire Harness	1
9	554142001	Carry Handle	1
10	663156001	Screw (M6 x 30 mm, T30 Torx Hd.)	2
11	205691012	Start Key	1
12	205691015	Rear Axle Assembly	1
13	552709001	Left Height Adjstment Knob	1
14	552708001	Right Height Adjstment Knob	1
15	684945001	Height Adjustment Lever Spring	1
16	679044001	E-Ring (No. 8)	1
17	623708001	Height Adjustment Lever Arm	1
18	690698001	Snap Ring	4
19	616363002	Right Drive Gear	1
20	622068004	Gear Pin	2
21	682164001	Ball Bearing (ID12.7 x OD28.6 x 8 mm)	2
22	544086001	Bearing Cup	2
23	656131002	Transmission Mounting Plate	1
24	660927002	Screw (M5 x 14.5 mm, T20 Torx Hd.)	4
25	616363003	Left Drive Gear	1
26	623707001	Rear Axle	1
27	318565014	Wheel (10 in.)	2
28	318565013	Wheel (8 in.)	2
29	554131001	Wheel Dust Cover	2
30	555088006	Transmission Cover Plate	1
31	639116011	Rear Axle Press Plate	1

KEY NO.	PART NO.	DESCRIPTION	QTY.
32	678279004	Cotter Pin	2
33	656079005	Linkage Bar	1
34	663155001	Screw (M6 x 64 mm, T30 Torx Hd.)	6
35	687436002	Spring	1
36	656415004	Left Handle Bracket	1
37	656416004	Right Handle Bracket	1
38	657369003	Nut Plate	2
39	205691004	Rear Door With Label	1
40	622755002	Door Axle	1
41	698995002	Rear Door Spring	1
42	535475002	Trailing Shield	1
43	678334001	Washer	2
44	513211001	Cord Clip	2
45	678490001	Retaining Ring	1
46	622893001	Side Cover Hinge Rod	1
47	687250003	Side Discharge Cover Spring	1
48	205691001	Side Discharge Cover w/ Label	1
49	543958001	Side Discharge Chute	1
50	205691017	Motor and Controller Assembly	1
51	613427001	Motor Bushing	1
52	544676001	Fan Blade Adapter	1
53	656080009	Blade (20 in.)	1
54	526920003	Plastic Blade Spacer Plate	1
55	639118002	Metal Blade Spacer Plate	1
56	679075001	Hex Nut (M10)	1
57	663156001	Screw (M6 x 30 mm, T30 Torx Hd.)	4
58	205691005	Deck with Label	1
59	699599003	Front Axle	1
60	639116012	Axle Press Plate	2
61	662974001	Flange Nut (M8 x 8 mm)	4
62	682609003	20 in Top Blade	1

RY40HPLM08

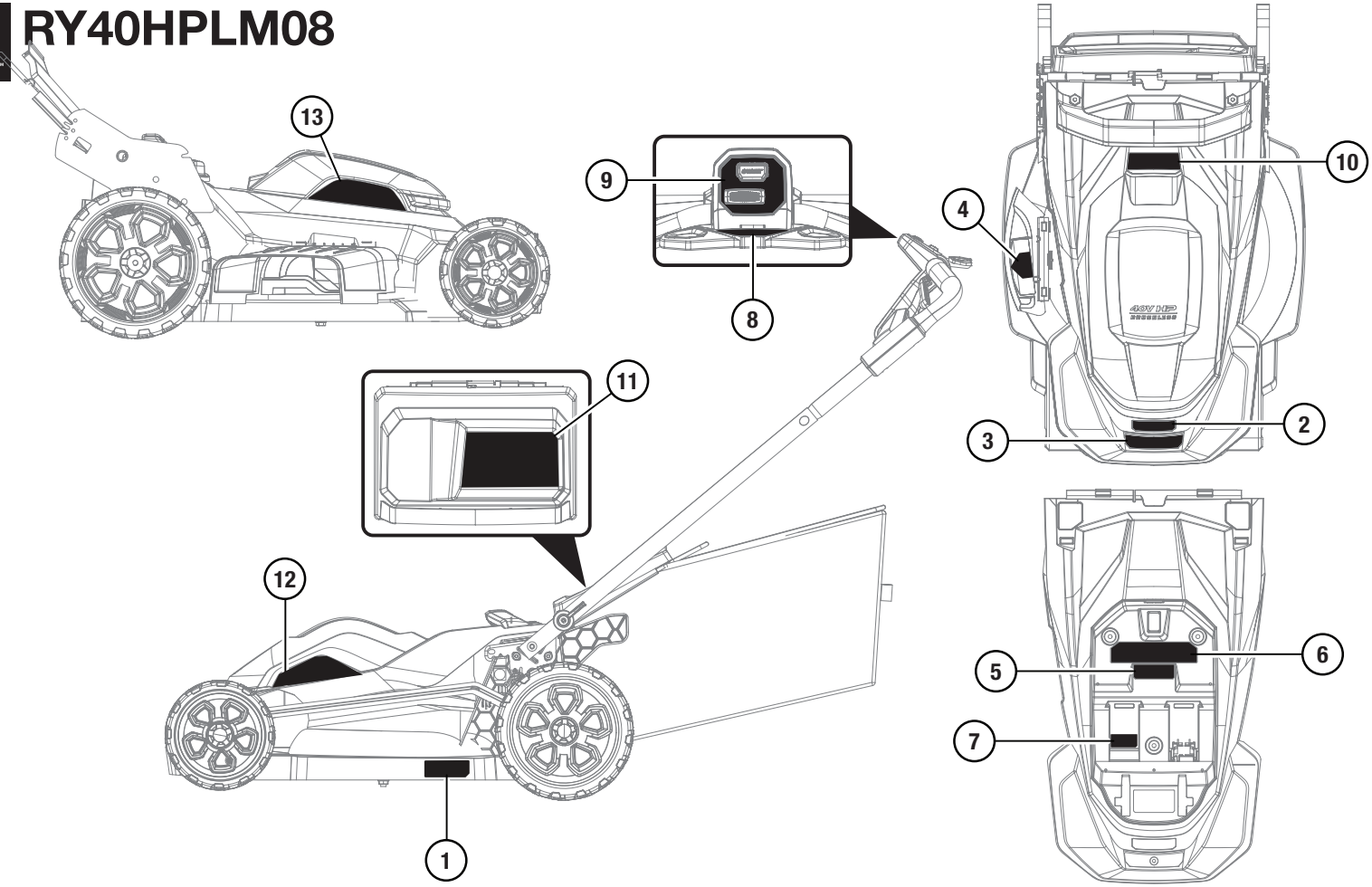

PARTS LIST — LABELS

KEY NO.	PART NO.	DESCRIPTION	QTY.
1	940168013	20" Deck Label	1
2	941201176	RYOBI Logo Label	1
3	940168012	Self Propelled Label	1
4	941641001	Hands and Feet Danger Label	1
5	940168011	QR Code Label	1
6	940168009	Wet Conditions Label	1
7	940779399	Battery Storage Label	1

KEY NO.	PART NO.	DESCRIPTION	QTY.
8	940168058	Start Instructions Label	1
9	940168010	Speed Selector Label	1
10	940168007	Warning Icon Label	1
11	940168008	Danger Label	1
12	940168080	Crosscut Hero Label	1
13	940168081	Crosscut Non-Hero Label	1

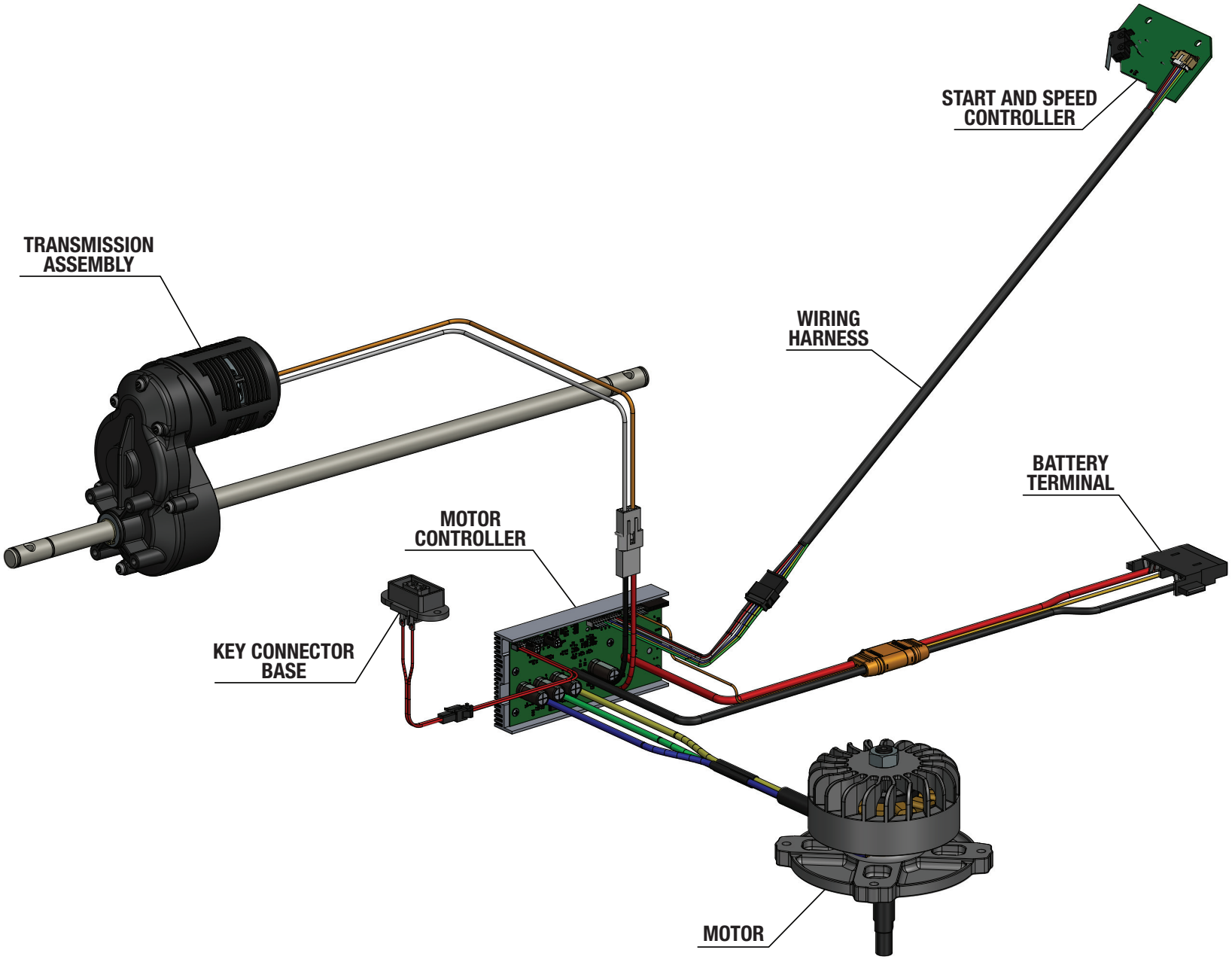

WIRING DIAGRAM