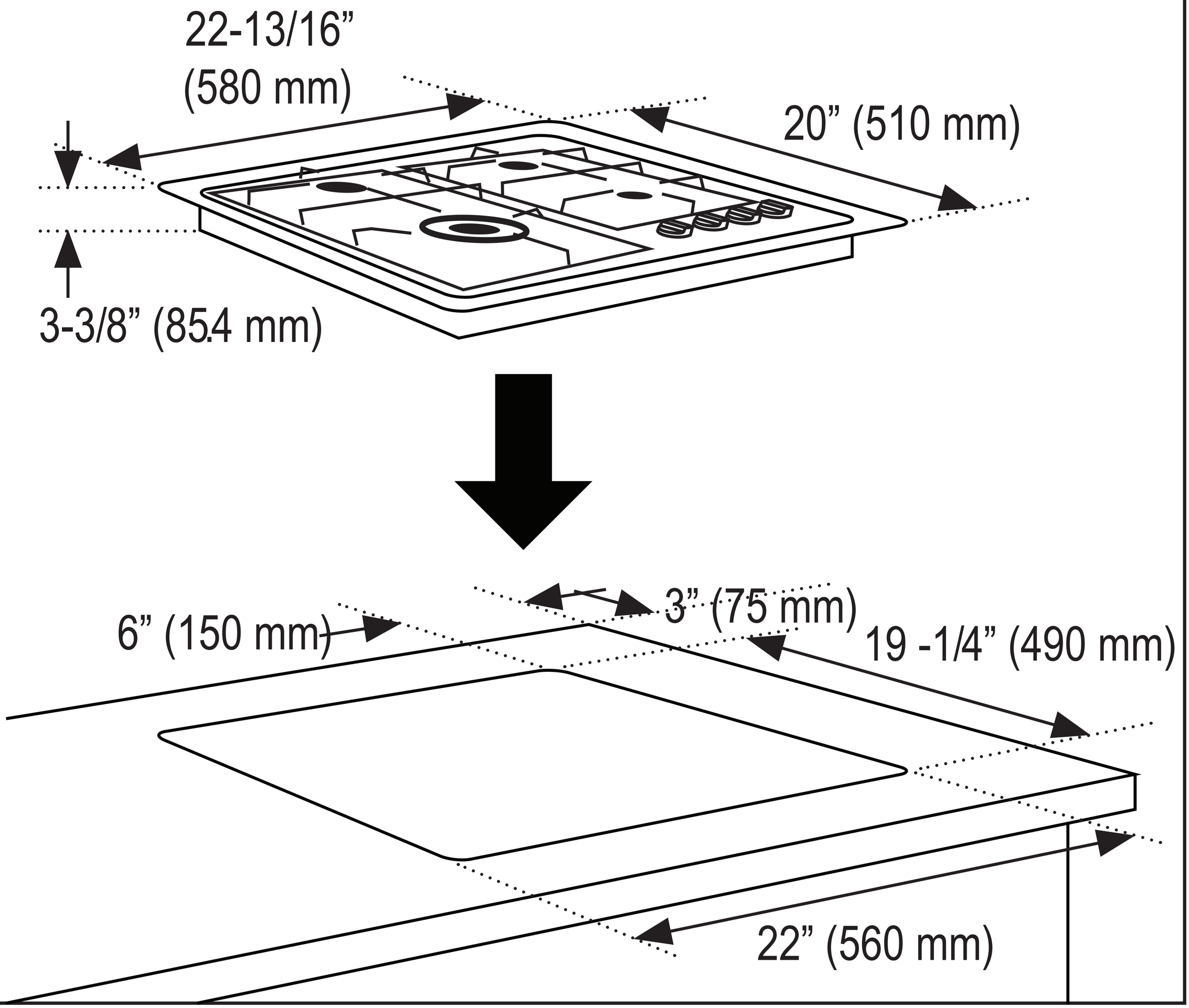
22-13/16”
(580 mm)
20” (510 mm)
3-3/8” (85.4 mm)
6” (150 mm)
3” (75 mm)
19 -1/4” (490 mm)
22” (560 mm)