ROOM RATV.

CEILING FAN WITH LIGHT

info@roomratv.com

Technical Specifications

Model: RV52-BK-3X-Z3
RV52-WE-3X-Z3

Input: AC120V 60Hz

Power: 50W (Fan:35W , Light:15W)

Size: ∅52inch * H10inch

Remote Battery Required:
2 pcs AAA battery(not included)

Service Mailbox: info@roomratv.com

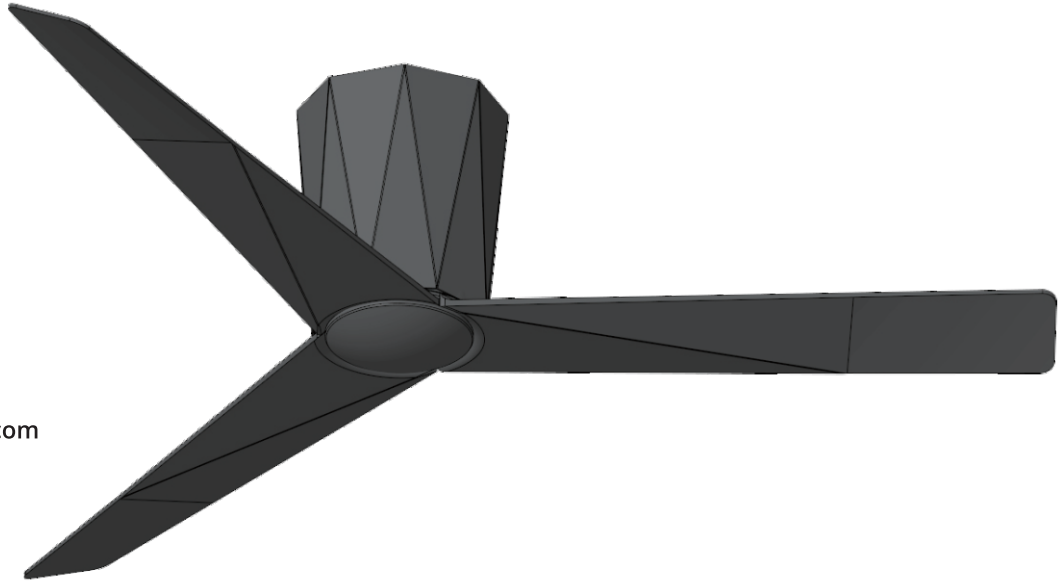

WARNING

Disconnect power prior to installation,inspection,or removal
Do not touch when light is on or when it is hot
If there is any problem with the fixture,turn power off and do not attempt to repair unless you are a qualified technician
Do not expose to water or rain

Packing List

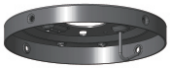

Hanger Bracket

Lamp

Fan Motor Assembly

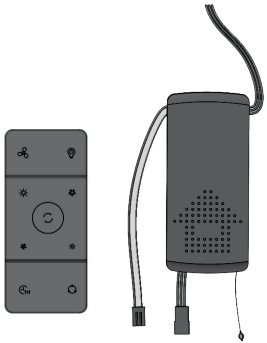

Remote Control

Motor Housing

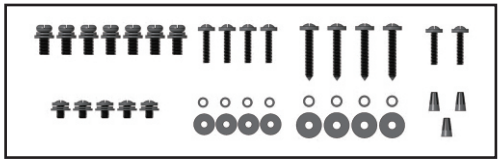

Screw Pack

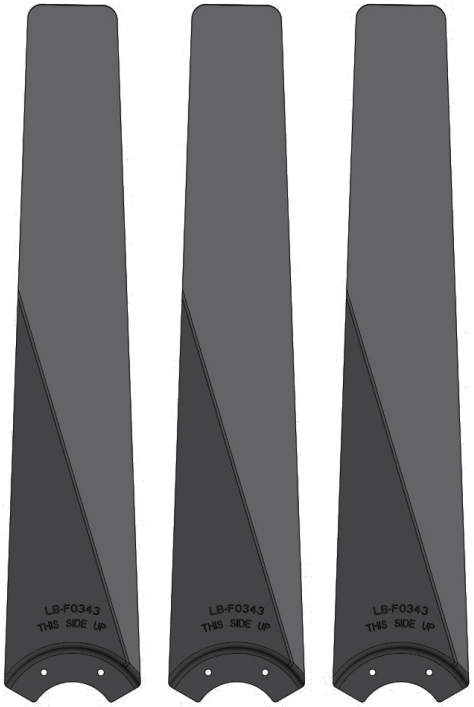

Fan Blade

Installation Guide

1

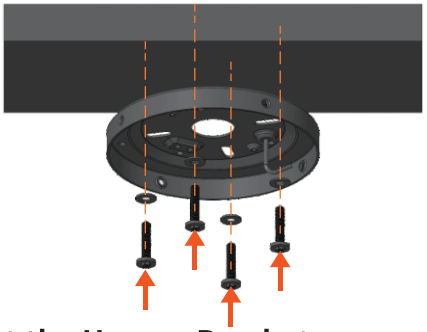

Mount the Hanger Bracket:

Fasten the hanger bracket to the ceiling.

2

Install the Fan Motor Assembly:

Fasten the fan motor assembly to the hanger bracket.

3

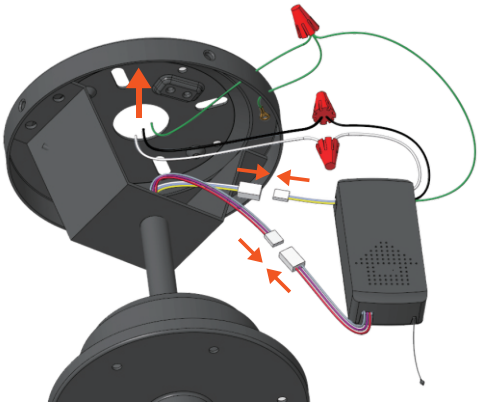

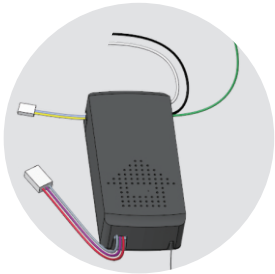

Connecting the Controller:

①Match and connect controller wires to motor wires by color.
②Connect black to L (live) and white to N (neutral) from the ceiling by color.
③Connect all green ground wires (one from the hanger and one from the controller) to the ceiling's ground wire.

4

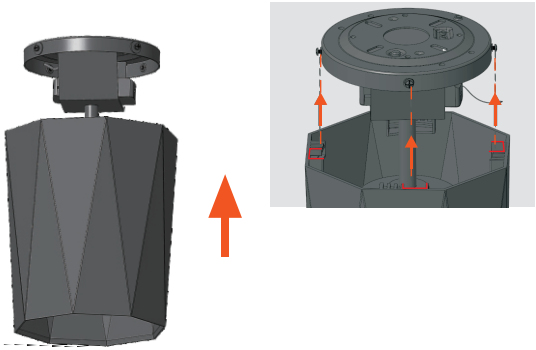

Attach the Motor Housing:

Position the motor cover onto the hanger bracket.

5

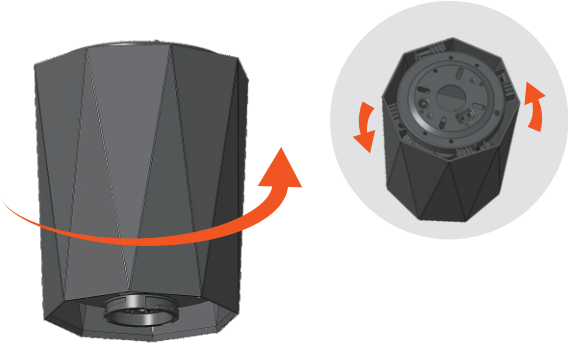

Attach the Motor Housing:

Rotate the motor cover clockwise until it locks into place

6

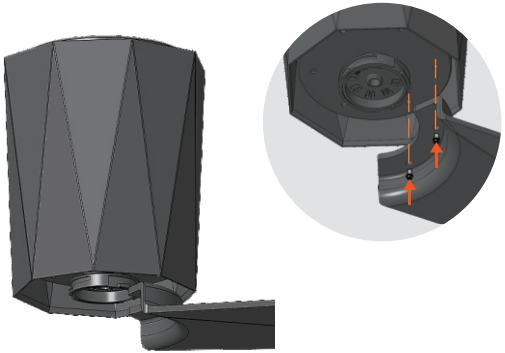

Attach the Fan Blades:

Fasten the fan blades to the screw holes on the bottom of the motor.

7

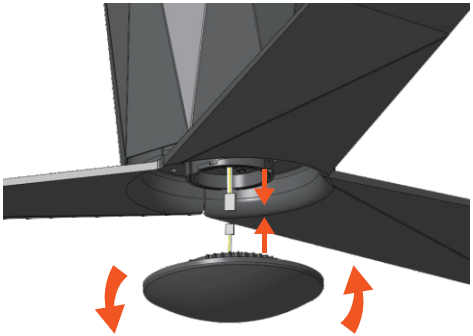

Install the Lamp:

①Connect the lamp wires to the motor wires by color.

②Rotate the lamp clockwise until it locks onto the motor base.

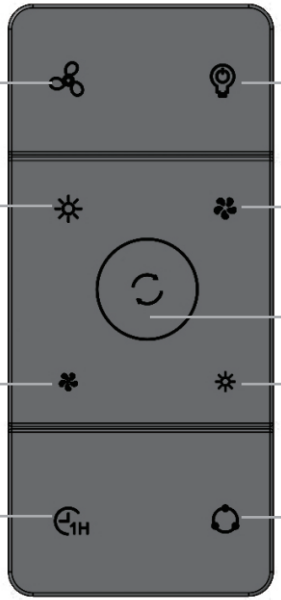

Fan ON/OFF

Light ON/OFF

Light Brightness +

Press: Incrementally increase brightness.
Hold: Continuously adjust brightness.

Fan Speed +

Press to increase fan speed (1-6).
Two beeps at max speed.

Fan Forward/Reverse

Fan Speed -

Press to decrease fan speed (1-6).
Two beeps at minimum speed.

Light Brightness -

Press: Incrementally decrease brightness.
Hold: Continuously adjust brightness.

One Hour Timer

Works for fan and light; any other button cancels; pressing timer again resets.

3 Color Temperature Switching

Press: Switches to Cool White → Warm White → Neutral White.
Hold: Continuous adjustment (cycles through the range).

Memory Function:

All light settings have a memory function. The brightness and color temperature will be remembered if the light remains on for 10 seconds.When turning the fan on via the remote control or wall switch, without cutting power, the previous speed and direction settings will be retained.

Remote Pairing Instructions:

Within 5 seconds of powering on, press and hold the light on/off "💡"button for 3 seconds to pair the remote. The light will flash twice to indicate successful pairing. If pairing fails, wait 30 seconds before trying again.

ROOM RATV.

info@roomratv.com