POWERSMART®

INSTRUCTION MANUAL

EN 21" 3-in-1 GAS PUSH LAWN MOWER

FR 21" 3-in-1 TONDEUSE A GAZON A PROPULSION DE GAZ

ES 21" 3-en-1 CORTADORA DE CÉSPED A GASOLINA

Model # DB2194PH

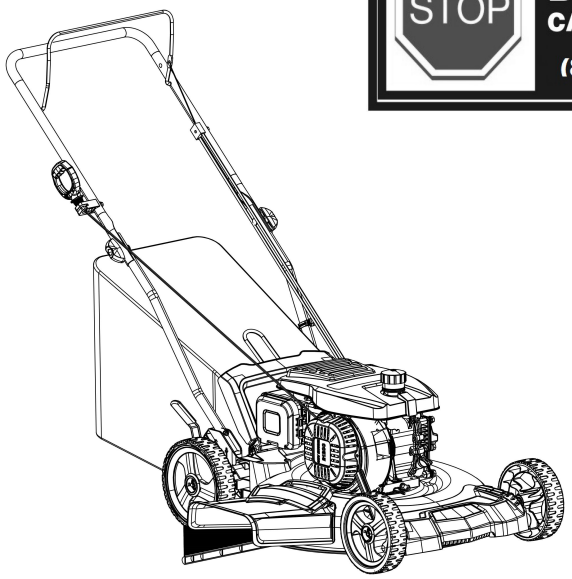

STOP

PROBLEMS? QUESTIONS?

DO NOT RETURN TO STORE

CALL OUR CUSTOMER HELP LINE

(800)791-9458 Mon-Fri 9-5 EST

Have product questions or need technical support? Please feel free to contact us!

Tollfree: 1-800-791-9458 Mon-Fri 9-5 EST

Email: support@amerisuninc.com

CONTENTS

EN

Technical data…..…….. 3
Introduction…… 4
Safety information…….……... 4
General safety procedures ……...…… 5
Important safety instructions……. 6
Warning label instructions…….……8
Knowing your lawn mower…….…… 10
Lawn mower preparation……... 11
Operation……...…… 13
Maintenance……... 16
Storage…… 19
Troubleshooting……. 19
Exploded view & parts list…… 20
Warranty…… 24

TECHNICAL DATA

21" 3-in-1 Gas Push Lawn Mower	Model # DB2194PH
Engine type:	4 Stroke, OHV, single cylinder with forced air-cooling system
Displacement:	209cc
Fuel tank capacity:	0.24 Gallon
Oil capacity:	16.9 fl.oz
Cutting width:	20.5 inch
Cutting height:	1.18 – 3 inch
Height adjustment:	5 Position
Drive type:	Push
Grass catcher capacity:	15.9 Gallon
Wheel:	Front: 7 inch / Rear: 8 inch
Package dimensions (L x W x H):	33.3 x 22.6 x 16.73 inches
Weight:	74.8 lb.

INTRODUCTION

Thank You for Purchasing a PowerSmart® Product. This manual provides information regarding the safe operation and maintenance of this product. Every effort has been made to ensure the accuracy of the information in this manual. PowerSmart® reserves the right to change this product and specifications at any time without prior notice.

Please keep this manual available to all users during the entire life of the lawn mower.



This manual contains special messages to bring attention to potential safety concerns, lawn mower damage as well as helpful operating and servicing information. Please read all the information carefully to avoid injury and machine damage.

QUESTIONS? PROBLEMS?

Please contact our Customer Service Dept. with any questions and/or comments, either by Email: support@amerisuninc.com, or Toll Free at (800) 791-9458. We are available Mon-Fri 9am-5pm EST to help solve any issues that you might encounter.

NOTICE REGARDING EMISSIONS

Engines that are certified to comply with U.S. EPA emission regulations for SORE (Small Off Road Equipment), are certified to operate on regular unleaded gasoline, and may include the following emission control systems: (EM) Engine Modifications and (TWC) Three-Way Catalyst (if so equipped).

SAFETY INFORMATION

Before operating this lawn mower, read and observe all warnings, cautions, and instructions on the lawn mower and in this Owner's Manual.

NOTE: The following safety information is not meant to cover all possible conditions and situations that may occur. Read the entire Owner's Manual for safety and operating instructions. Failure to follow instructions and safety information could result in serious injury or death.

This safety alert symbol is used to identify safety information about hazards that can result in personal injury.



A signal word (DANGER, WARNING, or CAUTION) is used with the alert symbol to indicate the likelihood and the potential severity of injury. In addition, a hazard symbol may be used to represent the type of hazard.

DANGER indicates a hazard, which, if not avoided, will result in death or serious injury.

WARNING indicates a hazard, which, if not avoided, could result in death or serious injury.

CAUTION indicates a hazard, which, if not avoided, might result in minor or moderate injury.

CAUTION when used without the alert symbol, indicates a situation that could result in damage to the engine.

GENERAL SAFETY PROCEDURES

For any questions regarding the hazard and safety notices listed in this manual or on the product, please call (800) 791-9458 Mon-Fri 9-5 EST before using the engine.



DANGER: CARBON MONOXIDE

Using an engine indoors CAN KILL YOU IN MINUTES. Engine exhaust contains carbon monoxide (CO). This is a poison gas you cannot see or smell. If you can smell the engine exhaust, you are breathing CO. But even if you cannot smell the exhaust, you could be breathing CO.

NEVER use an engine inside homes, garages, crawlspaces, or other partly enclosed areas. Deadly levels of carbon monoxide can build up in these areas. Using a fan, or opening windows and/or doors will NOT properly vent CO nor supply adequate fresh air. ONLY use an engine outside and far away from windows, doors, and vents. These openings can pull in engine exhaust.

Even if you use an engine correctly, CO may leak into the home. ALWAYS use a battery-powered or battery-backup CO alarm in the home. If you start to feel sick, dizzy, or weak after the engine has been running, move to fresh air RIGHT AWAY. See a doctor. You may have carbon monoxide poisoning.

WARNING: The exhaust from this product contains chemicals known to the State of California to cause cancer, birth defects, or other reproductive harm.

WARNING: This engine may emit highly flammable and explosive gasoline vapors, which can cause severe burns or even death if ignited. A nearby open flame can lead to explosion even if it isn't directly in contact with gasoline.

- Do not operate near an open flame.
- Do not smoke near the engine.
- Always operate on a firm, level surface.
- Always turn engine off before refueling. Allow engine to cool for at least 2 minutes before removing fuel cap. Loosen cap slowly to relieve pressure in tank.
- Do not overfill fuel tank. Gasoline may expand during operation. Do not fill to the top of the tank. Allow for expansion.
- Always check for spilled fuel before operating.
- Empty fuel tank and carburetor bowl before storing or transporting the engine.

WARNING: This engine produces heat when running. Temperatures near exhaust can exceed 150^0F (65^0 C).

Do not touch hot surfaces. Pay attention to warning labels on the engine identifying hot parts of the machine. Allow engine to cool down after use before touching engine or areas of the engine that become hot during use.

CAUTION: Misuse of this engine can damage it or shorten its life.
Only use engine for its intended purposes.

IMPORTANT SAFETY INSTRUCTIONS

This machine is capable of amputating hands and feet and throwing objects. Failure to observe the following safety instructions could result in serious injury or death.

I.General Operation

1. Read, understand, and follow instructions and warnings in this manual and on the machine, engine and attachments.
2. Only allow operators, who are responsible, trained, familiar with the instructions, and physically capable to operate the machine.
3. Do not carry passengers and keep bystanders away.
4. Do not operate the machine while under the influence of alcohol or drugs.
5. Follow the manufacturer's recommendation for wheel weights or counterweights.

II. PREPARATION BEFORE OPERATING

1. Clear the operating area of any objects which could be thrown by or interfere with operation of the machine
2. Keep the area of operation clear of all bystanders, particularly small children. Stop the machine and attachment(s) if anyone enters the area.
3. Do not operate the machine without the entire grass catcher, discharge chute, or other safety devices in place and functioning properly. Check frequently for signs of wear or deterioration and replace as needed.
4. Wear appropriate personal protective equipment such as safety glasses, hearing protection, and footwear.

III. OPERATING

1. Only operate the engine in well ventilated areas. Exhaust gases contain carbon monoxide, a deadly poison.
2. Only operate the machine in daylight or good artificial light.
3. Avoid holes, ruts, bumps, rocks, or other hidden hazards. Uneven terrain could overturn the machine, or cause operator to lose their balance or footing.
4. Do not put hands or feet near rotating parts or under the machine. Keep clear of the discharge opening at all times.
5. Do not direct discharge material toward anyone. Avoid discharging material against a wall or obstruction. Material may ricochet back toward the operator. Stop the blade(s) when crossing gravel surfaces.
6. Do not leave a running machine unattended. Always park on level ground, disengage the attachment, set parking brake, and stop engine.
7. Do not mow in reverse unless absolutely necessary. Always look down and behind before and while backing.

IV. CHILDREN SPECIFIC

1. Tragic accidents can occur if the operator is not alert to the presence of children. Children are often attracted to the machine and the mowing activity. Never assume that children will remain where you last saw them.
2. Keep children out of the operating area and under the watchful care of a responsible adult other than the operator.

V. SLOPE SPECIFIC

Slopes are a major factor related to accidents. Operation on slopes requires extra caution.

1. Travel in the manufacturer recommended direction on slopes. Use caution while operating near drop offs.
2. Avoid mowing wet grass. (Poor footing could cause a slip and fall accident.)
3. Do not operate machine under any condition where traction, steering, or stability is in question. Tires could slide even if the wheels are stopped.

4. Always keep the machine in gear when going down slopes. Do not coast downhill.
5. Avoid starting and stopping on slopes. Avoid making sudden changes in speed or direction. Make turns slowly and gradually.
6. Use extra care while operating machine with a grass catcher or other attachment(s). They can affect the stability of the machine.

VI. FIRE AND FUEL SPECIFIC

1. Extinguish all cigarettes, cigars, pipes and other sources of ignition.
2. Use only an approved fuel container.
3. Do not remove fuel cap or add fuel with the engine running or while hot.
4. Do not refuel indoors or in enclosed spaces
5. Do not store the machine or fuel container, or refuel, where there is an open flame, spark, or pilot light such as on a water heater or other appliance.
6. If fuel is spilled, do not attempt to start the engine and avoid creating any source of ignition until fuel vapors have dissipated.
7. To help prevent fires: keep machine free of grass, leaves, or other debris build up; clean up oil or fuel spillage and remove any fuel soaked debris; allow machine to cool before storing.
8. Use extra care in handling gasoline and other fuels. They are flammable and vapors are explosive.

VII. HAULING

1. Use full width ramps for loading and unloading a machine for transport.

VIII. SERVICE

1. Keep machine in good working order. Replace worn or damaged parts.
2. Use caution when servicing blades. Wrap the blade(s) or wear gloves. Replace damaged blades. Do not repair or alter blade(s)
3. Machines with hydraulic pumps, hoses, or motors; and/or diesel injection systems:
   WARNING: Fluid escaping under pressure may have sufficient force to penetrate skin and cause serious injury. If fluid is injected into the skin, seek immediate medical attention. Keep body and hands away from pin holes or nozzles that eject fluid under high pressure. If a leak occurs, have the machine immediately serviced by a trained technician.
4. If equipped, disconnect spark plug wire(s) before making any repairs.

WARNING LABLE INSTRUCTIONS

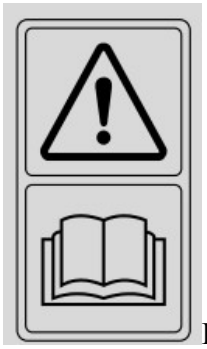

Read carefully the manual before use.



Danger-flying objects;
keep safe distance from the machine as long as the engine is running.

Do not open or remove safety shields while engine is running.

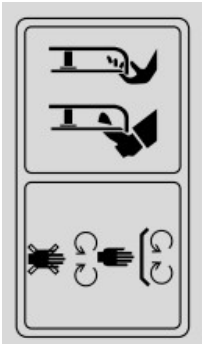

Pay more attention to the operator's hands and feet to avoid injury.

Do not open or remove safety shields while engine is running.



Fuel is flammable,keep fire away.
Never fill up the fuel tank while the engine is running.



Emission of toxic gas, do not use the mower in a close area or not well ventilated.



Look behind while backing

Steep slope hazard

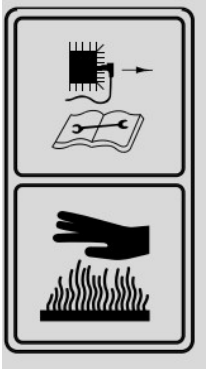

When repairing, please pull off the spark plug boot, then repair it according to the operational manual

Hot surfaces



When mowing,please wear the glasses ad ear plugs to defend the operator himself

Keep bystanders away.



Safety label found on the lawn mower:
KEEP HANDS AND FEET AWAY.

Warning: Keep the safety signs clear and visible on the equipment.Replace the safety signs if they are missing or illegible.

KNOWING YOUR LAWN MOWER

Please use the illustration below to familiarize yourself with the location and function of the components that control of your lawn mower.

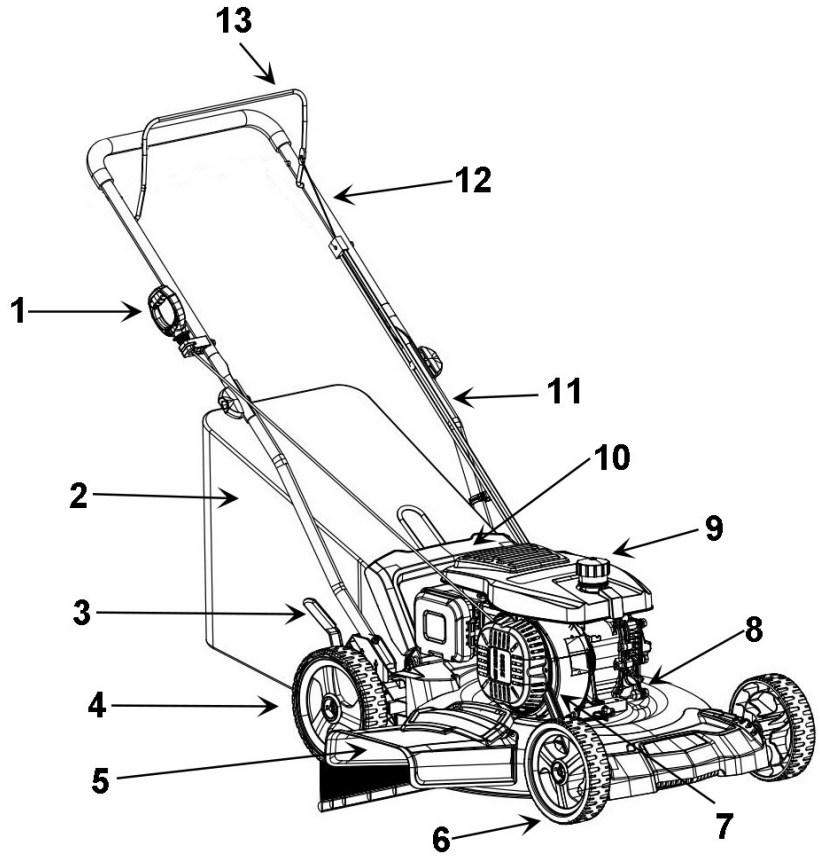

1	Recoil starter handle	8	Oil dipstick
2	Grass catcher	9	Fuel tank cap
3	Cutting height adjustment lever	10	Rear discharge door
4	Rear wheel	11	Lower handle
5	Side discharge chute	12	Upper handle
6	Front wheel	13	Engine start/stop control
7	Cutting height adjustment lever		

LAWN MOWER PREPARATION

The following section describes steps necessary to prepare the lawn mower for use. If after reading this section, you are unsure about how to perform any of the steps please call (800) 791-9458 Mon-Fri 9-5 EST for customer service. Failure to perform these steps properly can damage the lawn mower or shorten its lifespan.

UNPACKING

Tools required (not included): #2PH screwdriver, utility knife.

Unpack the lawn mower and all its parts, and compare against the list below. Do not discard the carton or any packaging until the engine is completely assembled.

PACKING LIST
Side discharge chute*1
Grass Catcher*1
Cable clip*1
Spark plug wrench*1
Flange bolts M6*2
User manual*1
Funnel*1
2/5 inch Sleeve *1
1/2 inch*2/5 inch Wrench *1

ATTACH LOWER & UPPER HANDLE
1. Loosen two knobs and turn the folded upper tube to match the lower tube, and tighten the knob.
2. Turn the lower tube to an angle that matches the base and tighten with two screws. （Two screws are in the accessories bag.）

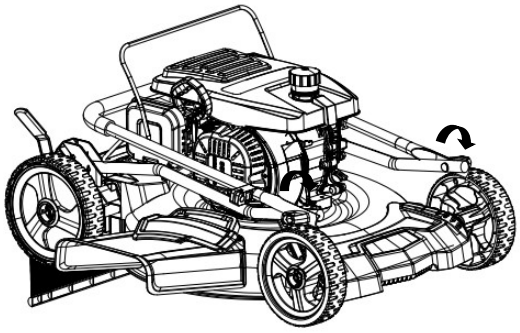

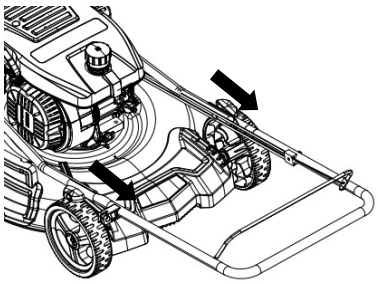

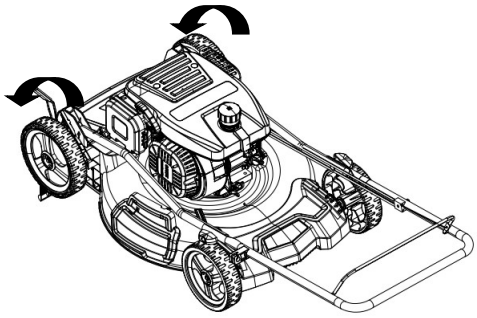

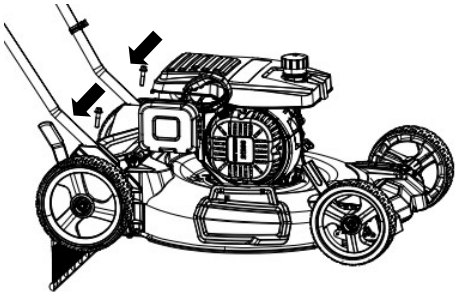

3. Lock the cable to the lower handle using cable clip.

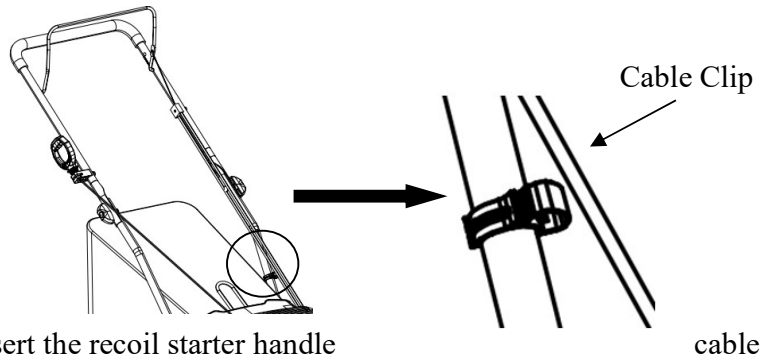

4. Insert the recoil starter handle cable into the hook provided on the upper handle.
You must engage the start/stop control to release the recoil starter handle.

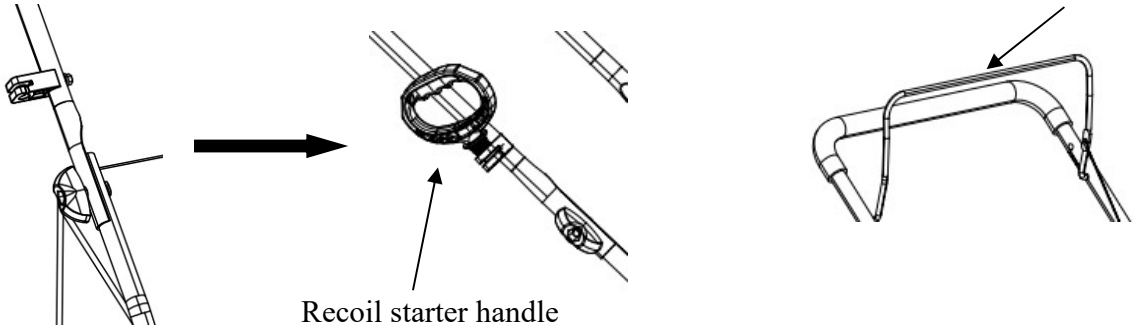

SIDE DISCHARGE CHUTE

To convert mower for side discharge, the grass catcher has been removed and that the rear discharge door is closed.

1. Lift the spring-loaded discharge cover located on the side of the mower.
2. Slide two hooks of the side discharge chute under the hinge pin and lower the spring on the side discharge cover.

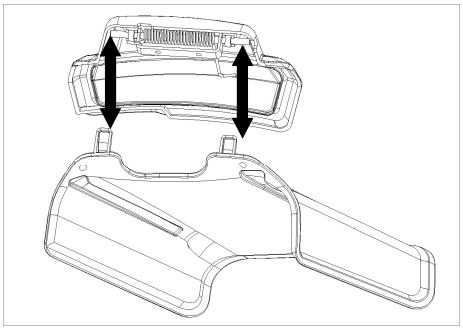

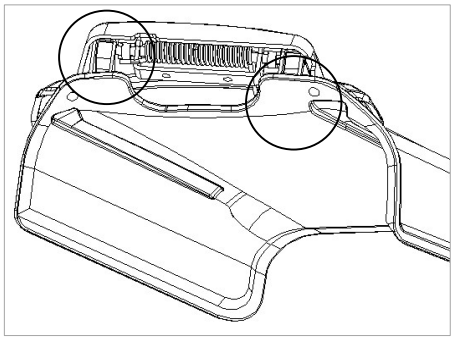

Caution: Do not attempt to remove the permanently mounted spring loaded side discharge cover at any time.

GRASS CATCHER

Attach grass catcher

1. Lift mower rear discharge door.
2. Place grass catcher into the slots in the handle brackets.
3. Release the rear discharge door so that it rests on the grass catcher.

ADJUSTING THE CUTTING HEIGHT

Warning! Cutting height adjustments should only be performed after the engine and blades have come to a complete stop!

It is always best to begin cutting your lawn with a higher deck height to prevent scalping your lawn.

The cutting height is adjusted with front and rear levers.
Actuate the adjustment lever and pull it to the required position. Please make sure that the lever locks into same position.

OPERATION

GAS AND OIL FILL-UP
The engine comes shipped without oil or gasoline. Be sure to add oil and gasoline before starting the engine.

1. Add oil before starting mower for the first time.
2. Service the engine with gasoline as instructed.

Warning: Use extreme care when handling gasoline. Gasoline is extremely flammable and its vapors are explosive. Never fuel the machine indoors or while the engine is hot or running. Extinguish all cigarettes, cigars, pipes and other potential sources of ignition.

Engine Oil
Engine oil is a key factor in deciding the engines performance. Do not apply engine oil with additives or 2-stroke gasoline engine oil, because they haven't enough lubrication, and may shorten the engines service life.

Check the engine with it stopped on a level ground.
Engine oil recommended: 10W-30

As viscosity varies with regions and temperatures, SF class oil is recommended.

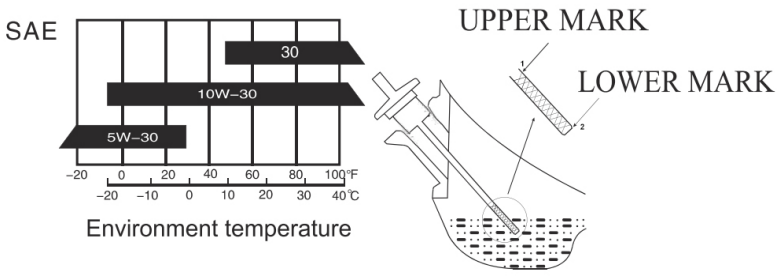

Check method
1. Remove the dipstick and Clean it.
2. Reinsert the dipstick into the oil filling hole, and insert it to the end.
3. Check the oil level: If the oil level is too low, add the recommended engine oil and make sure the oil level between upper level(1) and lower level(2).
4. Re-install the dipstick.

Adding Gasoline

Remove the fuel tank cap and check fuel level.
If the level is too low, refuel the tank, remember adding fuel not over the fuel upper level.

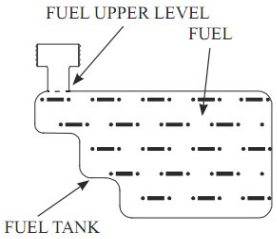

Warning:

1. Gasoline is extremely flammable and is explosive under certain conditions.
2. Refueling in a well-ventilation area with the engine stopped. Do not smoke and allow flames or sparks in the area where gasoline is stored or where the fuel tank is refueled.
3. Do not overfill the fuel tank (there should be no fuel in the filling neck). After refueling, make sure the fuel tank cap is set back securely.
4. Be careful not to spill fuel when refueling. Spilled fuel or fuel vapor may ignite. If any fuel is spilled, make sure the area is dry before starting the engine.
5. Avoid repeated or prolonged contact with skin or breathing of fuel vapor. Keep out of reach of children.

Use fresh (within 30 days from purchase), lead-free gasoline with a minimum of 87 octane rating. Do not mix oil with gasoline.
To add gasoline, follow these steps:
1. Make sure the lawn mower is on a level surface.
2. Unscrew fuel tank cap and set aside. NOTE: The fuel cap may be tight and hard to unscrew.
3. Slowly add unleaded gasoline to the fuel tank. Be careful not to overfill. The capacity of the fuel tank is 0.24gallons.

NOTE: Do not fill the fuel tank to the very top. Gasoline will expand and spill over during use even with the fuel cap in place.

4. Reinstall fuel cap and wipe clean any spilled gasoline with a dry cloth.

IMPORTANT:

- Never use an oil/gasoline mixture.
- Never use old gasoline.
- Avoid getting dirt or water into the fuel tank.
- Gasoline can age in the tank and make starting difficult. Never store lawn mower for extended periods of time with fuel in the tank or the carburetor.

ENGINE START/STOP CONTROL

This lawn mower comes equipped with an engine start/stop control to prevent unintentional starting and to ensure safe operation. Releasing this lever will quickly stop the blade in case of danger. The lever must be actuated before the lawn mower is started. When the engine start/stop lever is released, it must return to its initial position.

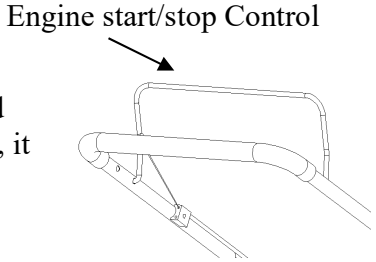

Before you start mowing, you should run through this process several times in order to ensure that the lever and actuator cables are working properly. Repeat the test several times after the engine has started up. When the engine start/stop Control is released, the engine must stop within a few seconds. If not, contact Customer Service.



Warning: The blade begins to rotate as soon as the engine is started.

START THE ENGINE

To start the engine, perform the following steps:
1. Check the oil and fuel levels.
2. Press the primer bulb 3 times.
3. Engage the engine Start/Stop Control and simultaneously pull on the recoil starter. Pull on the recoil starter handle slowly until a slight resistance is felt, then pull quickly to start the engine.
Return cord gently into the recoil starter. Never allow the cord to snap back.
4. If engine fails to start, repeat step 3.

NOTE: After repeated failed attempts to start the engine, please consult the troubleshooting guide before attempting again. If problems persist, please call customer service.
NOTE: **D**on't allow the starter grip to snap back against the engine. Return it gently to prevent damage to the starter.

STOP THE ENGINE

Release the engine start/stop control to stop the engine.

MOWING

The engine throttle on your mower has been preset to provide optimum bagging and mulching performance for years to come.

Only use a sharp blade that is in good condition. This will prevent the grass blades from becoming frayed and the lawn from turning yellow.
Mow in straight lines for a nice, clean look. The swaths should overlap each other by a few inches in order to avoid stripes.

It's important to keep the underside of the mower deck clean and remove grass build-up. This buildup will decrease mulching quality, and make it harder for the equipment to bag the grass.

Always mow along inclines (not up and down). You can prevent the lawn mower from slipping down by holding a position at an angle upwards. Select the cutting height according to the length of the grass. If necessary, mow a number of times so that you never cut more than 2 inches of grass in one go.

Turn off the engine before doing any checks on the blade. Keep in mind that the blade continues to rotate for a few seconds after the engine has been turned off. Never attempt to manually stop the blade. Regularly check to see if the blade is securely attached, is in good condition and is sharp. If the contrary is the case, sharpen the blade or replace it. In the event that the blade strikes an object, immediately turn off the lawn mower and wait for the blade to come to a complete stop. Then inspect the condition of the blade and the blade mount. Replace any parts that are damaged.

USING AS SIDE DISCHARGE

You should close the rear cover with mulching adapter in order to use the side discharge.
1. On the side of the mower, lift the side discharge cover.
2. Slide two hooks of side discharge chute under hinge pin on the side discharge cover. Lower the side discharge cover.

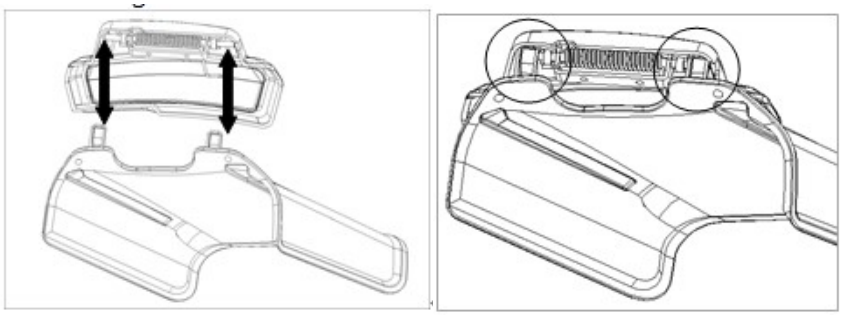

Caution: Do not remove side discharge cover at any time.

USING AS A REAR BAGGER

To use the grass catcher to collect clippings while you are operating the mower.

1. Attached grass catcher following instruction in the lawn mower preparation. Grass clippings will automatically collect in bag as you run the mower. Operate mower until grass catcher is full.
2. Stop engine completely by releasing the engine start/stop lever. Make sure that the engine has come to a complete stop.
3. Lift rear discharge door and pull grass catcher up and away from the mower to remove the grass catcher. Dispose of the grass clippings and reinstall the grass catcher when complete.

Warning: If you strike a foreign object, stop the engine. Remove spark plug wire, thoroughly inspect mower for any damage, and repair damage before restarting and operating. Excessive vibration of the mower during operation is an indication of damage. The mower should be promptly inspected and repaired.

MAINTENANCE

Proper routine maintenance of this mower will help prolong the life of the machine.
Always observe safety rules when performing any maintenance.
The warranty on this lawn mower does not cover items that have been subjected to operator abuse or negligence.
To receive full valve from warranty, operator must maintain the lawn mower as instructed here.
Changing of engine-governed speed will void engine warranty.
All adjustments should be checked at least once each season.
Periodically check all fasteners and make sure these are tight.

Warning: Always stop engine, allow engine to cool, disconnect spark plug wire before performing any type of maintenance on your machine.

DECK CARE

It is important to clean underside of the mower deck after use to prevent the build-up of grass clippings or other debris. Follow steps below for proper cleaning.

1. Allow the engine to run until it is out of fuel. Do not attempt to pour fuel from the engine.
2. Disconnect spark plug wire.
3. Slowly tip mower so that it rests on the housing.
4. To prevent oil spills, always tip the mower so that the Air Filter is facing up.
5. Hold mower firmly and scrape and clean the underside of the deck with a suitable tool.
6. Gently lower the mower back on its wheels on the ground.

Warning: Never tip the mower more than 90° in any direction and do not leave the mower tipped for any length of time. Oil can drain into the upper part of the engine causing a starting problem.

MOWER BLADE

To ensure safe operation, have all blade sharpening, balancing and mounting work carried out by an authorized service center. To achieve optimal results, we recommend having the blade checked once a year.

If, in spite of all caution, the blade comes into contact with an obstacle, switch off the engine immediately and pull off the spark plug connector. Tilt the lawn mower to the rear and check the blade for damage. Always keep the side with the air cleaner facing up. Damaged or bent blades must be replaced. Never straighten a bent blade. Never work with bent or heavily worn blades as this will result in vibrations, causing further damage to the mower.



Warning: Risk of injury when working with a damaged blade.

CHECKING THE OIL

The oil capacity of the engine crankcase is 16.9 fl. oz.
Check the oil level of the engine according to the Recommended Maintenance Schedule.
The lawn mower should be checked before each use for proper oil level. This is a critical step for proper engine starting.

To check the oil level:

1. Remove the dipstick and clean it.
2. Reinsert the dipstick into the Oil filling hole without screwing it and check Oil lever.
3. If the Oil lever is too low, add the recommended engine oil up to the oil upper lever.
4. Reinstall oil dipstick.

CHANGING/ADDING OIL

Change the oil according to the Recommended Maintenance Schedule. Change the oil when the engine is warm. This will allow for complete drainage. Change oil more often if operating under heavy load or high ambient temperatures. It is also necessary to drain the oil from the crankcase if it has become contaminated with water or dirt. The oil capacity of the engine is 16.9 fl.oz. Add oil when the oil level is low. For proper type and weight of oil refer to “GAS AND OIL FILL-UP” portion of the “OPERATION” section.

To refill the crankcase with oil, follow these steps:

1. Make sure the lawn mower is on a level surface. Tilting the lawn mower to assist in filling will cause oil to flow into engine areas and will cause damage. Keep lawn mower level!
2. Remove the dipstick from the engine.
3. Using a funnel or appropriate dispenser, add the correct amount of oil (16.9 fl.oz) into the crankcase.
4. Reinstall dipstick.

NOTE: Never dispose of used motor oil in the trash or down a drain. Please call a local recycling center or auto garage to arrange oil disposal.

AIR CLEANER MAINTENANCE

Routine maintenance of the air cleaner helps maintain proper airflow to the carburetor. Occasionally check that the air cleaner is free of excessive dirt. Refer to Recommended Maintenance Schedule. For air cleaner detail:

1. Open the air cleaner cover.
2. Remove the sponge-like element from the casing.
3. Wipe the dirt from inside the empty air cleaner casing.
4. Wash the sponge-like element in household detergent and warm water. Small amount of oil in the element is normal and necessary for the engine to work properly.

5. If necessary, replace the paper element.
6. Reinstall the sponge-like element in the air cleaner casing and reinstall the cover.

CAUTION: running the engine with dirty, damaged or missing air cleaner element will cause the engine to wear out prematurely.

SPARK PLUG MAINTENANCE

The spark plug is important for proper engine operation. A good spark plug should be intact, free of deposits, and properly gaped. Refer to Recommended Maintenance Schedule. To inspect the spark plug:

1. Remove spark plug boot. Be careful not to tear insulation or wire.
2. Unscrew the spark plug from the engine using the spark plug wrench provided. There is limited space for the wrench to turn. Use both rows of holes in the spark plug wrench to gain leverage to loosen the plug.
3. Visually inspect the spark plug for cracks or excessive electrode wear. Replace as necessary.
4. Measure the plug gap with a wire gauge. The gap should be 0.7 to 0.8 mm (0.028-0.031 in).
5. If re-using the spark plug, use a wire brush to clean any dirt from around the spark plug base then re-gap the spark plug.
6. Screw the spark plug back into the spark plug hole using the spark plug wrench. Do not over-tighten spark plug. Recommended tightening of spark plug is ½ to ¾ of a turn after spark plug gasket contacts spark plug hole. Reinstall the spark plug boot.

MAINTENANCE SCHEDULE

Item	Action	Before each use	5 Hours of use or first month	First 25 hours of use	50 hours of use or every 6 months	100 hours of use or every year	150 hours of use or every two years
Blade	Inspect	x					
Blade mounting bolt	Inspect	x					
Engine oil	Check	x					
	Change		x		x[2]	x	x
Air filter	Check	x					
	Clean			x[1]	x[1]	x[1]	
	Replace						x
Grass bag	Check	x					
Blade control operation	Check	x				x	
Spark plug	Check					x	
	Replace						x
Fuel tank	Clean					x	
Flywheel brake pad	Check					x	
Valve clearance	Check-adjust					x	
Fuel line	Check	Check every 2 years and replace if necessary					

1. Service more frequently when used in dusty areas.

2.Change engine oil every 25 hours when used under heavy load or in high outside air temperatures.

STORAGE

CAUTION: Never place any type of storage cover or tarp on the MOWER while it is still hot.

If the MOWER is being stored for extended periods of time (30 days or more), drain fuel tank and carburetor bowl.

When storing the mower for extended periods of time:
1. Start the engine and run it until the tank, carburetor bowl and fuel line are completely empty and the engine stalls.
2. Change the oil after each season.
3. Remove the spark plug. Use an oil-can to fill the cylinder with approx. 2 ml of oil. Slowly pull back the starter handle, which will bathe the cylinder wall with oil. Screw the spark plug back in.
4. Clean the cooling fins of the cylinder and the housing.
5. Be sure to clean the entire equipment to protect the paint.
6. Store the equipment in a well-ventilated place.

NOTE: LIMITED WARRANTY does not cover fuel system damage or engine performance problems resulting from neglected storage preparation.

TROUBLESHOOTING

Problem	Cause	Solution
Engine fails to start	Engine start/stop lever disengaged.	Engage engine start/stop lever.
	Spark plug wire disconnected.	Connect spark plug wire.
	Fuel tank empty or stale fuel.	Fill tank with clean, fresh gasoline.
	Engine not primed.	Press primer bulb.
	Faulty spark plug.	Clean, adjust gap, or replace.
	Blocked fuel line.	Clean fuel line.
	Engine flooded.	Wait a few minutes to restart, do not prime.
Engine runs erratic.	Spark plug wire loose.	Connect and tighten spark plug wire.
	Blocked fuel line or stale fuel.	Clean fuel line. Fill tank with clean, fresh gasoline. Drain carburetor bowl.
	Water or dirt in fuel system.	Drain fuel tank. Refill with fresh fuel.
	Dirty air filter	Clean or replace the filter.
Engine overheats.	Engine oil level low.	Fill crankcase with proper oil.
	Air flow restricted.	Clean area around and on top of engine.
Idles poorly.	Spark plug fouled, faulty, or gap too wide.	Reset gap or replace spark plug.
	Dirty air cleaner.	Clean or replace the filter.
Excessive vibration/noise	Blade loose or unbalanced.	Tighten and balance blade.
	Bent/damaged blade.	Replace the blade.
Mower will not mulch grass.	Wet grass.	Do not mow when grass is wet, wait until dry to cut.
Uneven cut.	Excessively high grass.	Mow once at a high cutting height, then mow again at desired height or make a narrower cutting path.
	Dull blade.	Sharpen or replace blade.

EXPLODED VIEW AND PARTS LIST

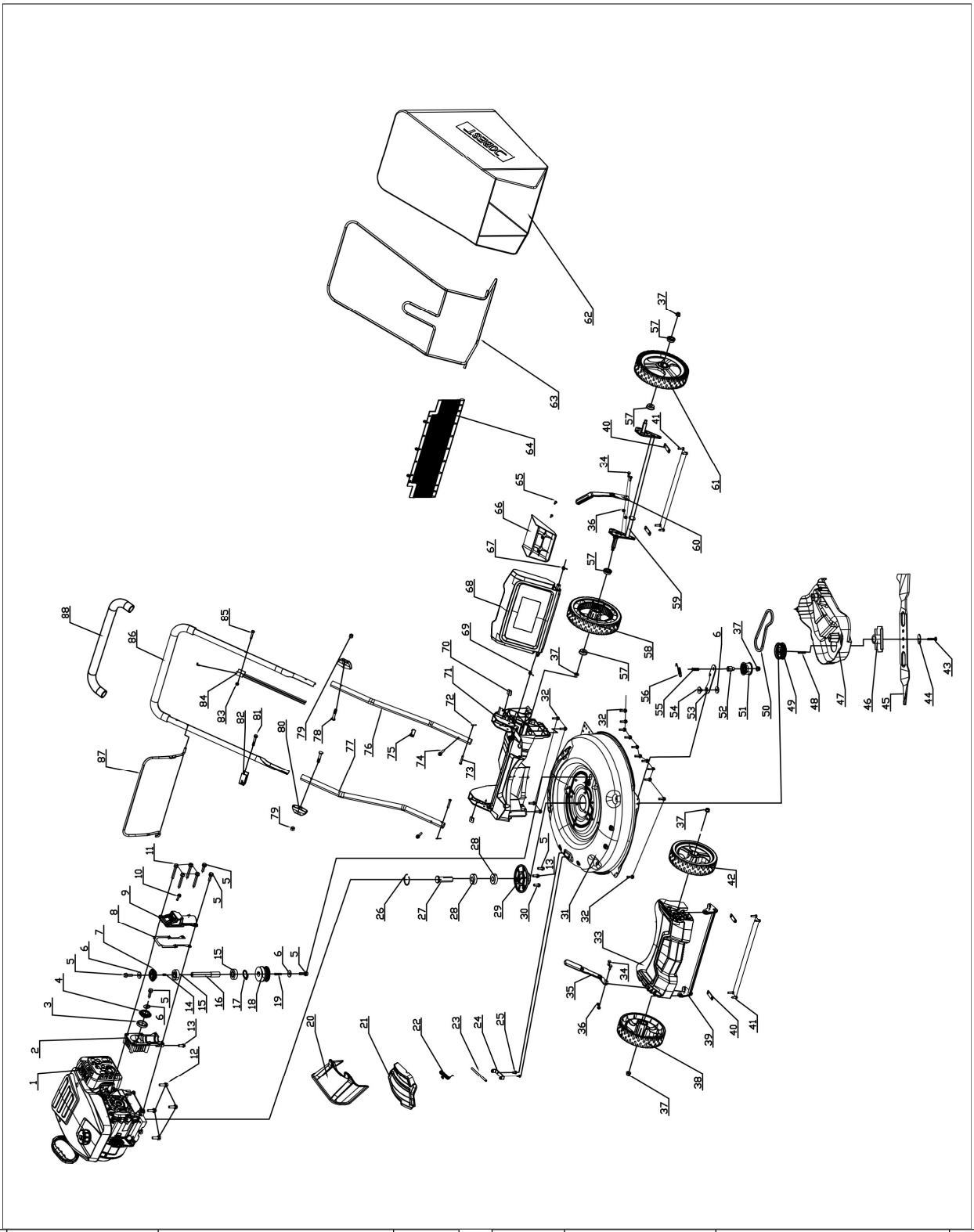

Item	Stock #	Description	Qty
1	9999960902	Engine	1
2	303090094	Gear box seat	1
3	303100100	Bearing	1

Item	Stock #	Description	Qty
45	303071037	21 inch Blade	1
46	303181407	Blade connector	1
47	203052967	Belt cover	1

4	303160961	Left hand bevel gear	1
5	303020240	Bolt	6
6	303042005	Flat washer	4
7	303160962	Right bevel gear	1
8	303071551	Paper pad	1
9	303090095	Gear box cover	1
10	303020142	Bolt M8*10	1
11	303160791	Bolt M8*60	4
12	303020649	Bolt M8×20	4
13	303020506	Bolt M8*12mm	2
14	303110045	Flat key	1
15	303100045	Deep groove ball bearing	2
16	303100101	Long axis	1
17	303050066	Shaft ring	1
18	303160963	Two-groove belt pulley	1
19	303110047	Flat key	1
20	203050382A	Side discharge chute	1
21	203050381B	Side discharge deflector	1
22	303130379	Torsional spring	1
23	303090066A	Torsional spring pin	1
24	303160833	Side discharge bracket	1
25	303020468	Screw M6x10mm	2
26	303050067	Retaining ring	1
27	303100102	Short axis	1
28	303100103	Deep groove ball bearing	2
29	303071552	Bearing seat	1
30	303020672	Bolt M8*10	1
31	303181414	Steel deck	1
32	303010378	Self-tapping screw	15
33	203050399C	Front cover	1
34	303020339	Bolt M6*14mm	4
35	303071058	Front adjustment spring leaf assembly	1
36	303030032	Nylon locknut M6	4
37	303030077	Flange nylon nut M8	5
38	203050648	7 inch Right wheel	1
39	303181410	Front axle welding	1
40	303071420	Axle keeper	4
41	303010216	Self-tapping screw	8
42	203050649	7 inch Left wheel	1
43	303020626	Blade Bolt	1
44	303043023A	Butterfly washer	1

48	303110049	Square Key	1
49	303060169	Multi wedge pulley	1
50	302040092	Multi wedge belt	1
51	203100004	Tensioning pulley assembly	1
52	303160195A	Small tensioning sleeve	1
53	303181406	Small tensioning plate	1
54	303160192B	Small tensioning plate spacer	1
55	303020154	Bolt M8*40	1
56	303130383	Tension spring	1
57	303100065	Stamping bearings	4
58	203050397A	8 inch Right wheel	1
59	303181417	Rear axle welded	1
60	303071059	Rear adjustment spring leaf	1
61	203050398A	8 inch Left wheel	1
62	302120079	Grass collector	1
63	303080491A	Collector holder	1
64	302080050B	Rubber sheet	1
65	303010095	Screw ST4.2*14	2
66	203050389	Rear block cover	1
67	303130381	Rear cover torsional spring left	1
68	203050390B	Rear cover	1
69	303130380	Rear cover torsional Spring right	1
70	303030140A	Rear seat square nut	2
71	203050400C	Rear seat	1
72	303121005	Cotter pin	2
73	303160807	Axis pin	2
74	303020558	Screw M6*35	2
75	203050519	Wire clip	1
76	303081331	Lower handle L	1
77	303081333	Lower handle R	1
78	303020057	T bolt	2
79	303030026	Nut M8	2
80	203020336A	Knob	2
81	303010374	Screw ST6.3*35mm	1
82	203050661	Engine pull rope fixing seat	1
83	303030025	Cap nut	1
84	303200150	Cable	1
85	303020308	Bolt M6*30	1
86	303081329	Upper handle	1
87	303080490	Cutting control bar	1

ENGINE EXPLODE VIEW AND PART LIST

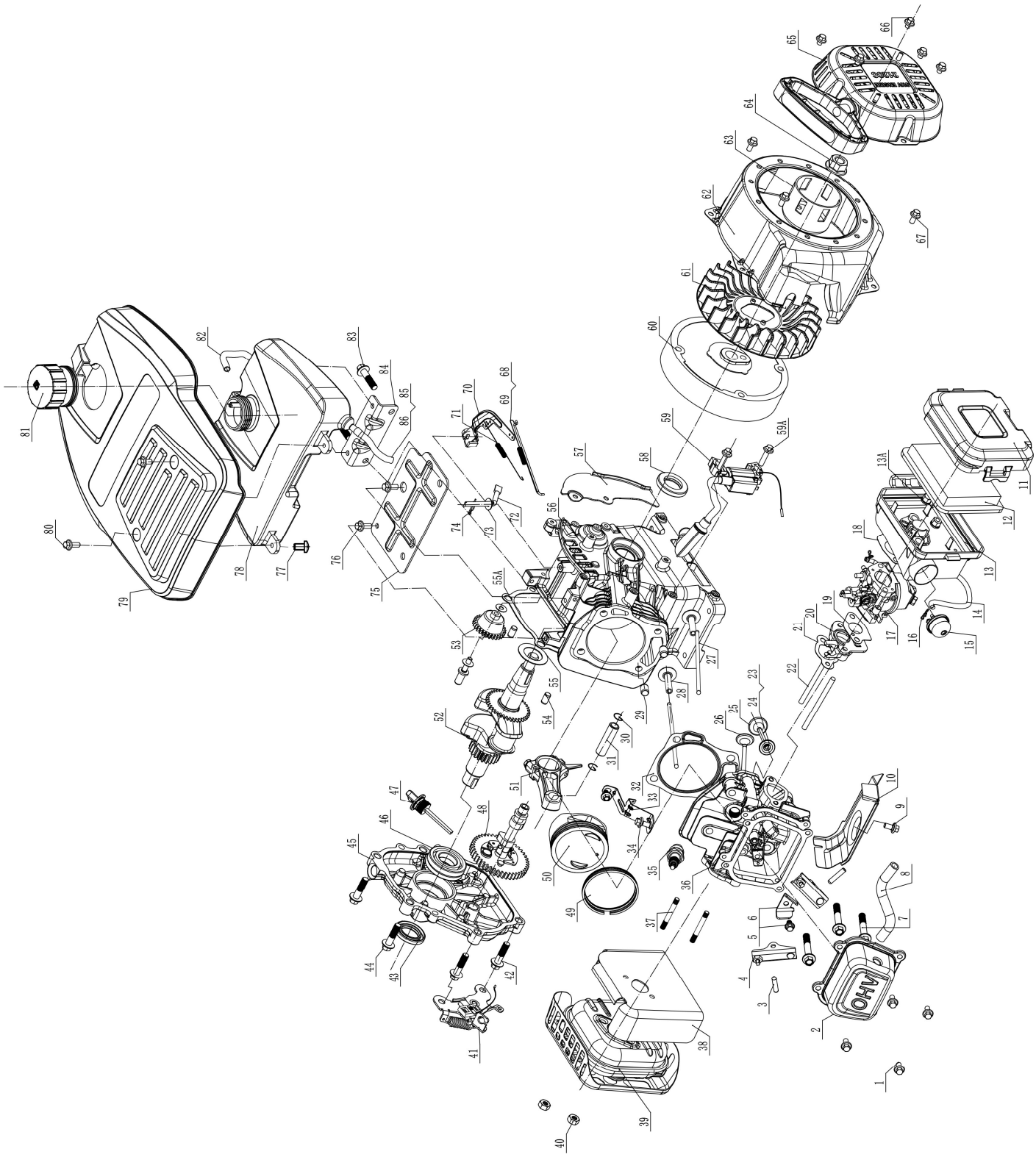

Item	Stock#	Description	Qty
1	303020444	Bolt M6X12	4
2	9020960902	Cylinder head assembly	1

Item	Stock#	Description	Qty
44	303020608	Bolt	2
45	9563960902	CRANKCASE COVER, LEFT	1

3	9142960901	Rocker arm shaft	2
4	9230960902	ROCKER ARM	2
5	303020444	Bolt M6X12	1
6	9142960902	Rocker shaft baffle	2
7	303020620	Bolt M8x60	4
8	9051960902	Muffler tail pipe	2
9	303020444	Bolt M6X12	1
10	9221960902	COVER	1
11	9170960902	AIR FILTER cover	1
12	9529960905	Air filter element	1
13	9170960901	Air filter seat	1
13A	303030112	Self-locking nut M6	2
14	9051960905	Thickening bubble tube	1
15	9532960901	Primer	1
16	9533960202	Oil pipe clamp	2
17	9568960901	Carburetor assembly	1
18	9245960102	Air filter gasket	2
19	9245960108	Carburetor and heat shield gasket	1
20	9535960901	Thermal baffle	1
21	9245960907	Cylinder head with heat shield gasket	2
22	303010394	Carburetor studs	2
23	9142960903	VALVE SPRING seat	2
24	9402960901	VALVE COTTER	2
25	9113960901	INTAKE VAVLE	1
26	9113960902	EXHAUST VAVLE	1
27	9013960901	PUSH ROD	2
28	9536960501	TAPPET	2
29	9140960102	DOWEL PIN	2
30	9146960901	CIRCLIP, PISTON PIN	2
31	9140960901	PISTON PIN	1
32	9245960904	GASKET,CYLINDER HEAD	1
33	9228960901	Governor seat fixing plate	1
34	303020444	Bolt M6X12	2
35	9566960301	Spark plug	1
36	9020960901	Cylinder head assembly	1
37	303010394	Carburetor studs	2
38	9245960905	Muffler gasket	1
39	9569960901	Muffler assembly	1
40	303030112	Self-locking nut M6	2
41	9440960902	Flameout switch combination	1
42	303020583	Bolt	2
43	9246960901	Oil seal	1

46	303100072	6205 bearing	1
47	9198960101	Oil filler gauge	1
48	9158960901	CAM SHAFT	1
49	9564960901	Piston ring assembly	1
50	9129960901	Piston	1
51	9015960901	Connecting rod assembly	1
52	9122960901	Crankshaft assy	1
53	9438960901	Speed regulating gear combination	1
54	9140960103	Locating pin φ8×14	2
55	303043088	Flat gasket	1
55A	9245960906	Box gasket	1
56	9563960901	Crankshaft box body	1
57	9221960901	LOWER SHIELD	1
58	9246960902	Oil seal	1
59	9565960901	Catalytic igniter assembly	1
59A	303020490	Bolt	2
60	9152960901	FLY WHEEL	1
61	9414960101	COOLING FAN	1
62	9226960901	COOLING FAN COVER	1
63	9194960501	Clutch Drum	1
64	303020511	Self-locking nut	1
65	9528960901	STARTER ASSY	1
66	303020671	Bolt	4
67	303020444	Bolt M6X12	4
68	9013960902	THROTTLE LINKAGE	1
69	9332960902	IDLE SPRING	1
70	9230960101	Plunger arm	1
71	9332960901	Speed regulating spring	1
72	9005960501	Throttle handle	1
73	303043041	Flat gasket	1
74	9534960101	Cotter	1
75	9226960913	Housing support	1
76	303020444	Bolt M6X12	2
77	303010108	Screw	3
78	9529960903	TANK ASSY FUEL	1
79	9225960902	Gasoline engine housing	1
80	303020246	Bolt M6x16	2
81	9529960906	Fuel tank cap assembly	1
82	9051960906	Breather pipe	1
83	303020246	Bolt M6x16	2
84	9226960912	Fuel tank bracket	1
85	9051960901	Oil tube	1
86	9115960901	Fuel filter strainer	1

THREE (3) YEARS LIMITED WARRANTY

PowerSmart is committed to building equipment that will provide years of dependable service. Our warranties are consistent with our commitment and dedication to quality.

THREE (3) YEARS LIMITED WARRANTY OF POWER SMART PRODUCTS FOR HOME USE.

PowerSmart (“Seller") warrants to the original purchaser only, that all PowerSmart consumer power tools will be free from defects in material or workmanship for a period of three (3) years from date of purchase. If the tool(s) is used while providing professional or commercial services, the warranty coverage shall be for a maximum of (90) days.

SELLER’S SOLE OBLIGATION AND YOUR EXCLUSIVE REMEDY under this Three (3) Years Limited Warranty and, to the extent permitted by law, any warranty or condition implied by law, shall be the repair or replacement of parts, without charge, which are defective in material or workmanship and which have not been misused, carelessly handled, or improperly repaired, by person(s) other than an Authorized Seller or Service Center.

Please be aware that normal wear parts are not covered this warranty. This includes drive belts, blades and grass bags. Carburetor issues, and/or other damage found to be the result of stale, contaminated or compromised fuel, is not covered under this limited warranty.

To make a claim under this Limited Warranty, you must return the entire power tool product; transportation prepaid, to PowerSmart. The owner must include a legible copy of the original receipt, which shall list the date of purchase, along with the company’s name where the product was purchased.

THIS LIMITED WARRANTY DOES NOT APPLY TO ANY ACCESSORY ITEMS INCLUDED WITH THE TOOL SUCH AS CIRCULAR SAW BLADES OTHER RELATED ITEMS OR TO ANY REPLACEMENT PARTS LISTED UNDER MAINTENANCE.

ANY IMPLIED WARRANTIES SHALL BE LIMITED IN DURATION TO THREE (3) YEARS FROM DATE OF PURCHASE. SOME STATES IN THE U.S. AND SOME CANADIAN PROVINCES DO NOT ALLOW LIMITATIONS ON HOW LONG AN IMPLIED WARRANTY LASTS, SO THE ABOVE LIMITATION MAY NOT APPLY TO YOU.

IN NO EVENT SHALL SELLER BE LIABLE FOR ANY INCIDENTAL OR CONSEQUENTIAL DAMAGES (INCLUDING BUT NOT LIMITED TO LIABILITY FOR LOSS OF PROFITS) ARISING FROM THE SALE OR USE OF THIS PRODUCT. SOME STATES IN THE U.S. AND SOME CANADIAN PROVINCES DO NOT ALLOW THE EXCLUSION OR LIMITATION OF INCIDENTAL OR CONSEQUENTIAL DAMAGES, SO THE ABOVE LIMITATION OR EXCLUSION MAY NOT APPLY TO YOU.

THIS LIMITED WARRANTY GIVES YOU SPECIFIC LEGAL RIGHTS, AND YOU MAY ALSO HAVE OTHER RIGHTS WHICH VARY FROM STATE TO STATE IN THE U.S., PROVINCE TO PROVINCE IN CANADA AND FROM COUNTRY TO COUNTRY.

Please call toll free at: 1-800-791-9458(M-F 9am – 5pm EST) Email: support@amerisuninc.com

PLEASE SAVE ALL OF YOUR ORIGINAL RECEIPTS. THIS WARRANTY IS VOID WITHOUT THEM.