BUNN®

C, CS, CT, CWTF, CRT, CRTF Series

Including

DV, MV, APS/TC/TS, Single CW & Twins

Supercedes Service Manual: 41711.0000

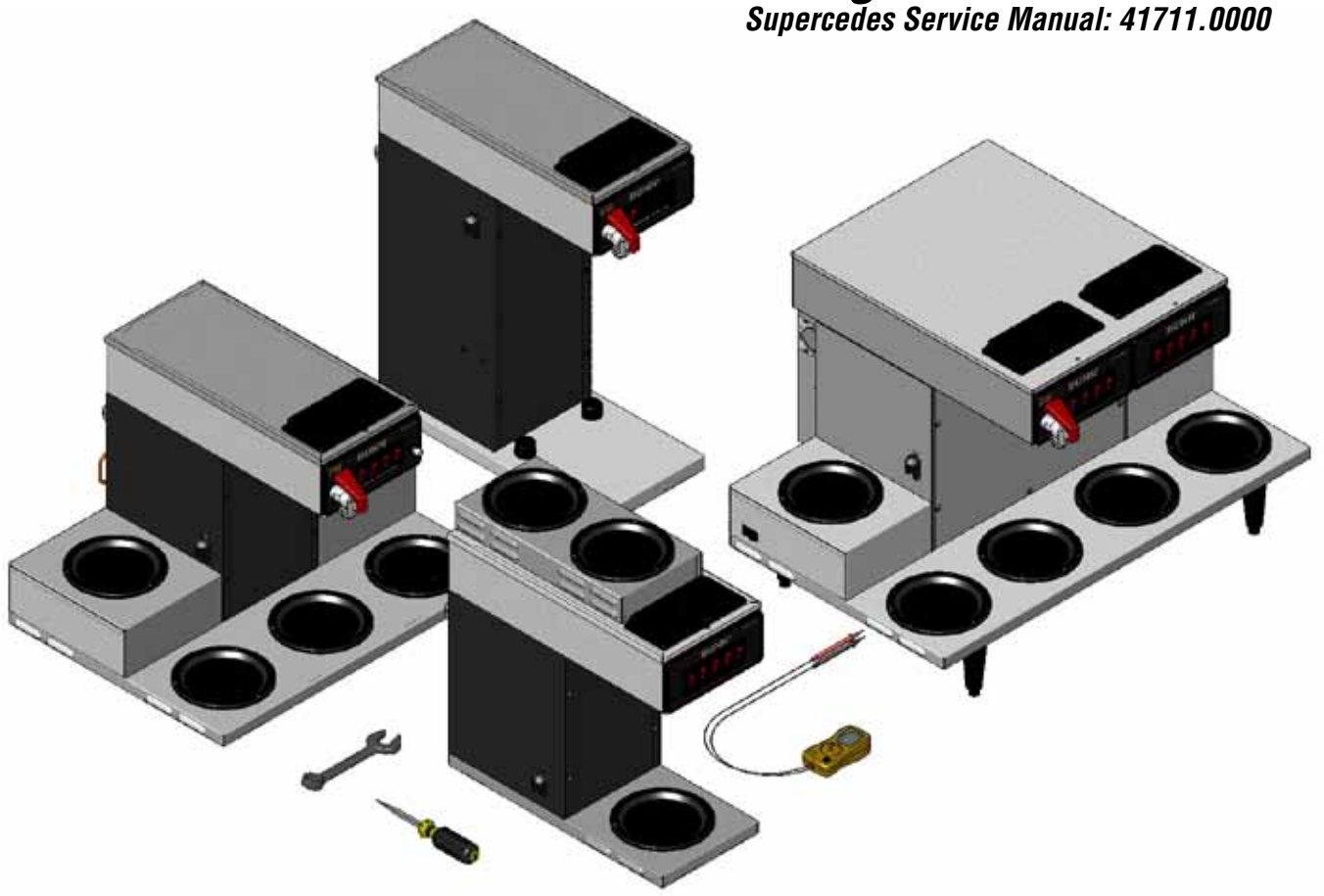

SERVICE & REPAIR MANUAL

BUNN-O-MATIC CORPORATION

POST OFFICE BOX 3227
SPRINGFIELD, ILLINOIS 62708-3227
PHONE: (217) 529-6601 FAX: (217) 529-6644

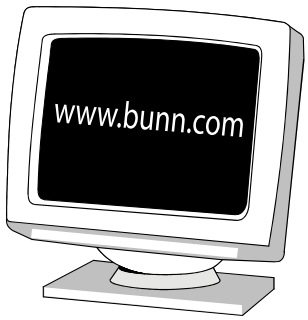

41711.0001B 05/12 ©2009 Bunn-O-Matic Corporation

BUNN-O-MATIC COMMERCIAL PRODUCT WARRANTY

Bunn-O-Matic Corp. ("BUNN") warrants equipment manufactured by it as follows:

1) Airpots, thermal carafes, decanters, GPR servers, iced tea/coffee dispensers, MCP/MCA pod brewers thermal servers and Thermofresh servers (mechanical and digital)- 1 year parts and 1 year labor.

2) All other equipment - 2 years parts and 1 year labor plus added warranties as specified below:

   a) Electronic circuit and/or control boards - parts and labor for 3 years.

   b) Compressors on refrigeration equipment - 5 years parts and 1 year labor.

   c) Grinding burrs on coffee grinding equipment to grind coffee to meet original factory screen sieve analysis - parts and labor for 4 years or 40,000 pounds of coffee, whichever comes first.

These warranty periods run from the date of installation BUNN warrants that the equipment manufactured by it will be commercially free of defects in material and workmanship existing at the time of manufacture and appearing within the applicable warranty period. This warranty does not apply to any equipment, component or part that was not manufactured by BUNN or that, in BUNN's judgment, has been affected by misuse, neglect, alteration, improper installation or operation, improper maintenance or repair, non periodic cleaning and descaling, equipment failures related to poor water quality, damage or casualty. In addition, the warranty does not apply to replacement of items subject to normal use including but not limited to user replaceable parts such as seals and gaskets. This warranty is conditioned on the Buyer 1) giving BUNN prompt notice of any claim to be made under this warranty by telephone at (217) 529-6601 or by writing to Post Office Box 3227, Springfield, Illinois 62708-3227; 2) if requested by BUNN, shipping the defective equipment prepaid to an authorized BUNN service location; and 3) receiving prior authorization from BUNN that the defective equipment is under warranty.

THE FOREGOING WARRANTY IS EXCLUSIVE AND IS IN LIEU OF ANY OTHER WARRANTY, WRITTEN OR ORAL, EXPRESS OR IMPLIED, INCLUDING, BUT NOT LIMITED TO, ANY IMPLIED WARRANTY OF EITHER MERCHANTABILITY OR FITNESS FOR A PARTICULAR PURPOSE. The agents, dealers or employees of BUNN are not authorized to make modifications to this warranty or to make additional warranties that are binding on BUNN. Accordingly, statements by such individuals, whether oral or written, do not constitute warranties and should not be relied upon.

If BUNN determines in its sole discretion that the equipment does not conform to the warranty, BUNN, at its exclusive option while the equipment is under warranty, shall either 1) provide at no charge replacement parts and/or labor (during the applicable parts and labor warranty periods specified above) to repair the defective components, provided that this repair is done by a BUNN Authorized Service Representative; or 2) shall replace the equipment or refund the purchase price for the equipment.

THE BUYER'S REMEDY AGAINST BUNN FOR THE BREACH OF ANY OBLIGATION ARISING OUT OF THE SALE OF THIS EQUIPMENT, WHETHER DERIVED FROM WARRANTY OR OTHERWISE, SHALL BE LIMITED, AT BUNN'S SOLE OPTION AS SPECIFIED HEREIN, TO REPAIR, REPLACEMENT OR REFUND.

In no event shall BUNN be liable for any other damage or loss, including, but not limited to, lost profits, lost sales, loss of use of equipment, claims of Buyer's customers, cost of capital, cost of down time, cost of substitute equipment, facilities or services, or any other special, incidental or consequential damages.

392, AutoPOD, AXIOM, BrewLOGIC, BrewMETER, Brew Better Not Bitter, BrewWISE, BrewWIZARD, BUNN Espress, BUNN Family Gourmet, BUNN Gourmet, BUNN Pour-O-Matic, BUNN, BUNN with the stylized red line, BUNNlink, Bunn-OMatic, Bunn-O-Matic, BUNNserve, BUNNSERVE with the stylized wrench design, Cool Froth, DBC, Dr. Brew stylized Dr. design, Dual, Easy Pour, EasyClear, EasyGard, FlavorGard, Gourmet Ice, Gourmet Juice, High Intensity, iMIX, Infusion Series, Intellisteam, My Café, Phase Brew, PowerLogic, Quality Beverage Equipment Worldwide, Respect Earth, Respect Earth with the stylized leaf and coffee cherry design, Safety-Fresh, savemycoffee.com, Scale-Pro, Silver Series, Single, Smart Funnel, Smart Hopper, SmartWAVE, Soft Heat, SplashGard, The Mark of Quality in Beverage Equipment Worldwide, ThermoFresh, Titan, trifecta, Velocity Brew, A Partner You Can Count On, Air Brew, Air Infusion, Beverage Bar Creator, Beverage Profit Calculator, Brew better, not bitter., BUNNSource, Coffee At Its Best, Cyclonic Heating System, Daypart, Digital Brewer Control, Nothing Brews Like a BUNN, Pouring Profits, Signature Series, Tea At Its Best, The Horizontal Red Line, Ultra are either trademarks or registered trademarks of Bunn-O-Matic Corporation.

Contents

Trouble Shooting 4
Component Access 10
Control Thermostat 10
Electronic Thermostat 11
ON/OFF Switch 12
Start Switch (Brew) 13
Solenoid (Inlet) 14
Tank Heater 16
Fill Basin 16
Tank Heater Switch 18
Thermal Cut-Off 20
Coil/Faucet 21
Limit Thermostat 22
Recovery Booster 23
Timer (Early Model) 24
Freshness Timer (Early Models) 25
Digital Brew Timer (Late Model) 26
Warmer Elements 28
Schematic Wiring Diagrams 29

TROUBLESHOOTING

A troubleshooting guide is provided to suggest probable causes and remedies for the most likely problems encountered. If the problem remains after exhausting the troubleshooting steps, contact the Bunn-O-Matic Technical Service Department.

- Inspection, testing, and repair of electrical equipment should be performed only by qualified service personnel.
- All electronic components have 120 volt ac and low voltage dc potential on their terminals. Shorting of terminals or the application of external voltages may result in board failure.
- Intermittent operation of electronic circuit boards is unlikely. Board failure will normally be permanent. If an intermittent condition is encountered, the cause will likely be a switch contact or a loose connection at a terminal or crimp.
- Solenoid removal requires interrupting the water supply to the valve. Damage may result if solenoids are energized for more than ten minutes without a supply of water.
- The use of two wrenches is recommended whenever plumbing fittings are tightened or loosened. This will help to avoid twists and kinks in the tubing.
- Make certain that all plumbing connections are sealed and electrical connections tight and isolated.
- This brewer is heated at all times. Keep away from combustibles.

WARNING –
- Exercise extreme caution when servicing electrical equipment.
- Unplug the brewer when servicing, except when electrical tests are specified.
- Follow recommended service procedures
- Replace all protective shields or safety notices

PROBLEM	PROBABLE CAUSE	REMEDY
Brew cycle will not start	1. No water	Water lines and valves to the brewer must be open.
	2. No power or incorrect voltage to the brewer	(A1) Check the terminal block for 120 volts across the black and white terminals on two wire 120 volt brewers. (A2) Check the terminal block for 120 volts across the red and white terminals and the black and white terminal on three wire 120/240 volt brewers. (A3) Check the terminal block for 200 volts on "B Series" brewers or 240 volts on "A Series" brewers across the red and black terminals.
		(B) Check circuit breakers or fuses.

TROUBLESHOOTING (cont.)

PROBLEM	PROBABLE CAUSE	REMEDY
Brew cycle will not start (cont.)	3. ON/OFF Switch	Refer to Service - ON/OFF Switch for testing.
	4. Start Switch	Refer to Service - Start Switch for testing procedures.
	5. Timer	Refer to Service - Timer for testing procedures.
	6. Solenoid Valve	Refer to Service - Solenoid Valve for testing procedures.
	7. Water strainer/flow control (.222 GPM) Early models	(A) Direction of flow arrow must be pointing towards brewer. (B) Remove the strainer/flow control and check for obstructions. Clear or replace.
Water is not hot	1. Tank Heater Switch	Refer to Service - Tank Heater Switch for testing procedures.
	2. (A) Limit Thermostat (B) Thermal Cut-Off (Brewers with Faucet) **CAUTION -** Do not eliminate or bypass limit thermostat or thermal cut-off. Use only BOM replacement parts.	Refer to Service - Limit Thermostat for testing procedures. Thermal Cut-Off for testing procedures.
	3. Control Thermostat	Refer to Service - Control Thermostat for testing procedures.
	4. Tank Heater	Refer to Service - Tank Heater for testing procedures.

TROUBLESHOOTING (cont.)

PROBLEM	PROBABLE CAUSE	REMEDY
Inconsistent beverage level in dispenser	1. Strainer /flow control (.222 GPM) Early models.	(A) Direction of flow arrow must be pointing towards the brewer. (B) Remove the strainer/flow control and check for obstruction. Clear or replace.
	2. Syphon System	The brewer must be level or slightly lower in front to syphon properly.
	3. Lime Build-up **CAUTION -** Tank and tank components should be delimed regularly depending on local water conditions. Excessive mineral build-up on stainless steel surfaces can initiate corrosive reactions resulting in serious leaks.	Inspect the tank assembly for excessive lime deposits. Delime as required.
	4. Water Pressure	The water pressure to the brewer must be at least 20 psi (138 kPa).
Consistently low beverage level in the dispenser	1. Timer	Timer must be set for at least two minutes and fifteen seconds.
	2. Strainer/flow Control (.222 GPM)	(A) Direction of flow arrow must be pointing towards brewer. (B) Remove the strainer/flow control and check for obstructions. Clear or replace.
Spitting or excessive steaming	1. Lime Build-up **CAUTION -** Tank and tank components should be delimed regularly depending on local water conditions. Excessive mineral build-up on stainless steel surfaces can initiate corrosive reactions resulting in serious leaks.	Inspect tank assembly for excessive lime deposits. Delime as required.

TROUBLESHOOTING (cont.)

PROBLEM	PROBABLE CAUSE	REMEDY
Spitting or excessive steaming (cont.)	2. Control Thermostat	Refer to Service - Control Thermostat for testing procedures.
Dripping from sprayhead	1. Syphon System	The brewer must be level or slightly lower in front to syphon properly.
	2. Lime Build-up **CAUTION -** Tank and tank components should be delimed regularly depending on local water conditions. Excessive mineral build-up on stainless steel surfaces can initiate corrosive reactions resulting in serious leaks.	Inspect the tank assembly for excessive lime deposits. Delime as required.
	3. Solenoid Valve	Remove the solenoid valve and clear any obstructions. Rebuild or replace the valve if necessary.
Water flows into tank continuously (ON/OFF Switch "ON")	1. Timer	Refer to Service - Timer for testing procedures.
Water flows into tank continuously (ON/OFF Switch "OFF")	1. Solenoid Valve	Remove the Solenoid Valve and clean any obstruction. Rebuild or replace the valve if necessary.
Beverage overflows dispenser	1.Dispenser	The dispenser must be completely empty before starting a brew cycle.
	2. Timer	Refer to Service - Timer for testing procedures.
	3. Solenoid Valve	Remove the Solenoid Valve and clean any obstruction. Rebuild or replace the valve if necessary.

TROUBLESHOOTING (cont.)

PROBLEM	PROBABLE CAUSE	REMEDY
Weak beverage	1. Filter Type	BUNN® paper filters must be used for proper extraction.
	2. Coffee Grind	A fine or drip grind must be used for proper extraction.
	3. Sprayhead	A six-hole stainless steel sprayhead must be used for proper extraction.
	4. Funnel Loading	The BUNN® paper filter must be centered in the funnel and the bed of ground leveled by gentle shaking.
	5. Water Temperature	Place an empty funnel on an empty dispenser beneath the sprayhead. Initiate a brew cycle and check the water temperature immediately below the sprayhead with a thermometer. The reading should not be less than 195°F (76°C). Adjust the control thermostat to increase the water temperature. Replace if necessary.
Dry coffee grounds remain in the funnel	1. Funnel Loading	The BUNN® paper filter must be centered in the funnel and the bed of grounds leveled by gently shaking.
Brewer is making unusal noises	1. Solenoid	The nut on the solenoid must be tight or it will vibrate during operation.
	2. Plumbing Lines	Plumbing lines should not resting on the counter top.
	3. Water Supply	(A) The brewer must be connected to a cold water line. (B) Water pressure to the brewer must not exceed 90 psi (620 kPa). Install a regulator if necessary to lower the working pressure to approximately 50 psi (345 kPa).

TROUBLESHOOTING (cont.)

PROBLEM	PROBABLE CAUSE	REMEDY
Brewer is making unusal noises (cont.)	4. Tank Heater	Remove and clean lime off the tank heater.
Low beverage serving temperature	1. Warmer	Refer to Service - Warmer element for testing procedures.
	2. ON/OFF Switch	Refer to Service - ON/OFF Switch for testing procedures.

SERVICE

This section provides procedures for testing and replacing various major components used in this brewer should service become necessary. Refer to Troubleshooting for assistance in determining the cause of any problem.

WARNING - Inspection, testing, and repair of electrical equipment should be performed only by qualified service personnel. The brewer should be unplugged when servicing, except when electrical tests are required and the test procedure specifically states to plug-in the brewer.

COMPONENT ACCESS

WARNING - Disconnect the brewer from the power source before the removal of any panel or the replacement of any component.

All components are accessible by the removal of the top cover, front inspection panel, warmer plate(s) and rear utility cover (Twins only).

CONTROL THERMOSTAT

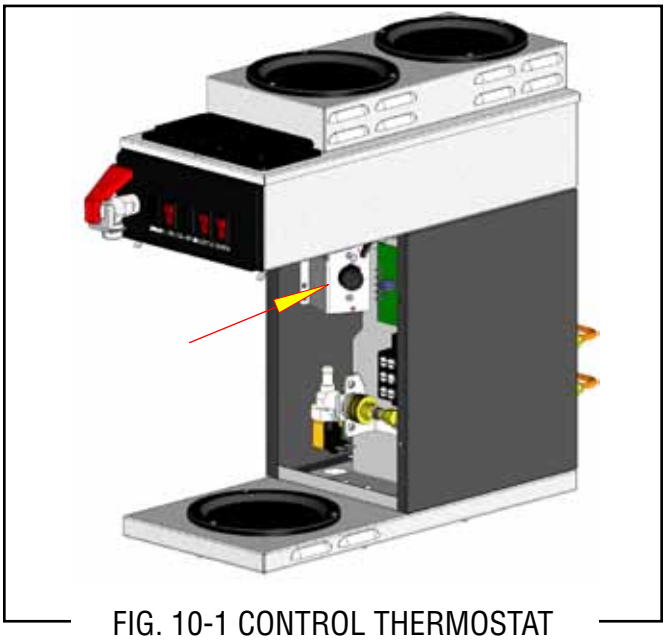

FIG. 10-1 CONTROL THERMOSTAT

Location:

The control thermostat is located inside the trunk on the upper left side of the component bracket.

Test Procedures:

1. Disconnect the brewer from the power source.
2. Disconnect the leads from control thermostat.
3. Gently remove the capillary bulb and grommet from the tank.
4. Check for continuity across the thermostat terminals. The indication must be:
   a) Continuity with knob rotated fully clockwise.
   b) No continuity with knob rotated fully counterclockwise. NOTE: First style does not have the ON/OFF feature, simply check continuity.

If continuity is not present as described, replace control thermostat.

If continuity is present as described, refer to the wiring diagrams and check the brewer wiring harness.

Removal and Replacement:

1. Disconnect the control thermostat wires.
2. Remove the thermostat capillary bulb by firmly pulling up on the capillary at the tank lid. This will disengage the grommet from the tank lid.
3. Remove the one #8-32 screw securing the control thermostat to the component bracket inside the trunk.
4. Slide the grommet to the line 4.5" above the bulb on the new capillary tube.
5. Insert the capillary bulb through the hole in the tank lid and press the grommet firmly and evenly so that the groove in the grommet fits into the tank lid.
6. Carefully bend the capillary tube so that the tube and bulb inside the tank are in the vertical position.

NOTE - The capillary tube must be clear of any electrical termination and not kinked.

7. Using #8-32 screw(s), secure the control thermostat to the component bracket inside the trunk.
8. For first type thermostat, refer to Wiring Diagrams when reconnecting thermostat wires.
9. Adjust the control thermostat as required.

NOTE: First type will only turn approximately one turn. Clockwise to the stopper is approximately 180° F, maximum counterclockwise to stopper is approximately 200° F.

Later types will be approximately 200° F when turned maximum clockwise. Turning it counterclockwise until it clicks will turn off (open contacts).

OPTIONAL ELECTRONIC THERMOSTAT (ERT):

The ERT is located inside the trunk on the upper left side of the component bracket.

Test Procedures:

1. Disconnect the brewer from the power source.
2. Gently remove the temperature sensor and grommet from the tank.
3. Check voltage across the blue wire from limit thermostat and the white wire at the terminal block. Connect the brewer to the power source. The indication must be: 120Vac.

If voltage is not present as described, refer to the wiring diagrams and check the brewer wiring harness
If voltage is present as described, proceed to #4.

4. Disconnect the brewer from the power source.
5. With the temperature sensor and grommet still out of the tank, check voltage across the black wire to the heater and the white wire at the terminal block. Connect the brewer to the power source. The indication must be: 120Vac.

If voltage is not present as described, replace ERT.
If voltage is present as described, the ERT is functioning properly.

Removal and Replacement:

1. Disconnect the control thermostat wires.
2. Remove the temperature sensor by firmly pulling-up on the metal sheath at the tank lid. This will disengage the grommet from the tank lid.
3. Remove the one #8-32 screw securing the ERT to the component bracket inside the trunk.
4. Slide the grommet to the top of the sheath.
5. Insert the temperature sensor through the hole in the tank lid and press the grommet firmly and evenly so that the groove in the grommet fits into the tank lid.
6. Using the #8-32 screw, secure the ERT to the component bracket inside the trunk.
7. For first type thermostat, refer to Wiring Diagrams when reconnecting ERT wires.
8. Adjust the ERT as required.

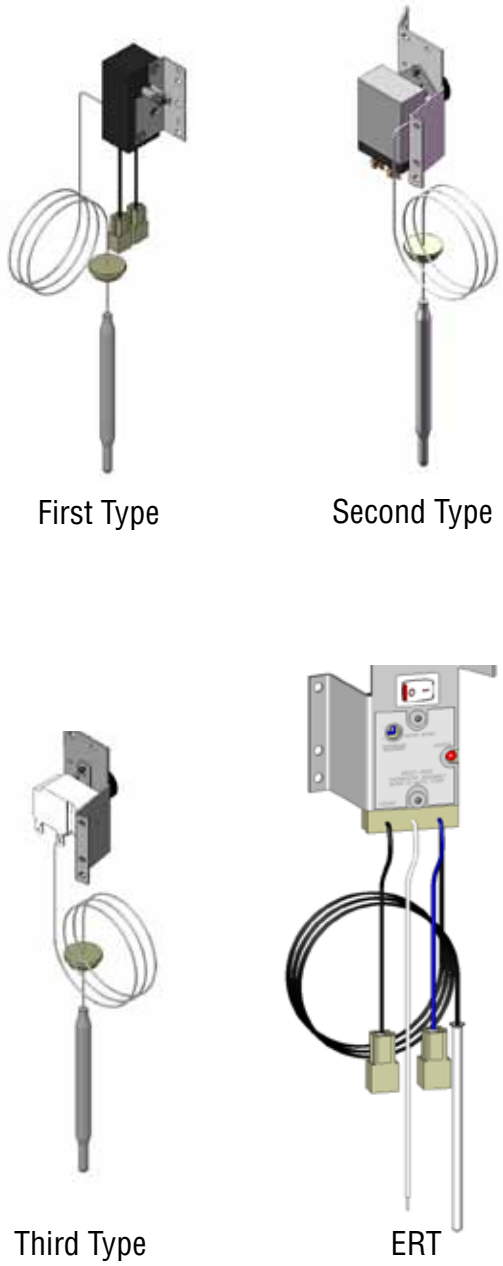

FIG 11-1 THERMOSTAT TERMINALS

NOTE: The ERT has a range of 170° - 210°F. Use care not to set it too high or boiling could occur.

SERVICE (cont.)
ON/OFF WARMER SWITCH

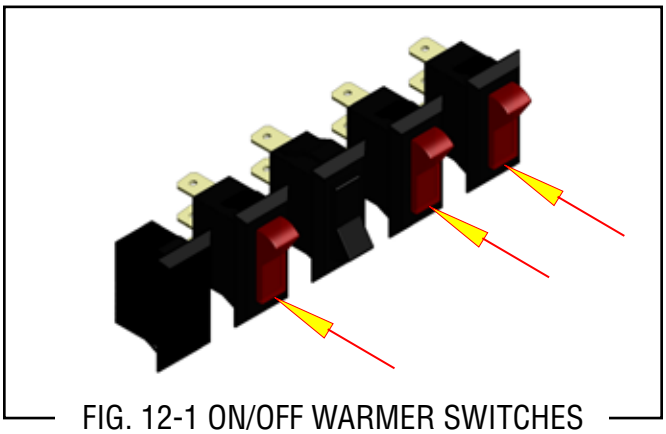

FIG. 12-1 ON/OFF WARMER SWITCHES

Location:

The ON/OFF switch(s) are located on the front of the hood.

Test Procedure:

1. Disconnect the brewer from the power source.
2. Viewing the switch from the back remove the white or red wire from the upper terminal and the black wire from the center terminal.
3. Check the voltage across the white wire or red wire and the black wire with a voltmeter. Connect the brewer to the power source. The indication must be:
   a) 120 volts ac for two wire 120 volt models and three wire 120/240 volt models.
   b) 200 to 240 volts ac for two wire 200 or 240 volt models.
4. Disconnect the brewer from the power source.

If voltage is present as described, reconnect the white or red wire and proceed to #5.
If voltage is not present as described, refer to the Wiring Diagrams and check the brewer wiring harness.

5. With the black wire removed, remove the wire from the lower terminal.
6. Check for continuity across the center and lower terminal with the switch in the "ON" position. Continuity must not be present when the switch is in the "OFF" position.

If continuity is present as described, reconnect the black wire to the center terminal and the remaining wire to the lower terminal.
If continuity is not present as described, replace the switch.

Removal and Replacement:

1. Remove the wires from the switch terminals.
2. Compress the clips inside the hood and gently push the switch through the opening.
3. Push the new switch into the opening and spread the clips to hold switch in the hood.
4. Refer to Fig.7 when reconnecting the wires.

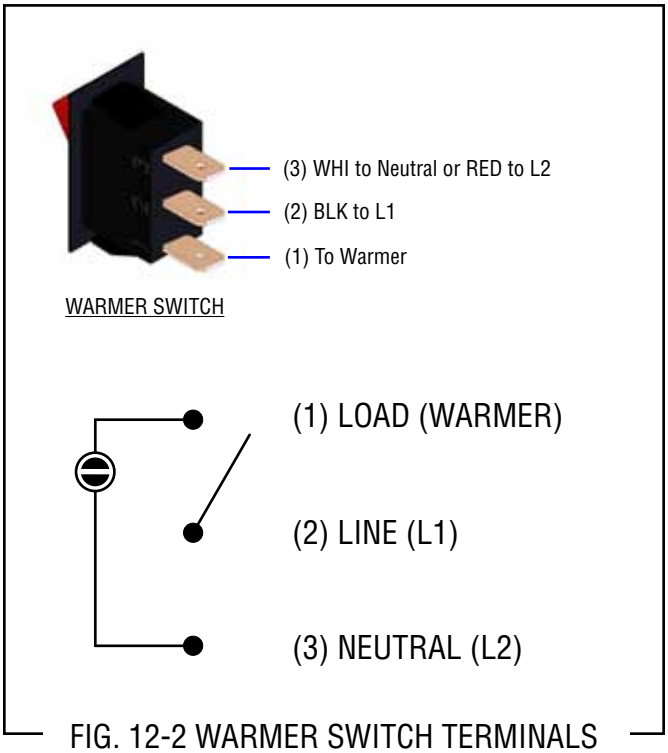

FIG. 12-2 WARMER SWITCH TERMINALS

SERVICE (cont.)

START SWITCHES

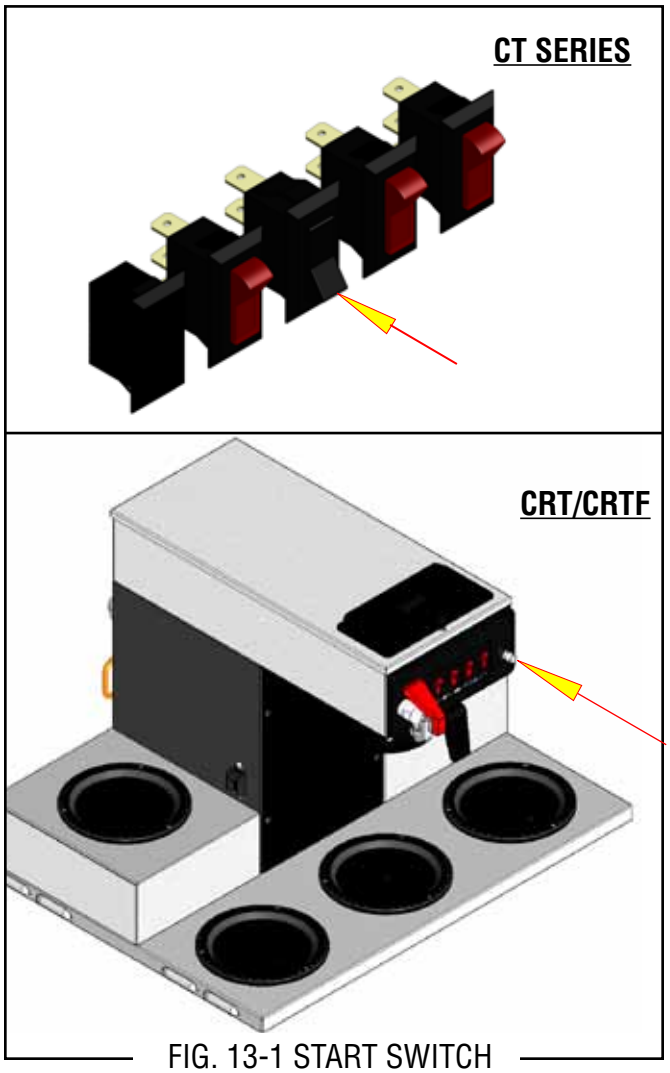

FIG. 13-1 START SWITCH

Location: CRT/CRTF

On brewers w/out fresh light, the start switch is located in the right front of the hood.

On brewers w/fresh light, the start switch is located on the right side of the hood.

Location: CT/CWT/CWTF/TWINS

On most "CT" series brewers, the start switch is located in the front of the hood.

On some "convertible" or "CS" brewers, the start switch is located on either the right or left side of the hood.

NOTE: Optional on the left and right side warmer housings on 0/6 TWINS, connected in parallel to front mounted start switches.

Test Procedure:

1. Disconnect the brewer from the power supply.
2. Disconnect the blue wire and the white/red wire from the switch terminals.
3. Check for continuity across the two terminals on the switch when it is held in the "pressed-in" position. Continuity must not be present across these terminals in the released position.

If continuity is present as described, reconnect the blue wire and the white/red to the switch terminals.
If continuity is not present as described, replace the switch.

Removal and Replacement:

1. Remove the blue wire and white/red from the start switch.
2. Remove round retaining nut from the front of the switch and remove switch and internal tooth lockwasher from the inside of the hood.
3. Push new switch with internal tooth lockwasher through the hole in the hood and secure with round retaining nut.
4. Refer to Fig. 11 when reconnecting the wires.

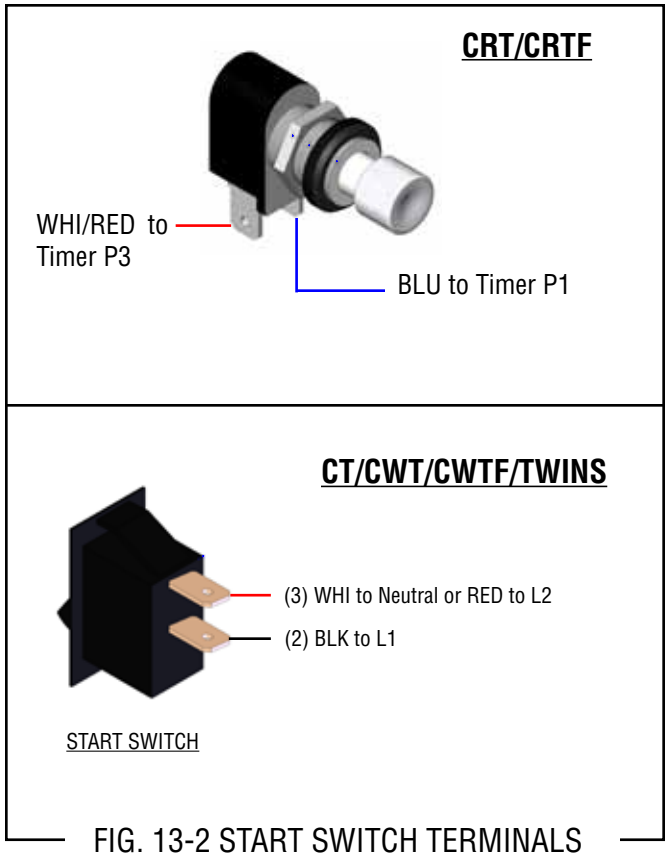

FIG. 13-2 START SWITCH TERMINALS

SERVICE (cont.)

SOLENOID VALVES

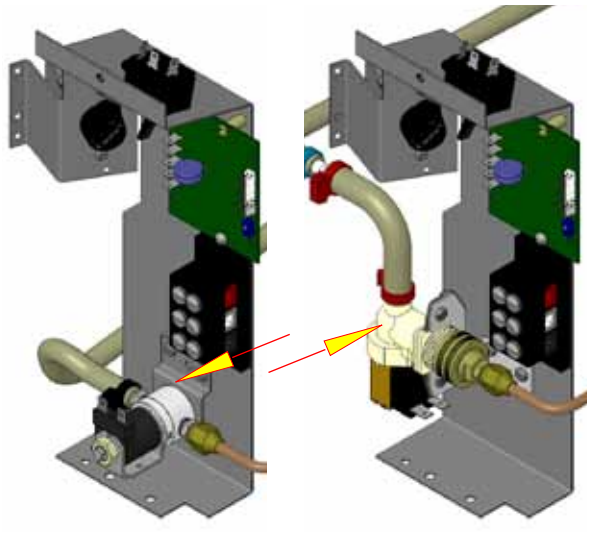

FIG. 14-1 SOLENOID VALVE

Location:

The solenoid valve is located inside the trunk on the lower center part of the component bracket.

Test Procedures:

1. Disconnect the brewer from the power source.
2. Disconnect the white and black wires from the solenoid valve. With the "ON/OFF" switch in the "ON" upper position press the start switch.
3. Check the voltage across the white and black wires with a voltmeter. Connect the brewer to the power source. The indication must be:
   a) 120 volts ac for two wire 120 volt models and three wire 120/240 volt models.
   b) 200 to 240 volts ac for two wire 200 or 240 volt models.
4. Disconnect the brewer from the power source,

If voltage is present as described, proceed to #5
If voltage is not present as described, refer to Wiring Diagrams and check brewer wiring harness.

5. Check for resistance across the solenoid valve coil terminals.

If resistance is present as described, reconnect the white and black wire from the timer.
If resistance is not present as described, replace the solenoid valve.

6. Check the solenoid valve for coil action. Connect the brewer to the power source. With "ON/OFF" switch in the "ON' upper position press start switch and listen carefully in the vicinity of the solenoid valve for a" clicking" sound as the coil magnet attracts.
7. Disconnect the brewer from the power source.

If the sound is heard as described and water will not pass through the solenoid valve, there may be a blockage in the water line before the solenoid valve or, the solenoid valve may require inspection for wear, and removal of waterborne particles.
If the sound is not heard as described, replace the solenoid valve.

Removal and Replacement:

1. Remove the white and black from the solenoid valve.
2. Turn off the water supply to the brewer.
3. Disconnect the water lines to and from the solenoid valve.
4. Remove the two #8-32 screws securing the solenoid mounting bracket to the component bracket. Remove solenoid bracket and solenoid valve as an assembly.
5. Remove the two #10-32 screws and lockwashers securing the solenoid valve to the solenoid bracket.
6. Using two #10-32 screws and lockwashers install new solenoid valve on solenoid mounting bracket.
7. Using two #8-32 screws install solenoid valve and bracket to the component bracket.
8. Securely fasten the water lines to and from the solenoid valve.
9. Refer to Fig. 9 when reconnecting the wires.

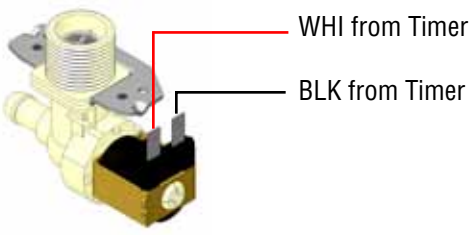

FIG. 14-2 SOLENOID VALVE TERMINALS

SERVICE (cont.)

SOLENOID VALVES

Disassembly:

1. Use of the basin wrench 01060.0000 is recommended for disassembly of early style valves as illustrated below.
2. Disconnect from power source and turn off the water supply to the brewer.
3. Disconnect the water lines to and from the solenoid valve.
4. Remove the two #8-32 screws securing the solenoid mounting bracket to the component bracket. Remove solenoid bracket and solenoid valve as an assembly.
5. Remove the two #10-32 screws and lock washers securing the solenoid valve to the solenoid bracket.
6. Disassemble the valve according to the illustrations that correspond to the particular valve you have.
7. On early style valves, leave the fittings installed in the base to use as leverage. ***DO NOT CLAMP THE BASE WITH LOCKING PLIERS AS THIS CAN CAUSE DAMAGE!***
8. Refer to Illustrated Parts Catalogs for replacement solenoids and repair/rebuild kits.



120VAC - 247 Ω
240VAC - 757 Ω

FIG. 15-1 FIRST STYLE

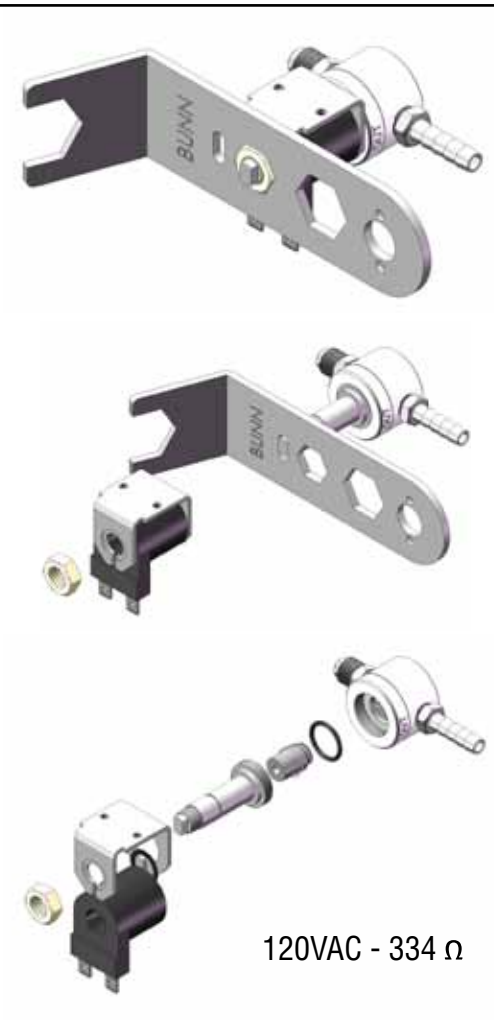

120VAC - 334 Ω

FIG. 15-2 SECOND STYLE



120VAC - 1.18K Ω
240VAC - 3.76K Ω

FIG. 15-2 THIRD STYLE

FILL BASIN



FIG. 16-1 TANK HEATER

Disassembly:

1. Use of the basin wrench 01060.0000 is recommended for removal of the fill basin.
2. Disconnect from power source and turn off the water supply to the brewer.
3. Remove top cover.
4. Use the basin wrench (as shown above) turning counterclockwise to remove inlet fitting.
5. Lift basin off of the tank inlet.
6. Use new inlet gasket when reinstalling.

TANK HEATER

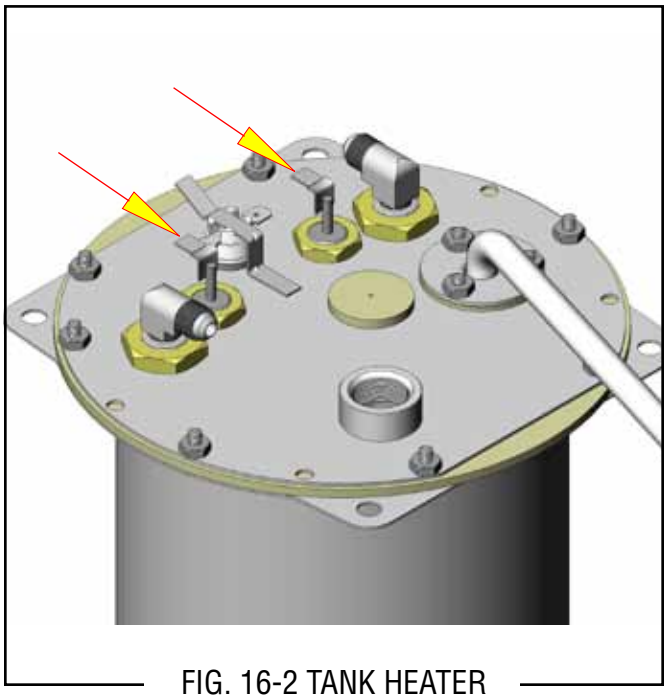

FIG. 16-2 TANK HEATER

Location:

The tank heater is located inside the tank and secured to the tank lid.

Test Procedures:

1. Disconnect the brewer from the power supply.
2. Check the voltage across the black and white wires on 120 volt models or the black and red wires for 120/240 volt models, 200 volt models and 240 volt models with a voltmeter. Connect the brewer to the power source. The indication must be:
   a) 120 volts ac for two wire 120 volt 20 amp models .
   b) 240 volts ac for three wire 120/240 volt models.
   c) 200 to 240 volts ac for two wire 200 or 240 volt models.
3. Disconnect the brewer from the power source.

If voltage is present as described, proceed to #4
If voltage is not present as described, refer to the Wiring Diagrams and check wiring harness.

4. Disconnect the wires from the tank heater terminals.
5. Check resistance value across tank heater terminals and compare to chart.

HEATER	RESISTANCE
1800W-120V	7.40 Ω - 8.70 Ω
1850W-220V	24.40 Ω -28.40 Ω
3500W-200V	10.70 Ω -12.36 Ω
3500W-240V	15.36 Ω -17.90 Ω
TERMINAL TO SHEATH - INFINITE (OPEN)	

FIG. 17-1 TANK HEATER RESISTANCE

If resistance is present as described, reconnect the wires, the tank heater is ok.
If resistance is not present as described, replace the tank heater.

NOTE- If any resistance is read between sheath and either terminal, remove and inspect heater for cracks in the sheath.

Removal and Replacement:

1. Disconnect the water supply tube from the fill basin.
2. Remove the tank inlet fitting securing the fill basin to the tank lid, remove fill basin and tank inlet gasket. Set all three parts aside for reassembly.
3. On brewers with faucet, shut-off water supply to the brewer and disconnect the inlet and outlet water lines to the faucet coil assembly.
4. Disconnect the black wire on the limit thermostat from the tank heater switch. On late model brewers also disconnect the blue wire from the limit thermostat to the control thermostat.
5. Disconnect the black wire and the white or red wire from the tank heater terminals.
6. Remove sprayhead and the hex nut securing the sprayhead tube to the hood. Set aside for reassembly.
7. Remove the eight #8-32 nuts securing the tank lid to the tank.
8. Remove the tank lid with limit thermostat, sprayhead tube, tank heater, coil assembly and control thermostat w/bracket (early models only).
9 Remove the two hex nuts securing the tank heater to the tank lid. Remove tank heater with gaskets and discard.
10. Install new tank heater with gaskets on the tank lid and secure with two hex nuts.

TANK HEATER (Cont.)

11. Install tank lid with limit thermostat, sprayhead tube, tank heater, coil assembly (brewers with faucet) and control thermostat with bracket (early brewers only) using eight #8-32 hex nut.
12. Reconnect the inlet and outlet water lines to the faucet coil assembly.
13. Secure sprayhead tube to hood using a hex nut.
14. Install sprayhead.
15. Reconnect the wires to the limit thermostat, tank heater and control thermostat. See limit thermostat and control thermostat sections in this manual when reconnecting wires.
16. Install fill basin, secure with tank inlet fitting and gasket. Insert water supply line through grommet in fill basin.
17. Refer to Fig.13 when reconnecting the tank heater wires.

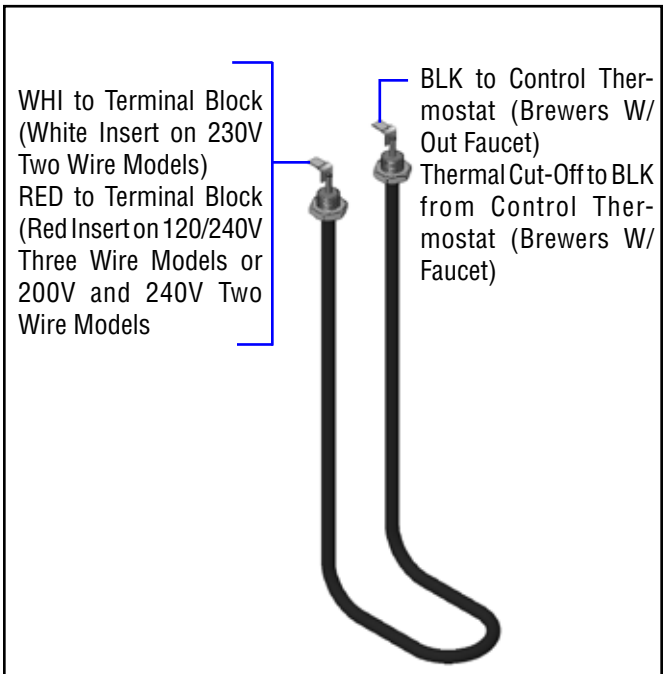

FIG. 17-2 TANK HEATER TERMINALS

SERVICE (cont.)

TANK HEATER SWITCH

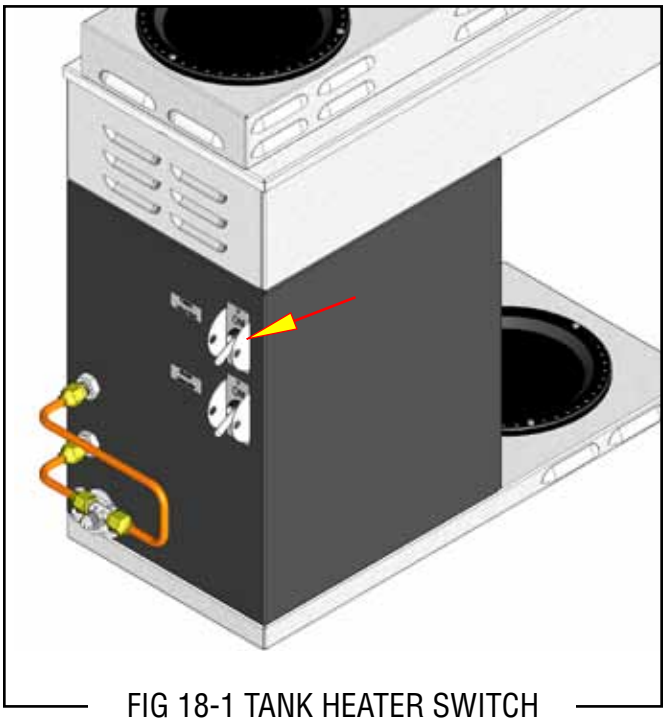

FIG 18-1 TANK HEATER SWITCH

Location:

The tank heater switch is located on the rear of the brewer on the upper left side of the trunk.

Test Procedure:

1. Disconnect the brewer from the power source.
2. Disconnect the black wire from the limit thermostat.
3. With the tank heater switch in the "ON" position and with a voltmeter, check the voltage between the black wire removed from the limit thermostat and the white wire or red wire on the tank heater. Connect the brewer to the power source. The indication must be:
   a) 120 volts ac on two wire 120 volt models.
   b) 240 volts ac on three wire 120/240 volt models.
   c) 200 to 240 volts ac on 200 volt or 240 volt models.
4. Disconnect the brewer from the power source.

If voltage is not present as described, proceed to #5.
If voltage is present as described, the switch is working properly.

5. With the tank heater switch in the "ON" upper position, check for continuity between the black wire removed from the limit thermostat and the black insert on the terminal block. Continuity should not be present in the "OFF" lower position.

If continuity is present as described, the tank heater switch is operating properly.
If continuity is not present as described, replace the tank heater switch.

Removal and Replacement:

1. Shut off and disconnect the incoming water supply to the brewer.
2. On automatic brewers gently remove the fill tube from back of fill basin.
3. Remove the tank inlet fitting securing fill basin the tank lid. Remove fill basin and gasket. Set all three parts aside for reassembly.
4. On brewers with faucets, disconnect the water supply to coil assembly and remove the tube from the tank to the faucet.
5. Remove sprayhead and hex nut securing sprayhead tube to the hood. Set aside for reassembly.
6. Disconnect the wires on the limit thermostat and the tank heater and the control thermostat (early models).
7. Gently pull the thermostat sensor and grommet from the tank lid.
8. Insert a tube to the bottom of the tank and syphon ALL of the water out.
9. Remove the two #8-32 screws securing the tank assembly to the hood.
10. Lift tank and components out as an assembly and set aside for reassembly.
11. Disconnect the two black wires from the tank heater switch.
12. Remove the plastic facenut, hex facenut and the switch indicator/guard bracket that secures tank heater switch to the rear of the brewer. Remove switch and discard.
13. Insert new tank heater switch through the hole in the upper left rear of the trunk and secure with switch indicator/guard bracket, hex facenut and plastic facenut.
14. Reconnect the two black wires to the tank heater switch terminals.

SERVICE (cont.)

TANK HEATER SWITCH (cont.)

15. Set tank assembly inside the hood on mounting brackets and secure with two #8-32 screws.
16. Reconnect the wires to the limit thermostat, tank heater and the control thermostat. Refer to limit thermostat, tank heater and control thermostat sections in this manual when reconnecting wires.
17. Brewers with faucet reinstall the faucet tube and reconnect the water supply tube to the coil assembly.
18. Secure the sprayhead tube to the hood using hex nut.
19. Install sprayhead.
20. Install fill basin, inlet gasket and secure to tank lid with tank inlet fitting.
21. Carefully install water fill tube into the back of the fill basin.
22. Reconnect and turn on the incoming water supply.
23. Refer to Fig. 15 when reconnecting the wires.

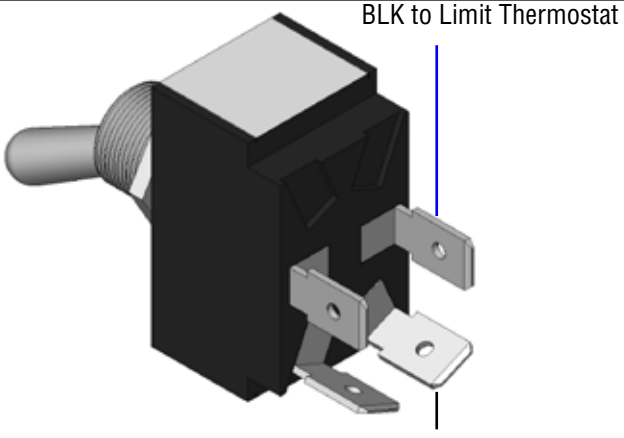

FIG. 19-1 TANK HEATER SWITCH TERMINALS

SERVICE (cont.)

THERMAL CUT-OFF (Brewers W/Faucet)

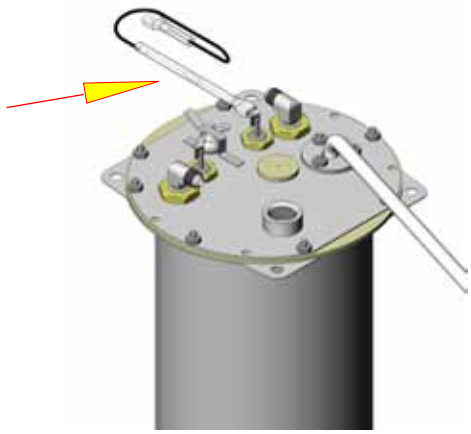

Fig. 20-1 THERMAL CUT-OFF

Location:

The thermal cut-off (TCO) is a thermal fuse located above the tank lid, connected to the tank heater.
NOTE: Installed only on tanks with coil faucet.
CE models have an additional TCO connected to the other heater terminal.

Test Procedures:

1. Disconnect the brewer from the power source.
2. Disconnect both ends of the TCO.
3. Check for continuity across TCO with an ohm-meter.

If continuity is present as described, the TCO is operating properly.
If continuity is not present as described, replace the TCO.



FIG. 20-2 TESTING TCO

Removal and Replacement:

1. Disconnect both ends of the TCO.
2. Install new thermal cut-off.
3. Refer to Fig. 17 when reconnecting wires.

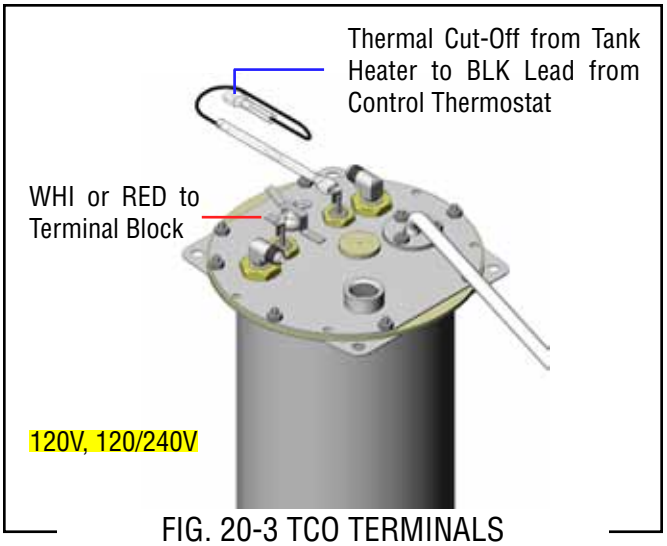

FIG. 20-3 TCO TERMINALS

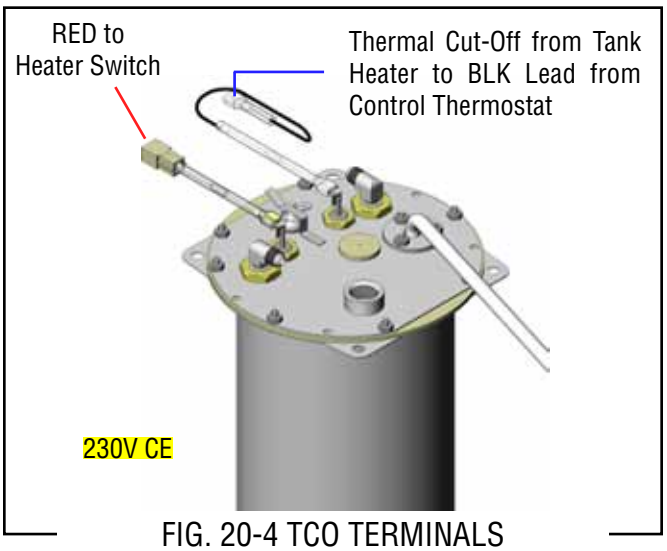

FIG. 20-4 TCO TERMINALS

SERVICE (cont.)
COIL/FAUCET

Location:

The coil for the faucet is located in the tank.

Operation:

Water inside the coil is separate from the brewing water and is always under line pressure. Brewing water in the tank heats the submerged coil. Use of a coil faucet during a brew cycle will not cause short potting, but is limited to 8-10 ounces of hot water before the cooler water is passed through coil.

Removal and Replacement:

1. Disconnect the brewer from the power and water sources.
2. Turn and remove aerator assembly from bottom of faucet. Clean parts of any mineral buildup. Install new gasket when reassembling.
3. Remove the bonnet nut and remove handle assembly.
4. Remove the seat cup. Clean inside the faucet body and install new seat cup.

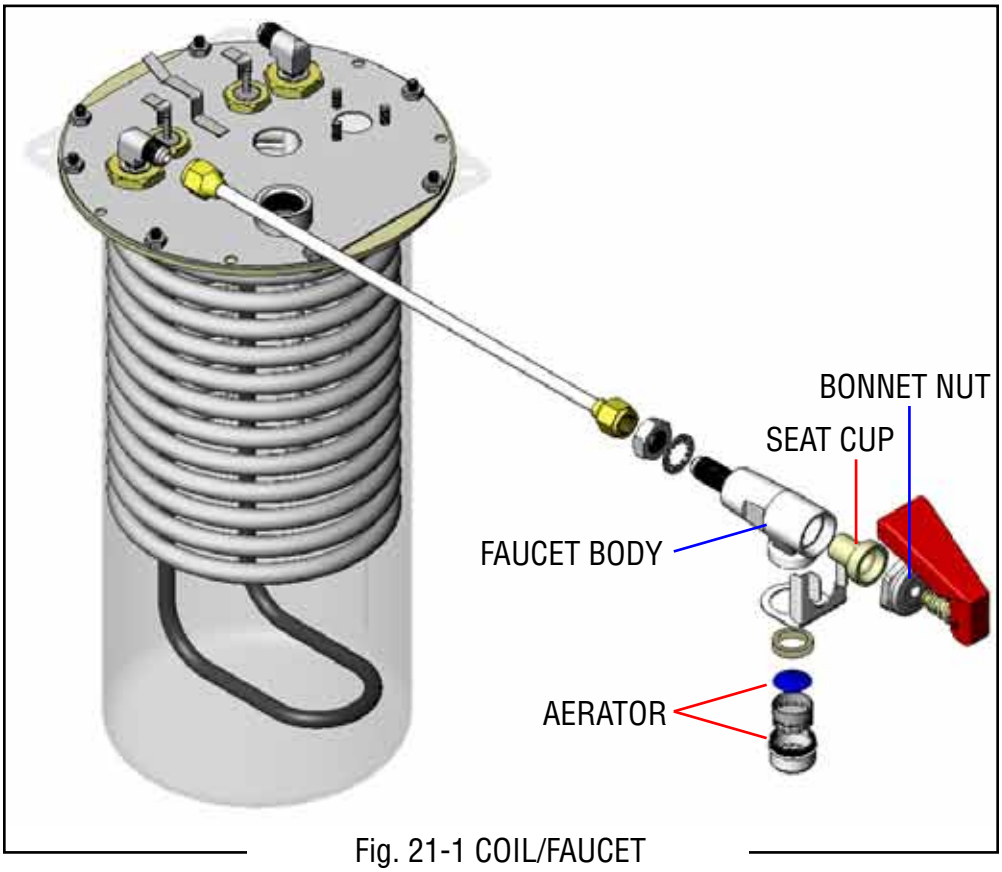

Fig. 21-1 COIL/FAUCET

SERVICE (cont.)
LIMIT THERMOSTAT

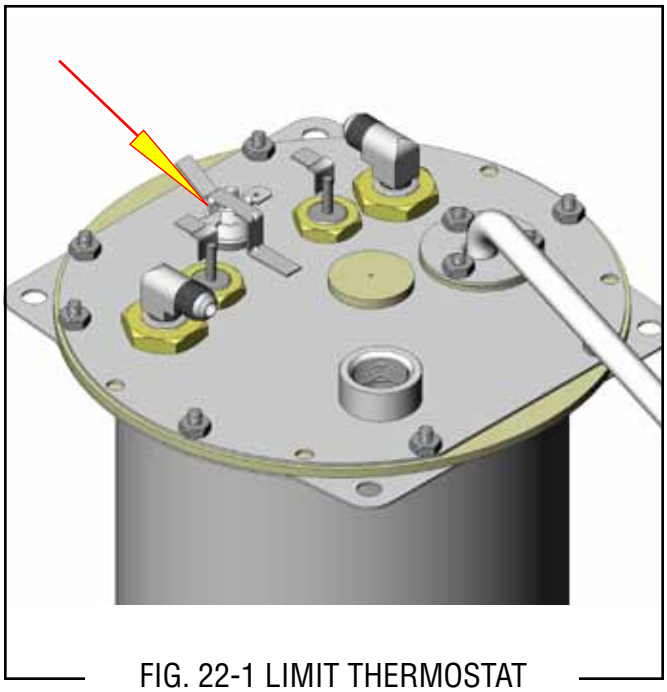

FIG. 22-1 LIMIT THERMOSTAT

Location:

___The limit thermostat is located inside the rear of the hood on the tank lid.

Test Procedures:

1. Disconnect the brewer from the power source.
2. Disconnect the blue and black wires from the limit thermostat.
3. Check for continuity across the limit thermostat terminals with a ohmmeter.

If continuity is present as described, the limit thermostat is operating properly.
If continuity is not present as described, replace the limit thermostat.

Removal and Replacement:

1. Remove all wires from limit thermostat terminals.
2. Carefully slide the limit thermostat out from under the retaining clip and remove limit thermostat.
3. Carefully slide the new limit thermostat into the retaining clip.
4. Refer to the Fig. 5 when reconnecting the wires.

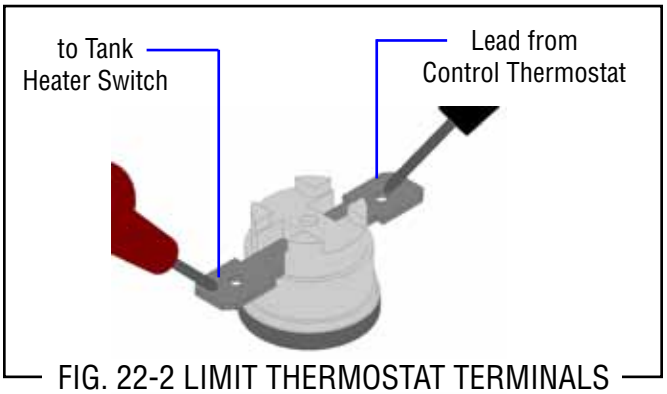

FIG. 22-2 LIMIT THERMOSTAT TERMINALS

RECOVERY BOOSTER RELAY (OPTIONAL)

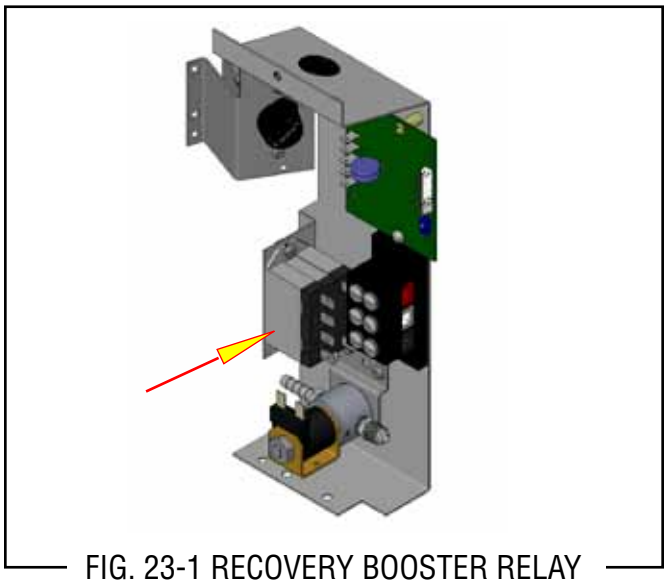

FIG. 23-1 RECOVERY BOOSTER RELAY

Location

The recovery booster(s) are located inside the trunk on the center of the component brackets just above the solenoid valve. The coil is activated by the timer/ solenoid circuit. The contacts then close, bypassing the mechanical thermostat, thereby allowing faster heating of the incoming water in the tank.

Test Procedures

1. Disconnect the brewer from the power source.
2. Disconnect the white and black wires from the coil of the recovery booster relay.
3. With a voltmeter, check the voltage across the white and the black wires. Connect the brewer to the power source and initate a brew cycle. The indication must be 120 volts ac.
4. Disconnect the brewer from the power source.

If voltage is present as described, proceed to #5.
If voltage is not present as described, refer to *Wiring Diagrams* and check the brewer wiring harness.

5. Check the resistance across the coil's terminals.

If resistance is present as described in FIG 9, reconnect the white and black wires to the coil.
If resistance is not present as described, replace the relay.

6. Disconnect the blue and black wires from the relay contact terminals. Connect the brewer to the power source. With the "ON/OFF" switch in the "ON" position and the start switch pressed and released, check for continuity across relay terminals.
7. Disconnect the brewer from the power source.

If continuity is present as described, reconnect the blue and black wires to the relay contact terminals.
If continuity is not present as described replace the relay.

Removal and Replacement:

1. Remove all wires from the relay.
2. Remove the two #8-32 screws securing the relay mounting bracket to the component bracket. Remove relay bracket and relay as an assembly.
3. Remove the screw securing the relay to the relay mounting bracket.
4. Install new relay to the component bracket.
5. Refer to Fig. 9 when reconnecting the wires.

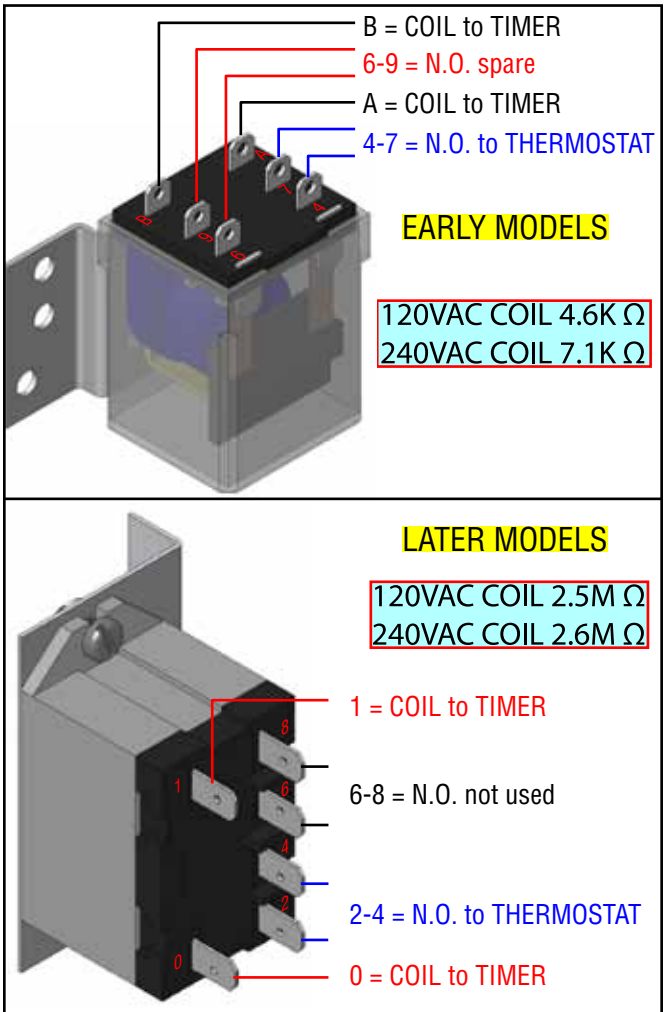

FIG. 23-2 BOOSTER RELAY TERMINALS

SERVICE (cont.)

TIMER (Early Models)

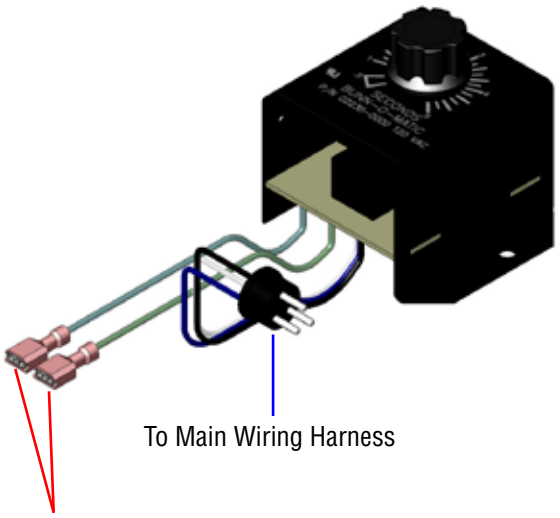

EARLY STYLE

FIG. 24-1 TIMER TERMINALS

Location:

The timer is located inside the front of the trunk on the upper right side of component bracket.

Test Procedure.

1. Disconnect the brewer from the power source.
2. Disconnect the polarized, three pin connector from the brewer wiring harness.
3. With a voltmeter, check the voltage across sockets P2 & P3 (white and white/red wires) of the female connector when the "ON/OFF" switch is in the "ON" position (upper). Connect the brewer to the power source. The indication must be:
   a) 120 volts ac for two wire 120 volt models and three wire 120/240 volt models.
   b) 200 to 240 volts ac on two wire 200 volt or 240 volt models.
4. Disconnect the brewer from the power source.

If voltage is present as described, proceed to #5.
If voltage is not present as described, refer to the Wiring Diagrams and check the brewer wiring harness.

5. Check the voltage across the sockets P1 & P2 (blue and white wires) of the female connector with a voltmeter when the "ON/OFF" switch is in the "ON" position (upper) and start switch pressed. Connect the brewer to the power source. The indication must be:
   a) 120 volts ac for two wire 120 volt models and three wire 120/240 volt models.
   b) 200 to 240 volts ac for two wire 200 volt or 240 volt models.
6. Disconnect the brewer from the power source.
7. Reconnect the three pin connector from main wiring harness to the timer.

If voltage is present as described, proceed to #8
If voltage is not present as described, refer to Wiring Diagrams and check the start switch and brewer wiring harness.

8. With a voltmeter, check the voltage across the black and white wires when the "ON/OFF" switch is in the "ON" position (upper) and the "START" switch is pressed to the "START" position and released. Connect the brewer to the power source. The indication must be:
   a) 120 volts ac for approximately 20 seconds for two wire 120 volt models and three wire 120/240 volt models.
   b) 200 to 240 volts ac for approximately 20 seconds for two wire 200 volt or 240 volt models.

If voltage is present as described, the brew timer is operating properly. Reconnect the polarized, three pin connector.
If voltage is not present as described, replace the timer.

Removal and Replacement:

1. Separate all connectors between the brewer wiring harness and the timer.
2. Remove the one #8-32 screw securing timer to component bracket.
3 Install new timer circuit board as described in Late Model Timer section on the following pages.
4. Refer to Fig. 21 when reconnecting the wires.
5. Install the Timer Setting decal provided with the replacement timer kit, below the schematic on the inside of the front access panel.
6. Adjust the timer as required. Refer to Late Model Timer section on the following pages.

SERVICE (cont.)
FRESHNESS TIMER (Early Models)

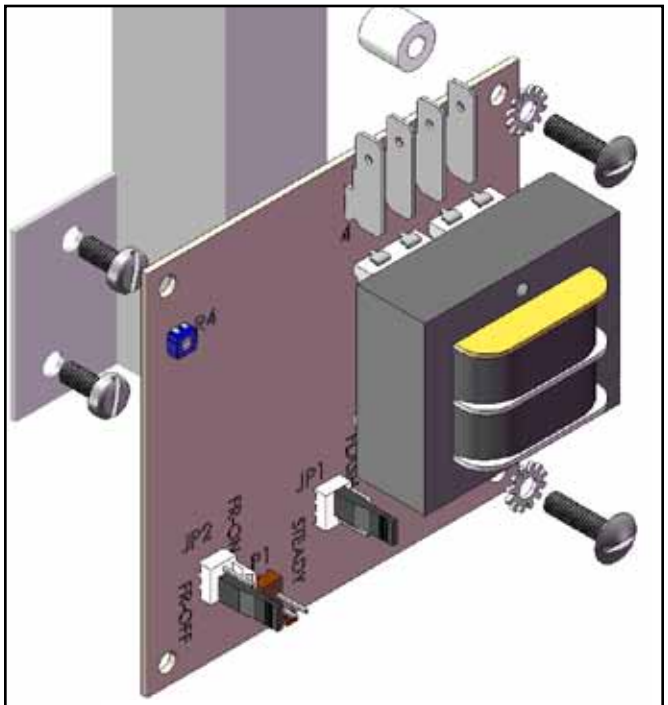

FIG. 25-1 TIMER TERMINALS

Location:

The freshness timer is located inside the front of the trunk on the component bracket.

Operation:

The freshness timer activates an LED on the control panel after a predetermined amount of time (after the brew cycle) to indicate carafe on warmer too long.

Settings: Default settings underlined

JP1: Choose between flashing LED or steady.

JP2: Choose whether the LED stays ON, then turns off; or is off, then turns on at the end of delay.

R4: Delay time adjustment, 20-60 minutes.

Test Procedure.

1. Disconnect the brewer from the power source.
2. With a voltmeter, check the voltage across T1 & T2 (black & white wires) of the fresh timer. Connect the brewer to the power source. The indication must be:
   a) 120 volts ac for two wire 120 volt models and three wire 120/240 volt models.
   b) 200 to 240 volts ac on two wire 200 volt or 240 volt models.
3. Disconnect the brewer from the power source.

If voltage is present as described, proceed to #4.
If voltage is not present as described, refer to the Wiring Diagrams and check the brewer wiring harness.

4. Check the voltage across the T3 and T4 (white/orange and white/blue wires) of the fresh timer with a voltmeter when the "ON/OFF" switch is in the "ON" position (upper) and start switch pressed. Connect the brewer to the power source. The indication must be: (when solenoid is activated)
   a) 120 volts ac for two wire 120 volt models and three wire 120/240 volt models.
   b) 200 to 240 volts ac for two wire 200 volt or 240 volt models.
5. Disconnect the brewer from the power source.
6. Reconnect the three pin connector from main wiring harness to the timer.

If voltage is present as described, proceed to #7
If voltage is not present as described, refer to Wiring Diagrams and check the start switch and brewer wiring harness.

7. With a voltmeter, check the voltage across connector P1 after the delay period (JP1 set to "STEADY", and JP2 set to "ON"). The indication must be: 3-5 volts dc (when solenoid is activated).

If voltage is present as described, the fresh timer is operating properly. If voltage is not present as described, replace the timer. NOTE: The freshness timer is no longer available.

Removal and Replacement:

1. Disconnect the brewer from the power source.

2. Disconnect all four connectors from the timer.
2. Remove the two #8-32 screws securing timer to component bracket.

6. Adjust the timer as required. Refer to Late Model Timer section on the following pages.

SERVICE (cont.)

DIGITAL BREW TIMER (Late Models)

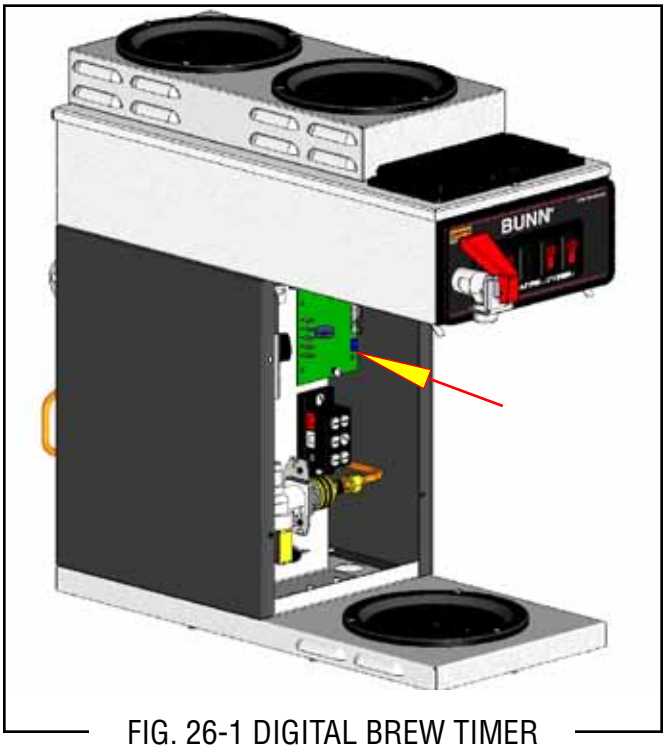

FIG. 26-1 DIGITAL BREW TIMER

Location:

The timer is located inside the front of the trunk on the upper right side of component bracket.

Test Procedure

NOTE: Do not remove or install wires while timer board is installed. *Pressure applied to one side may cause damage to the board*.

1. Disconnect the brewer from the power source and remove the front access panel.
2. With a voltmeter, check the *supply* voltage across terminals TL1 and TL2 when the "ON/OFF" switch is in the "ON" position. Connect the brewer to the power source. The indication must be:
   a) 120 volts ac for two wire 120 volt models and three wire 120/240 volt models.
   b) 200 to 240 volts ac on two wire 200 volt or 240 volt models.
3. Disconnect the brewer from the power source.

If voltage is present as described, proceed to #4.
If voltage is not present as described, refer to the *Wiring Diagrams* and check the wiring harness.

4. With a voltmeter, check the output voltage across terminals TL2 and TL4 when the "ON/OFF" switch is in the "ON" position. Connect the brewer to the power source and press the "START" switch. The indication must be as follows:
   a) 120 volts ac for two wire 120 volt models and three wire 120/240 volt models.
   b) 200 to 240 volts ac for two wire 200 volt or 240 volt models.

If voltage is present as described, the timer is operating properly. Reset the timer as required, to obtain the desired brew volume.
If voltage is not present as described, proceed to #6.

6. With a voltmeter, check the *input start* voltage across terminals TL2 and TL5 when the "ON/OFF" switch is in the "ON" position. Connect the brewer to the power source and press the "START" switch. The indication must be as follows:
   a) 120 volts ac for two wire 120 volt models and three wire 120/240 volt models.
   b) 200 to 240 volts ac on two wire 200 volt or 240 volt models.

If voltage is not present as described, refer to the *Wiring Diagrams* and check the wiring harness to the start switch.
If voltage is present as described, disconnect the brewer from the power source and replace the timer.

Removal and Replacement:

1. Remove the two #8-32 screws securing circuit board to the mounting bracket.
2. Remove circuit board and spacers (as required).
3. Remove all wires from the timer.

4. Attach all wires to the replacement timer board prior to installation to the component mounting bracket. Refer to FIG. 21 when reconnecting the wires.
5. Install new circuit board with spacers (as required) to the component mounting bracket.
6. Adjust the timer as described in the next section.

SERVICE (cont.)

DIGITAL BREW TIMER (Late Models)(cont.)

Timer Setting:

NOTE: Prior to setting or modifying volumes, check that the brewer is connected to water supply, the tank is properly filled, and a funnel and server are in place.

NOTE: All volume settings must be done with the sprayhead installed.

1. **Modifying brew volumes.** To modify a brew volume, first check that the SET/LOCK switch is in the "SET" position on the circuit board.

To increase a brew volume, place the ON/OFF switch in the "ON" position, press and hold the START switch until three clicks are heard. Release the switch and press it again one or more times. (Failure to release the switch within two seconds after the third click causes the volume setting to be aborted and previous volume setting will remain in memory) Each time the switch is pressed, two seconds are added to the brew time period. Allow the brew cycle to finish in order to verify that the desired volume has been achieved.

To decrease a brew volume, place the ON/OFF switch in the "ON" position, press and release the START switch once for every two-second interval to be removed from the total brew time period; then immediately press and hold down the START switch until three clicks are heard. Release the switch. (Failure to release the switch within two seconds after the third click causes the volume setting to be aborted and previous volume setting will remain in memory). Allow the brew cycle to finish in order to verify that the desired volume has been achieved.

2. **Setting brew volumes.** To set a brew volume, first check that the SET/LOCK switch is in the "SET" position on the circuit board. Place the ON/OFF switch in the "ON" position, press and hold the START switch until three distinct clicks are heard and then release the switch. (Failure to release the switch within two seconds after the third click causes the volume setting to be aborted and previous volume setting will remain in memory.

View the level of the liquid being dispensed. When the desired level is reached, turn the ON/OFF switch to "OFF".

NOTE: Several ounces of water will continue to syphon from the tank after turning the switch "OFF". The brewer remembers this volume and will continue to brew batches of this size until the volume setting procedure is repeated.

NOTE: When brewing coffee, volume will decrease due to absorption by the coffee grounds.

3. **Setting programming disable feature.** If it becomes necessary to prevent anyone from changing brew time once programmed, you can set the SET/LOCK switch to the "LOCK" position. This will prevent any further programming until switch is once again put into the "SET" position.

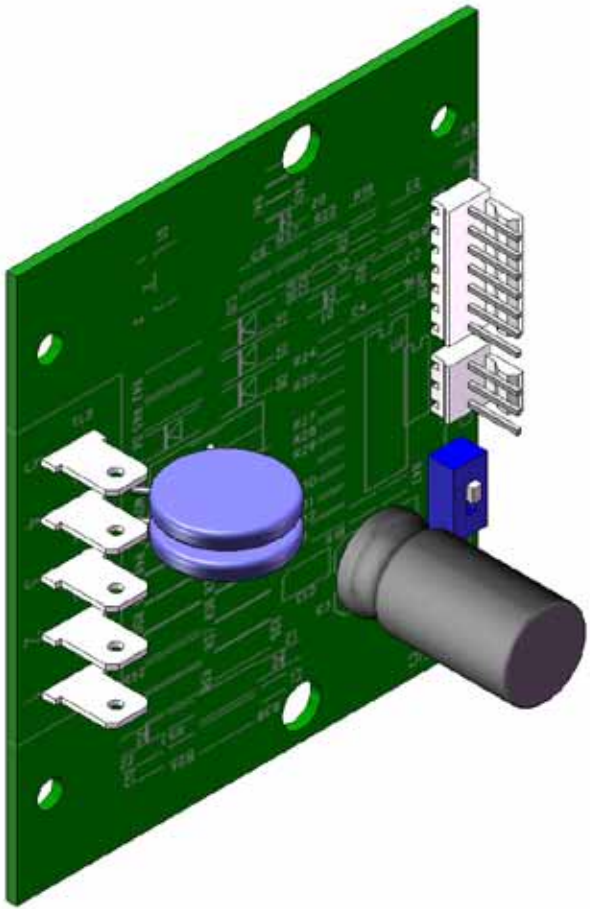

BLU wire to TL5 from start switch
WHI/GRN wire to TL4 from solenoid
WHI/BLU wire to TL3 from solenoid
WHI wire to TL2 from N/L2
WHI/RED wire to TL1 from on/off switch

FIG. 27-1 DIGITAL TIMER WIRING

SERVICE (cont.)

WARMER ELEMENT(S)

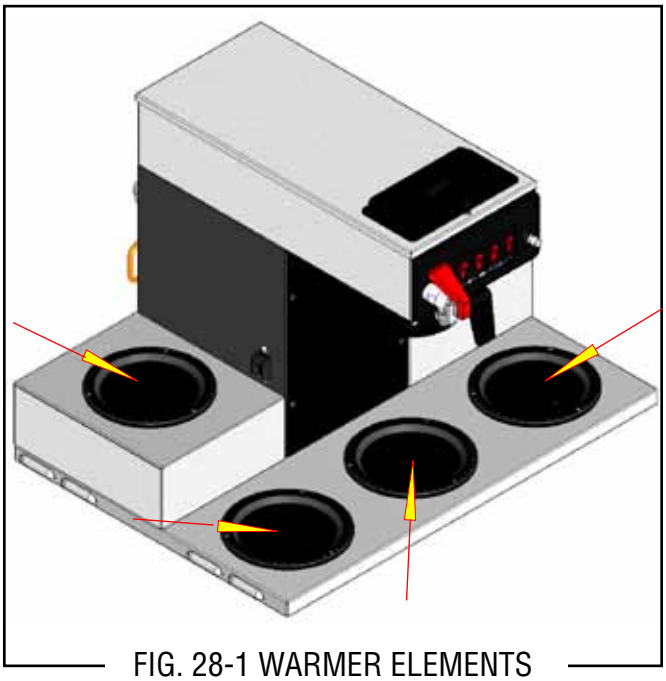

FIG. 28-1 WARMER ELEMENTS

Location:

The warmer element(s) is located under the warmer plate.

Test Procedures:

1. Disconnect the brewer from the power source.
2. With a voltmeter, check voltage across the two wires at the warmer element with the "ON/OFF" switch in the "ON" position. Connect the brewer to the power source. The indication must be 120 volts ac for two wire 120 volt models and three wire 120/208 and 120/240 volt models, or 230 volts ac for two wire 230 volt models.
3. Disconnect the brewer from the power source.

If voltage is present as described, proceed to #4.
If voltage is not present as described, refer to Wiring Diagrams and check wiring harness.

WARMER	RESISTANCE
100W-120V	132 Ω - 152 Ω
100W-220V	450 Ω - 532 Ω
100W-200V	372 Ω - 432 Ω
TERMINAL TO SHEATH - INFINITE (OPEN)	

FIG. 28-2 WARMER ELEMENTS

4. Check the resistance across the two terminals on the warmer element. NOTE: There should be no resistance reading between the heater sheath and either terminal. Refer to the following chart.

If resistance is to specification, reconnect the two wires to the warmer element.
If resistance is not to specification, replace the warmer element.

Removal and Replacement:

1. Remove the three #4-40 screws securing the warmer assembly to the brewer.
2. Lift the warmer assembly from the brewer.
3. Disconnect the two wires from the warmer element terminals.
4. Remove the two #8-32 nuts securing the warmer element to the warmer plate.
5. Securely install new warmer element.
6. Reconnect the two wires to warmer element terminals.
7. Securely install warmer assembly on the brewer.

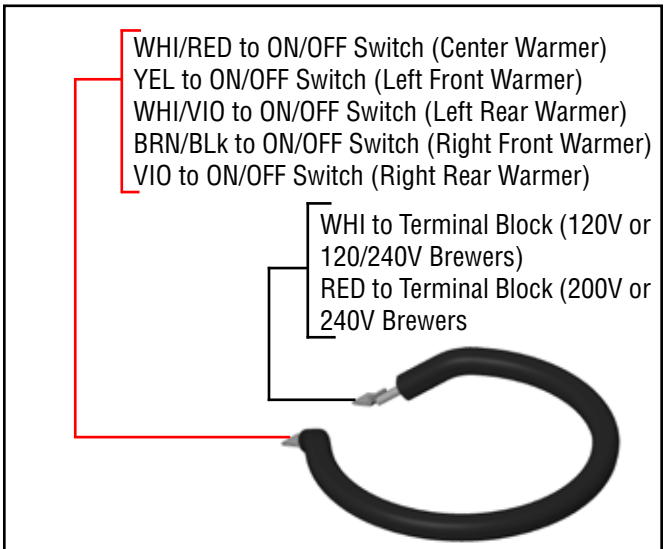

FIG. 28-3 WARMER ELEMENT TERMINALS

SCHEMATIC WIRING DIAGRAM
CRT5, & CRTF5

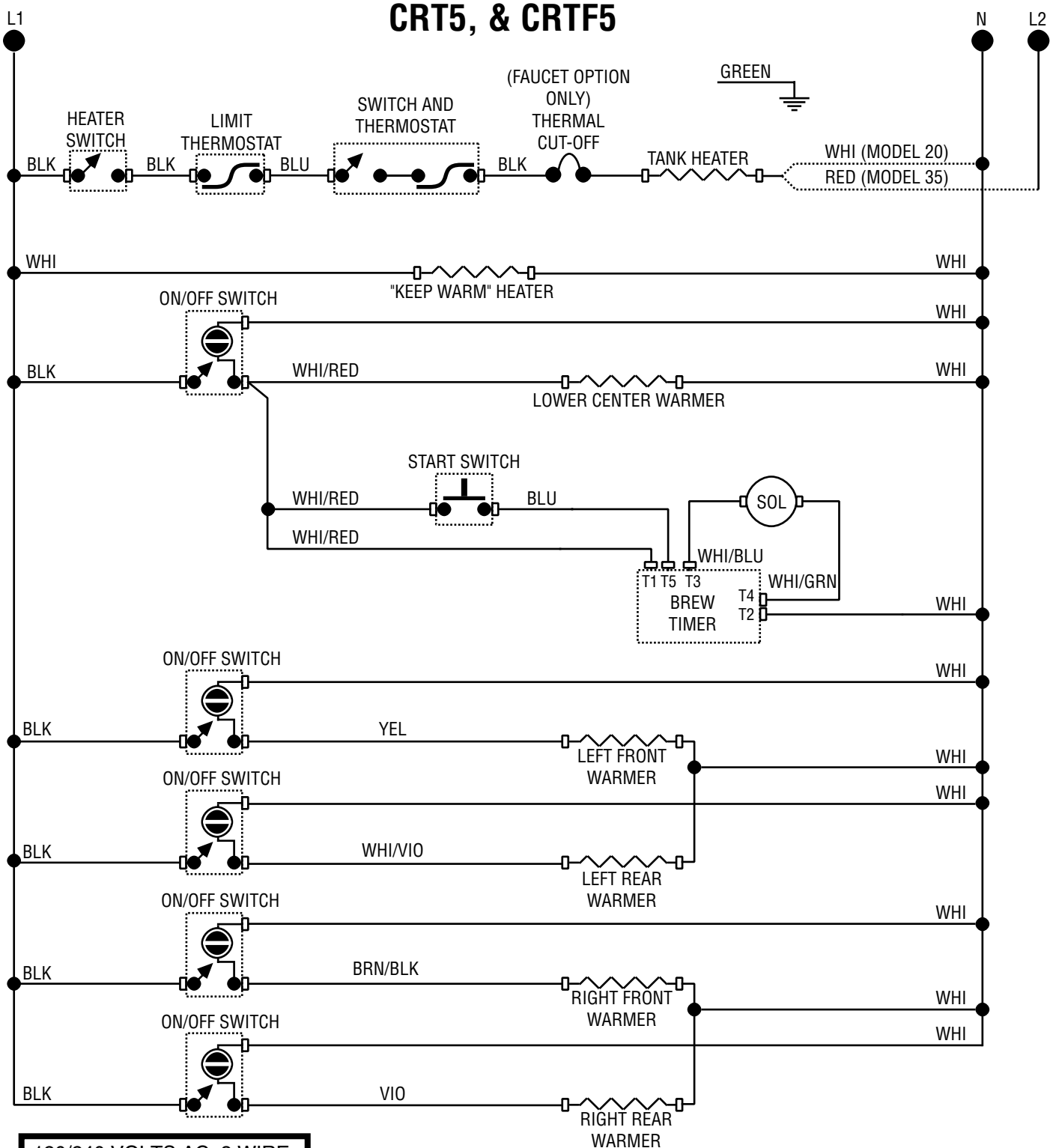

120/240 VOLTS AC 3 WIRE
120 VOLTS AC 2 WIRE
SINGLE PHASE

10476.0000G 07/03 © 1990 BUNN-O-MATIC CORPORATION

SCHEMATIC WIRING DIAGRAM
CRT5A, & CRTF5A

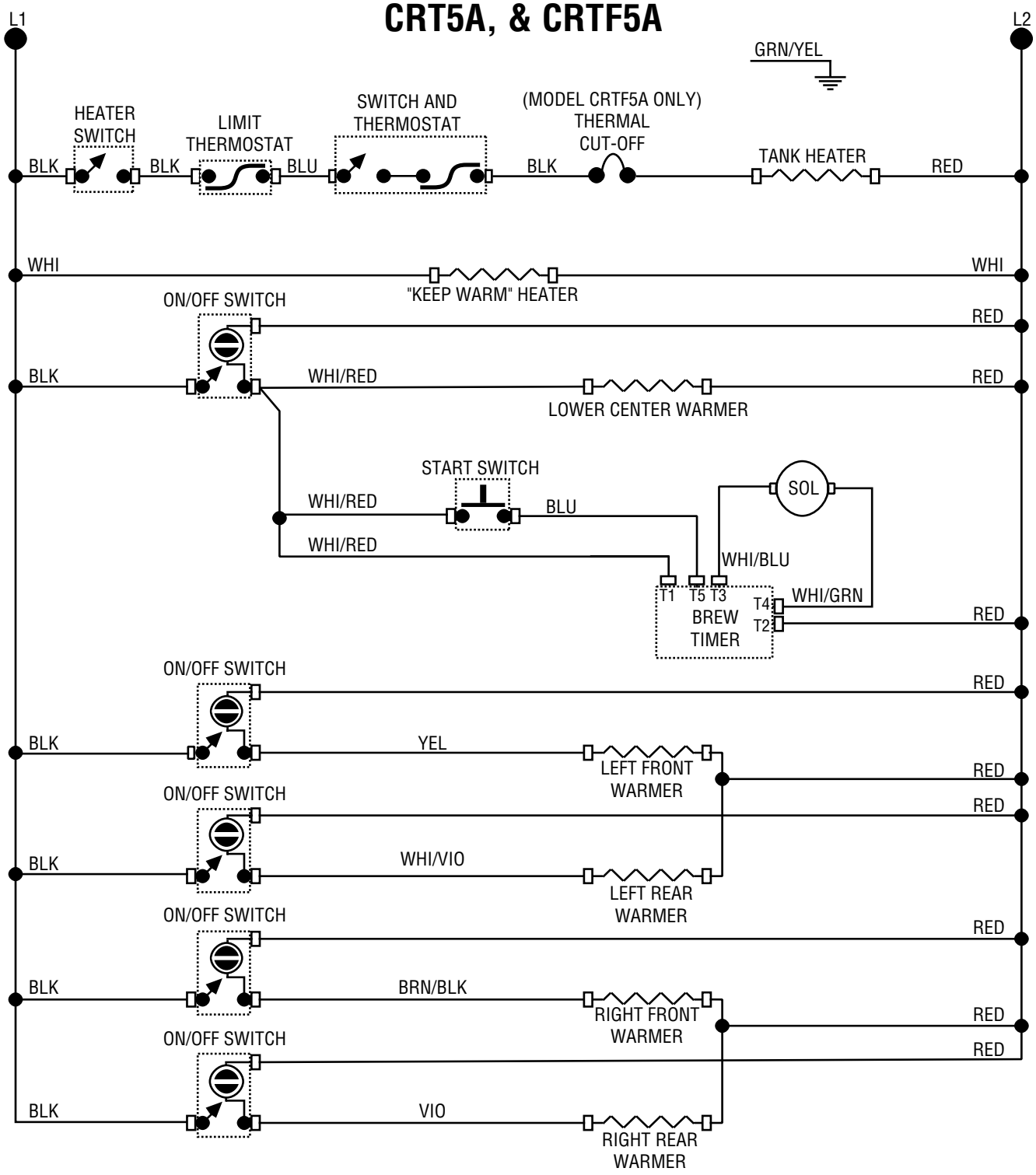

240 VOLTS AC 2 WIRE
SINGLE PHASE

10477.0000H 07/03 © 1990 BUNN-O-MATIC CORPORATION

SCHEMATIC WIRING DIAGRAM
CRT5B, & CRTF5B

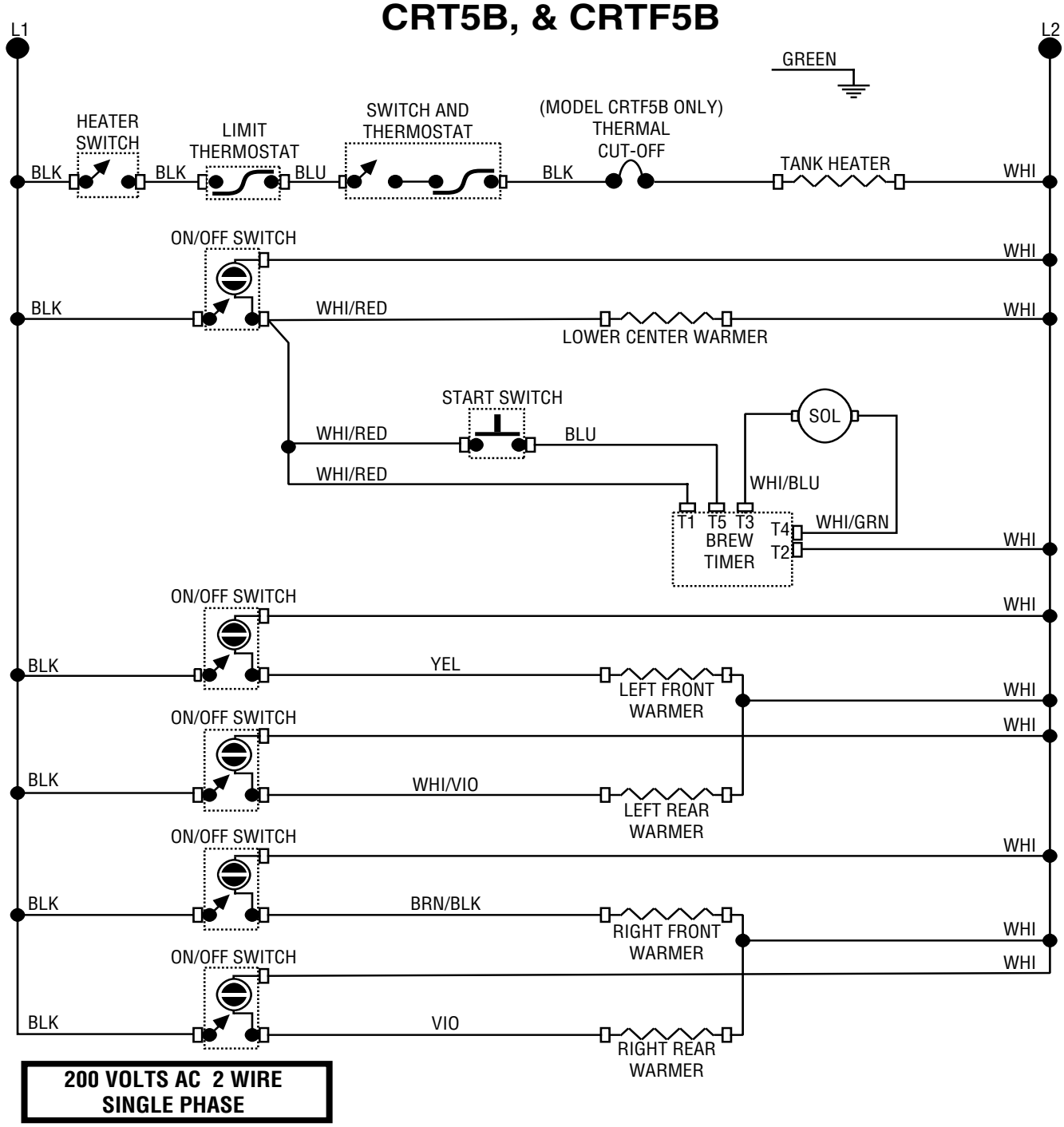

200 VOLTS AC 2 WIRE SINGLE PHASE

10477.0001H 07/03 © 1993 BUNN-O-MATIC CORPORATION

SCHEMATIC WIRING DIAGRAM
CW/CWT/CWTF - APS/TS/TSR/TC

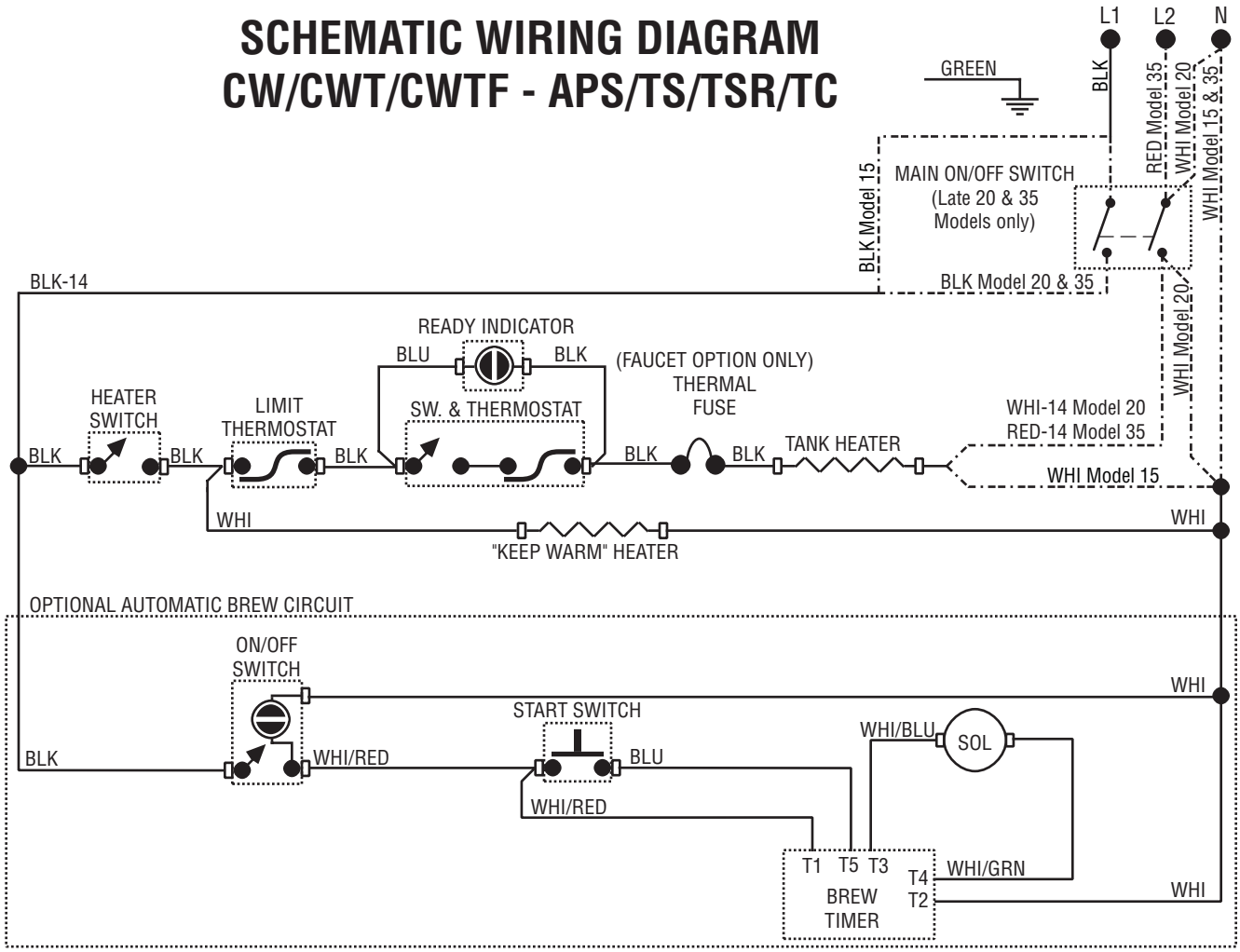

120/240 VOLTS AC 3 WIRE
120 VOLTS AC 2 WIRE
SINGLE PHASE

10693.0000G 02/07 © 1993 BUNN-O-MATIC CORPORATION

SCHEMATIC WIRING DIAGRAM CW-TS & CW-APS ERT

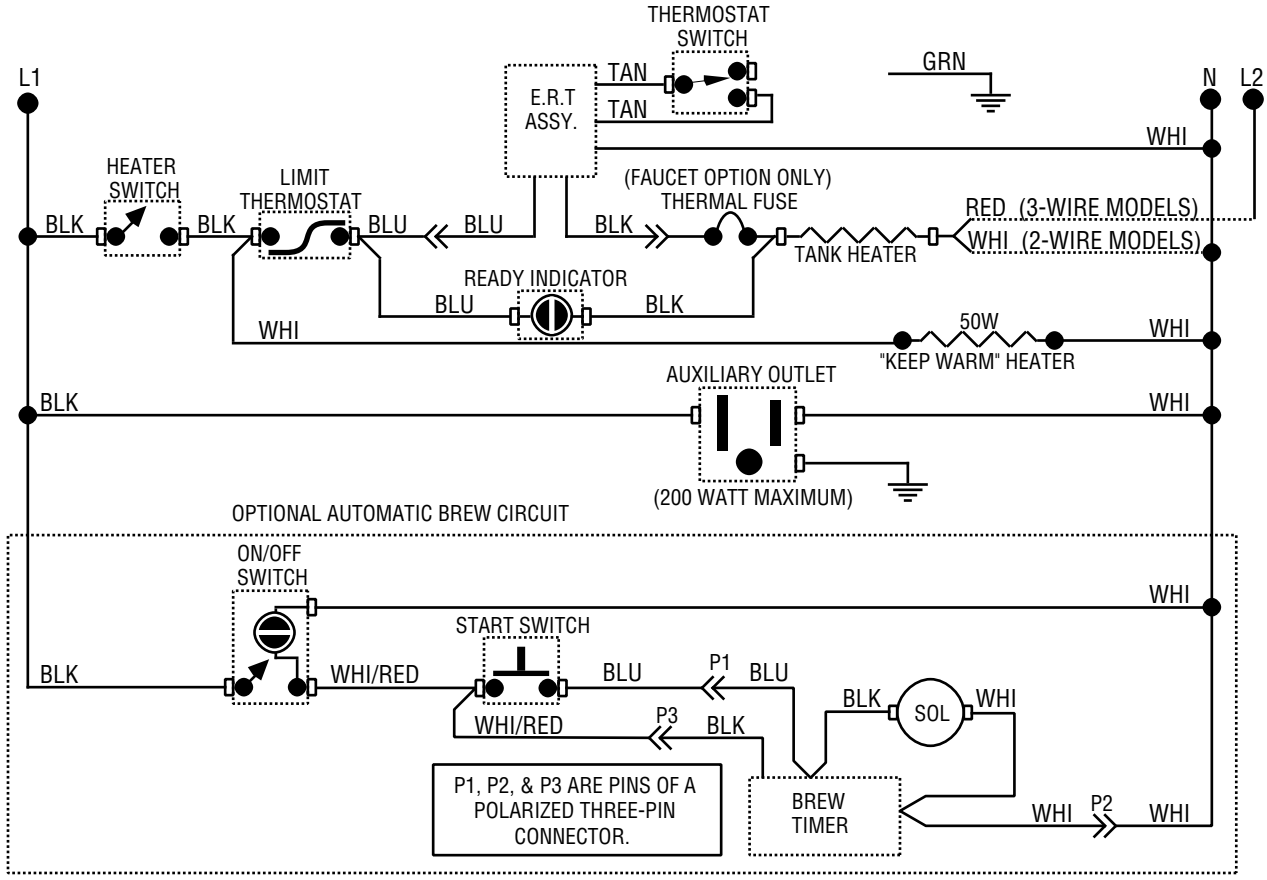

120/240 VOLTS AC 3 WIRE
120 VOLTS AC 2 WIRE
SINGLE PHASE

10693.0001C 9/96 © 1996 BUNN-O-MATIC CORPORATION

SCHEMATIC WIRING DIAGRAM FOR CWT-APS MV, CWTF-APS MV, CWTF-TS MV, CWTF-TSR MV

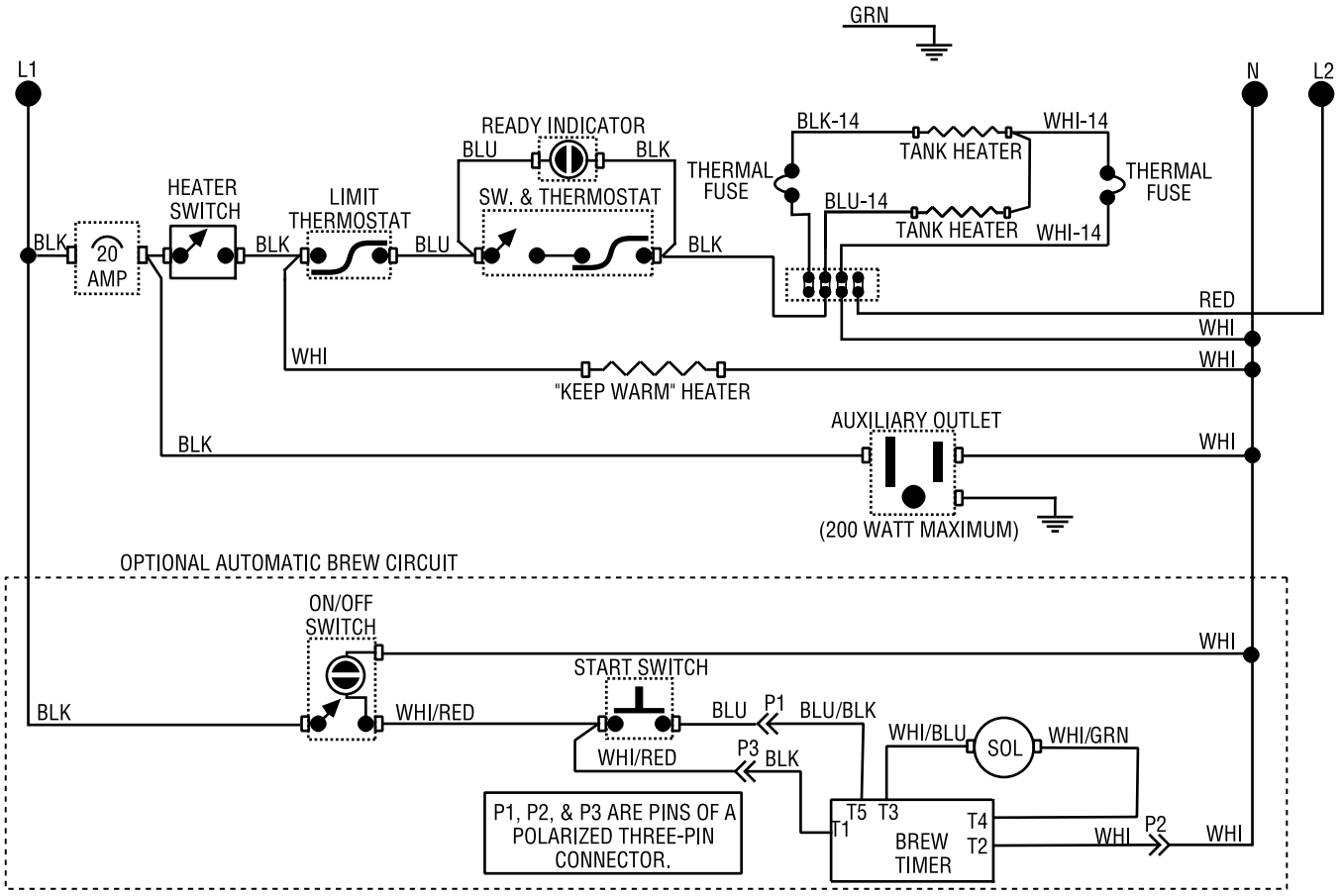

120/208 VOLTS AC 3 WIRE
120/240 VOLTS AC 3 WIRE
120 VOLTS AC 2 WIRE
SINGLE PHASE

10693.0002E 8/00 © 1998 BUNN-O-MATIC CORPORATION

SCHEMATIC WIRING DIAGRAM FOR MODELS CWA, CWTA, CWTFA - APS, TS, TSR

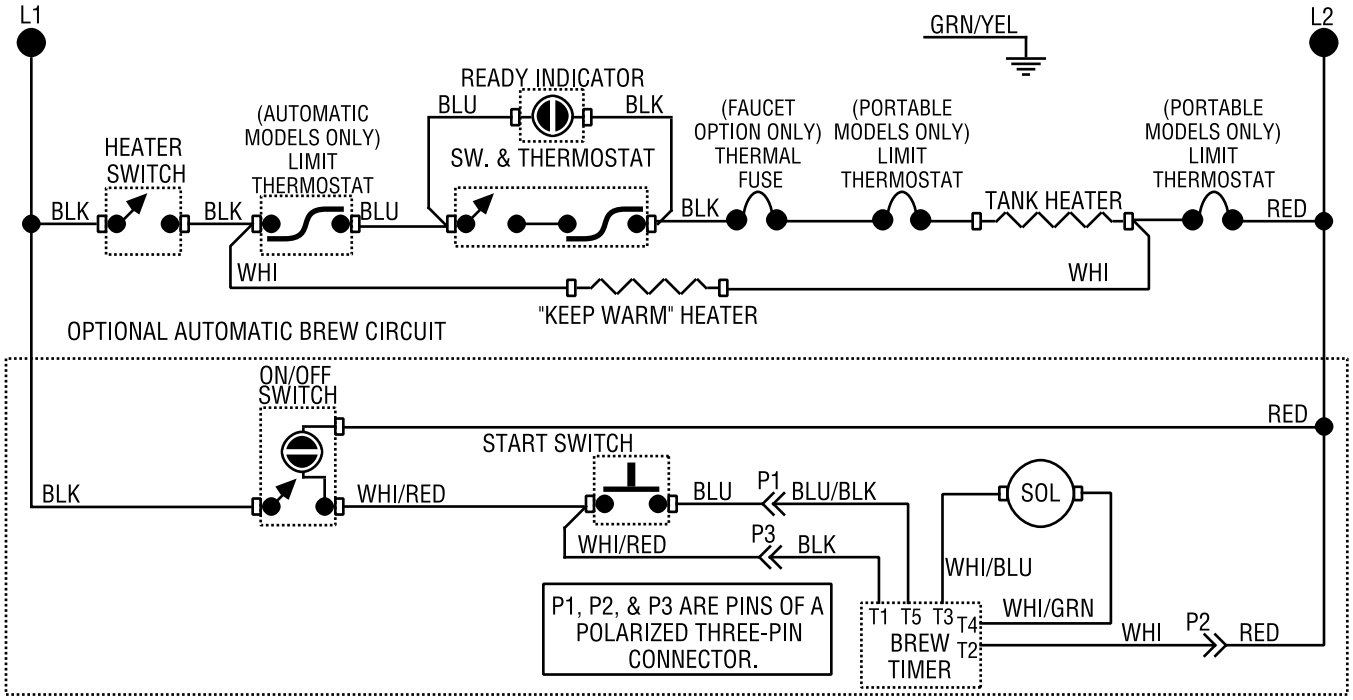

220-240 VOLTS AC 2 WIRE SINGLE PHASE

10694.0000C 6/00 © 1994 BUNN-O-MATIC CORPORATION

SCHEMATIC WIRING DIAGRAM CWTF-TSR

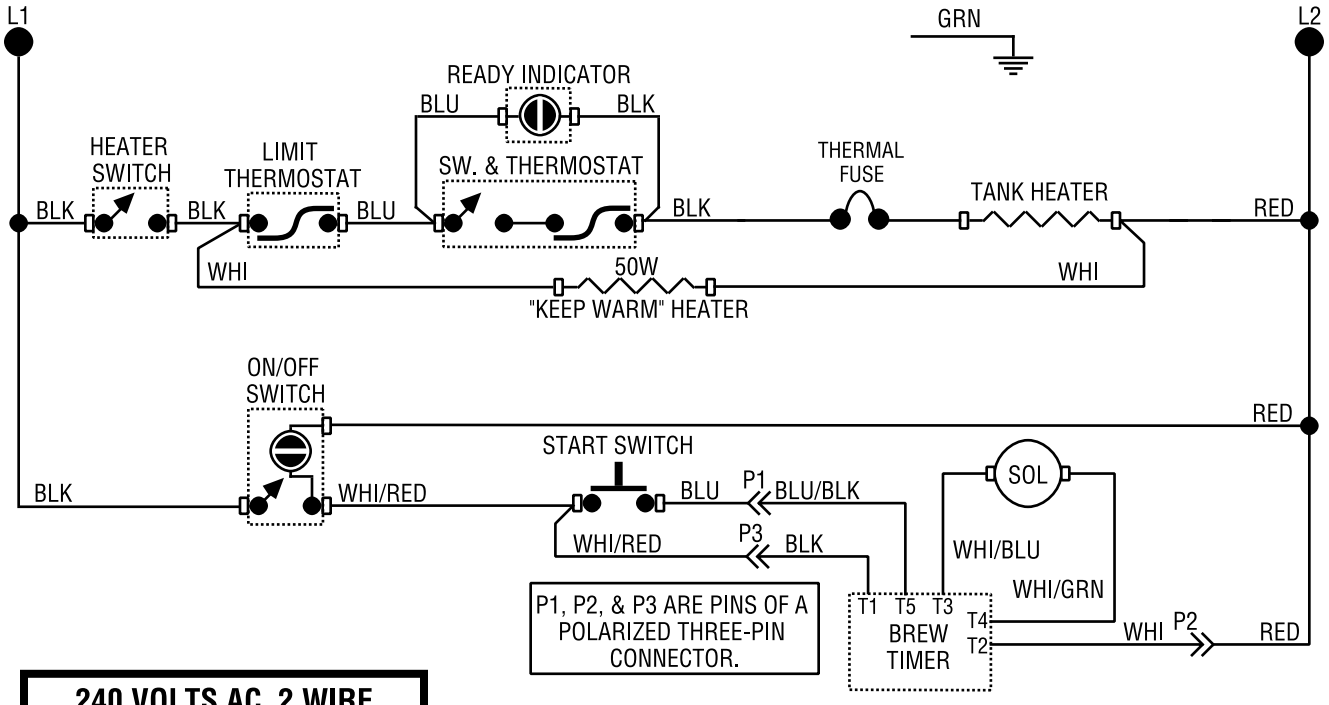

240 VOLTS AC 2 WIRE SINGLE PHASE

10694.0001C 6/00 © 1996 BUNN-O-MATIC CORPORATION

SCHEMATIC WIRING DIAGRAM FOR MODELS CWA, CWTA, CWTFA - APS, TS

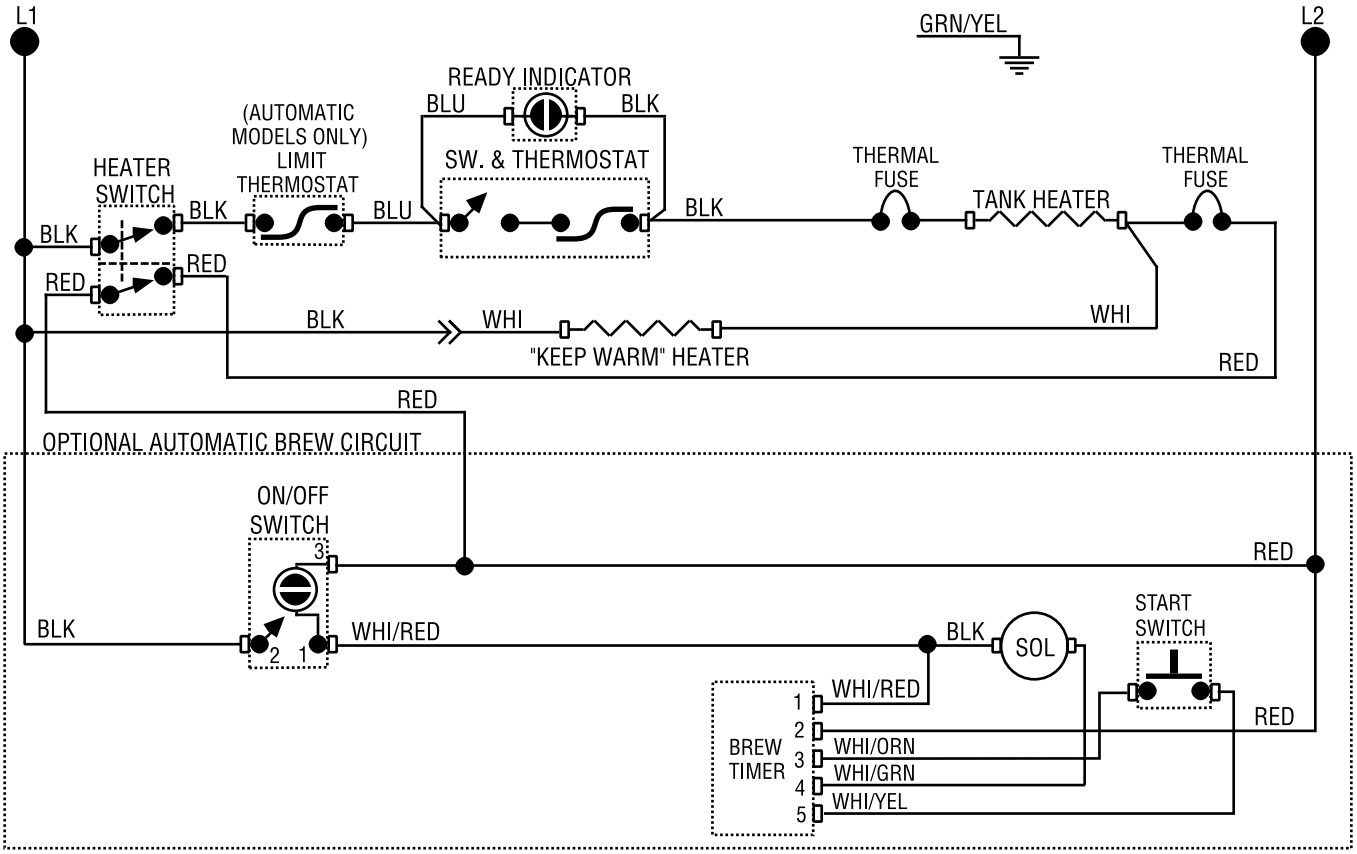

230-240 VOLTS AC 2 WIRE SINGLE PHASE

10694.0002E 7/98 © 1997 BUNN-O-MATIC CORPORATION

SCHEMATIC WIRING DIAGRAM FOR CWB, CWTB, CWTFB - APS,TS,TSR

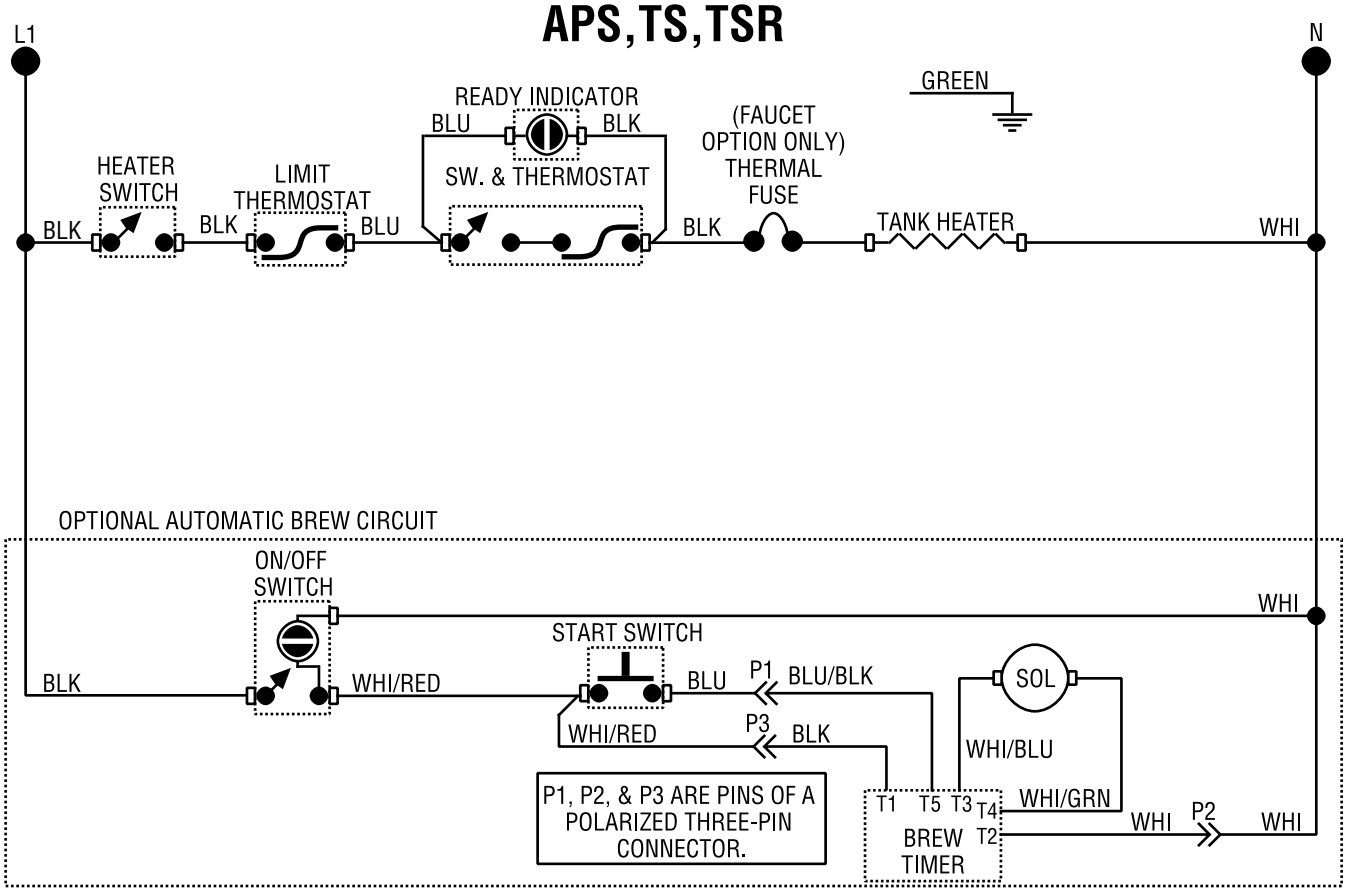

100 VOLTS AC 2 WIRE SINGLE PHASE

10695.0000C 6/00 © 1996 BUNN-O-MATIC CORPORATION

SCHEMATIC WIRING DIAGRAM FOR CWB, CWTB, CWTFB - APS,TS,TSR

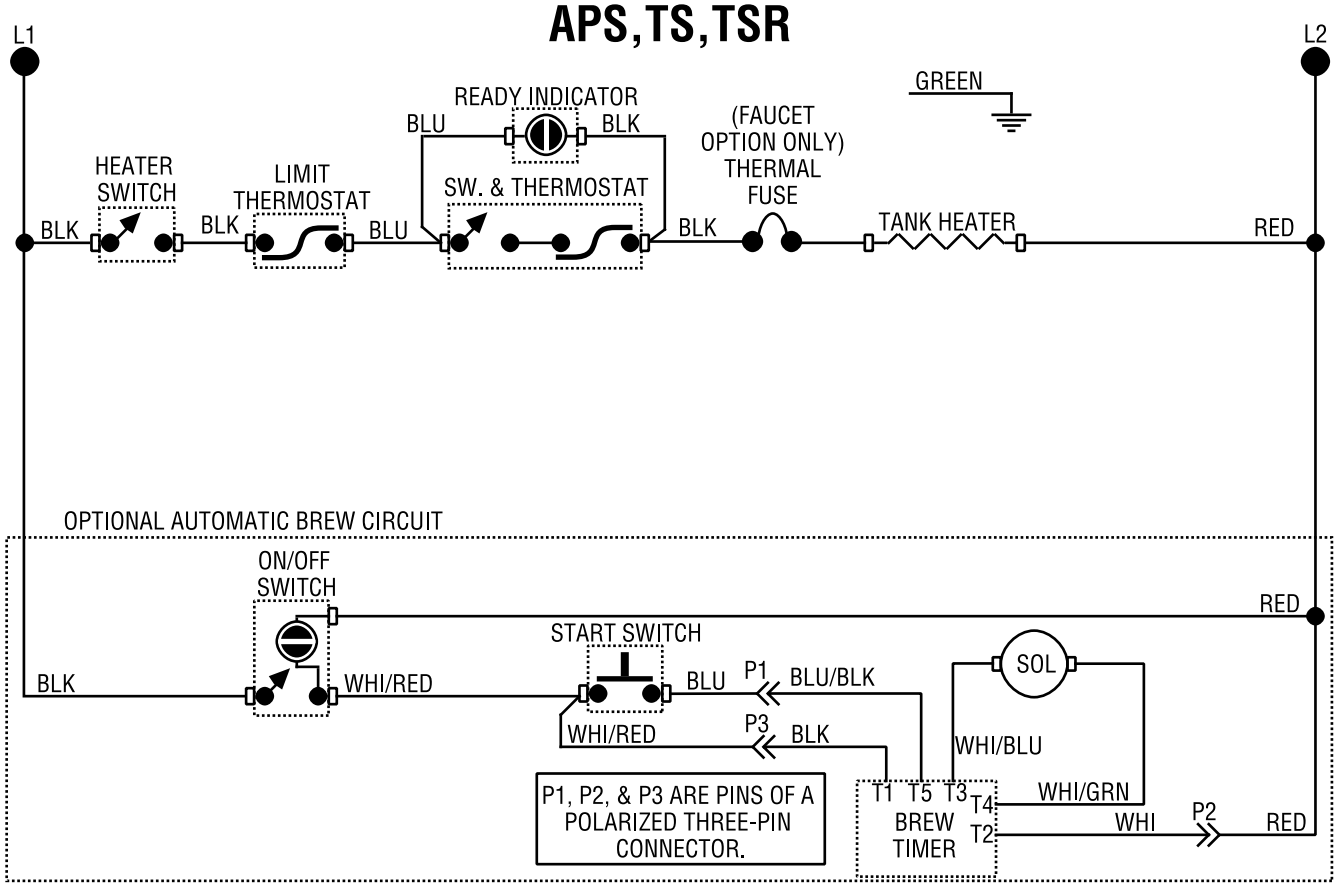

200 VOLTS AC 2 WIRE SINGLE PHASE

10696.0000B 6/00 © 1996 BUNN-O-MATIC CORPORATION

SCHEMATIC WIRING DIAGRAM
CWT/CWTF TWIN 0/2, 2/2, 4/2 & CWT TWIN-APS

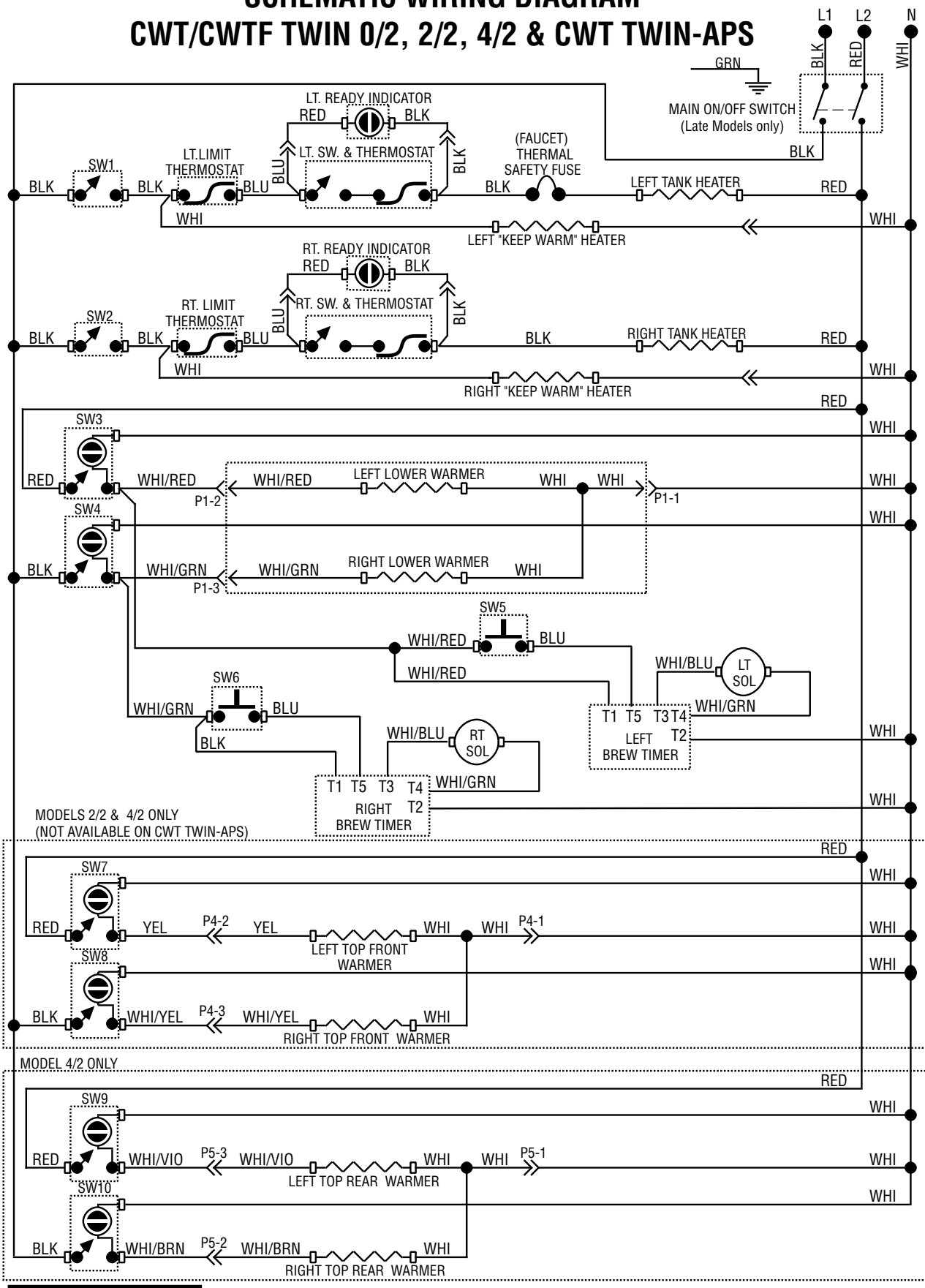

120/240 VOLTS AC
3 WIRE + GND
SINGLE PHASE

10736.0000L 03/07 © 1993 BUNN-O-MATIC CORPORATION

SCHEMATIC WIRING DIAGRAM
CWT/CWTF TWIN 0/2, 2/2, 4/2 & CWT TWIN-APS

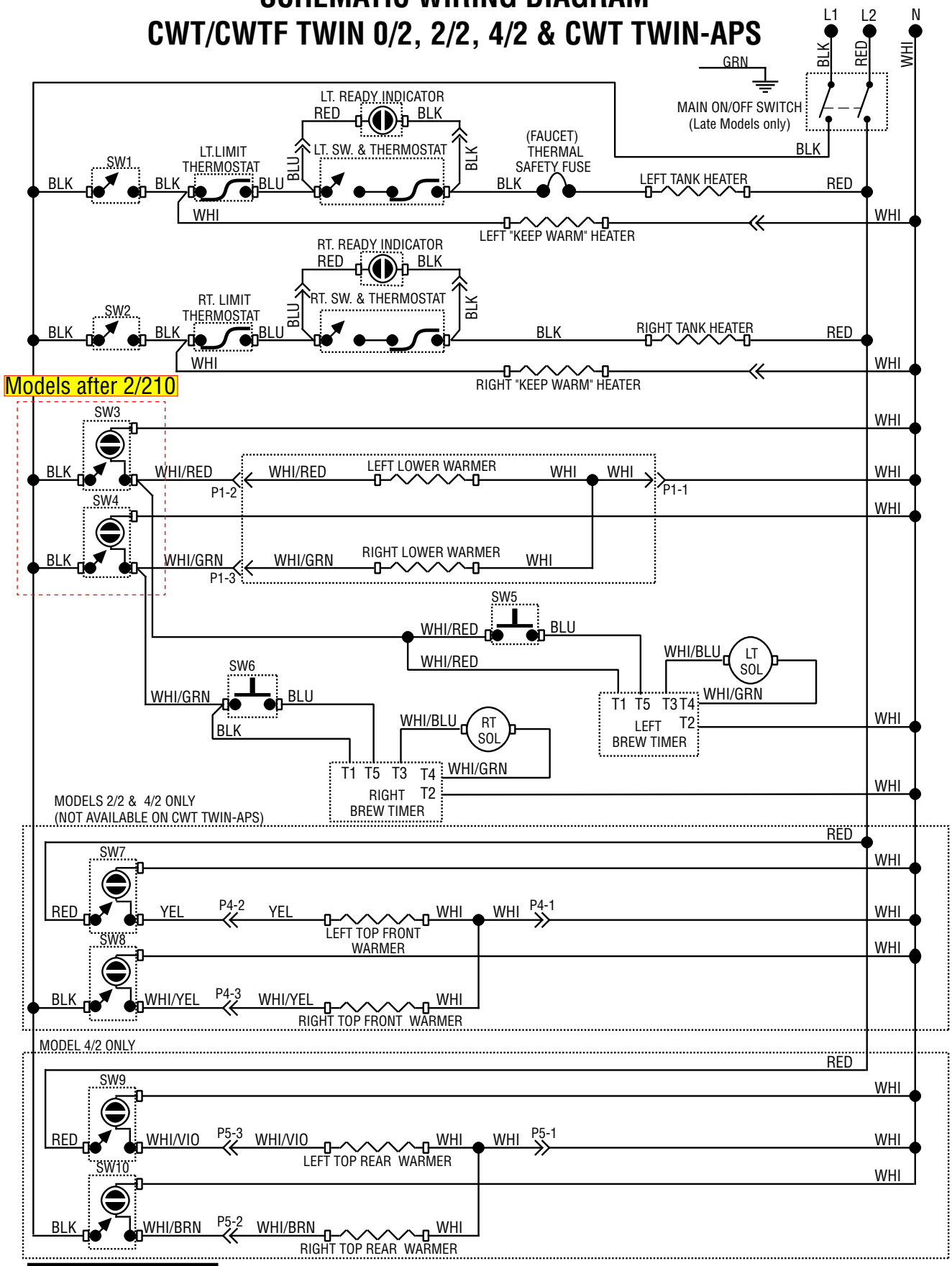

120/240 VOLTS AC
3 WIRE + GND
SINGLE PHASE

10736.0000M 01/10 © 1993 BUNN-O-MATIC CORPORATION

41711.1 020410

SCHEMATIC WIRING DIAGRAM CWTFA
TWIN 2/2 & 4/2

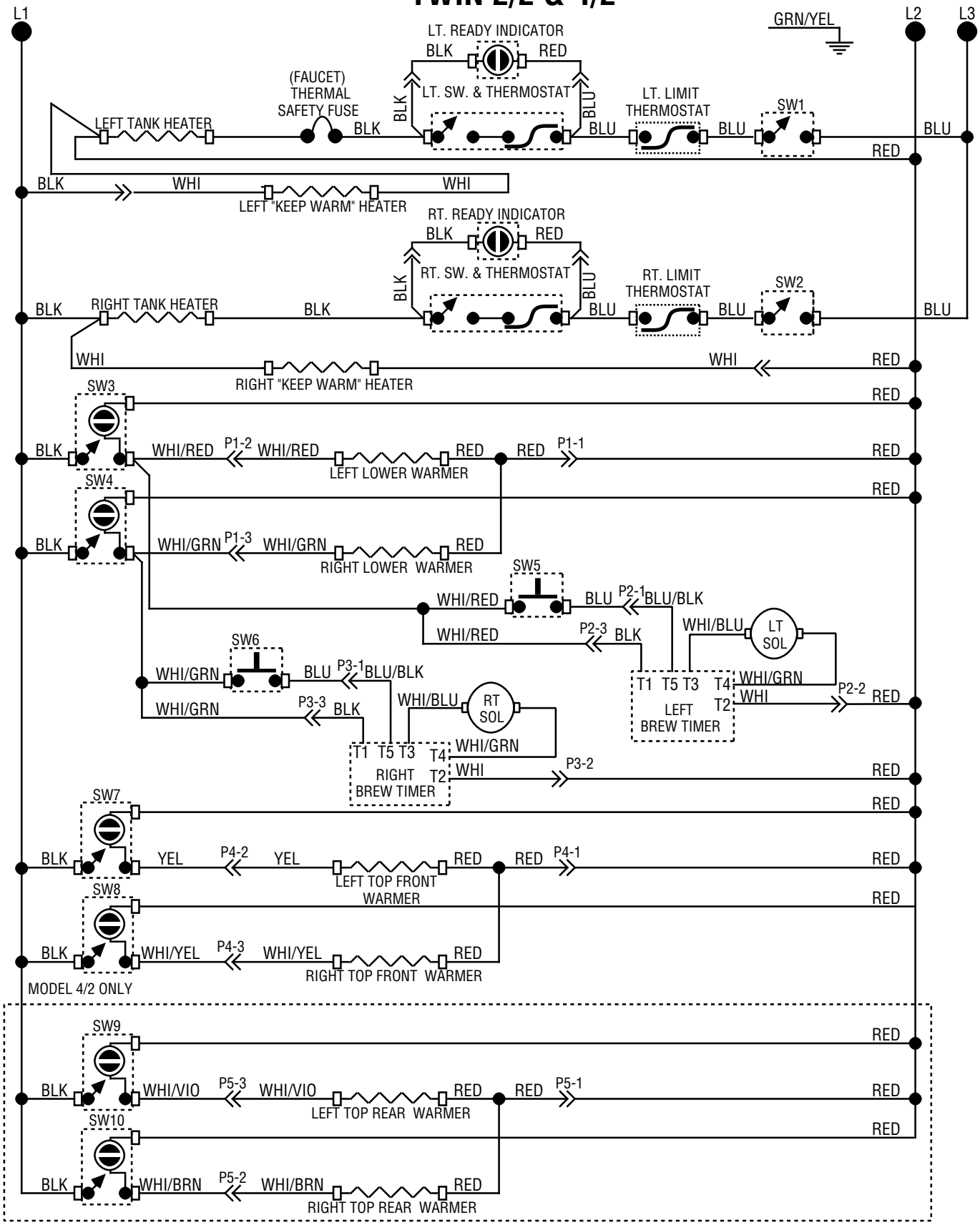

230 VOLTS AC 3 WIRE
THREE PHASE

10736.0001G 12/00 © 1993 BUNN-O-MATIC CORPORATION

SCHEMATIC WIRING DIAGRAM
CWTFA & CWTFB TWIN 2/2 & 4/2

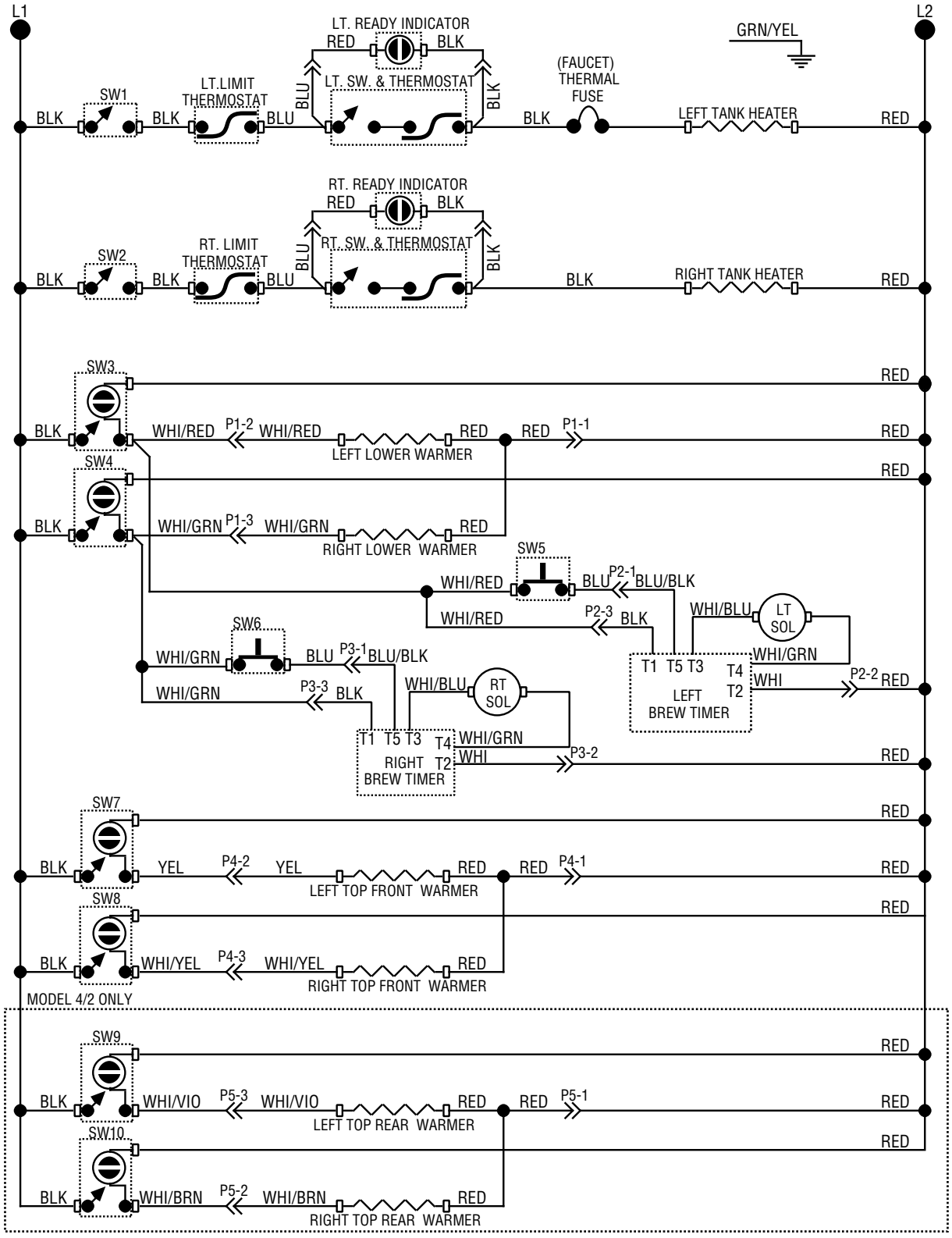

200 OR 240 VOLTS AC 2 WIRE SINGLE PHASE

10736.0002J 12/00 © 1993 BUNN-O-MATIC CORPORATION

SCHEMATIC WIRING DIAGRAM

CWTFA 2/2 TWIN, CWTFA 4/2 TWIN & CWTFA TWIN-APS

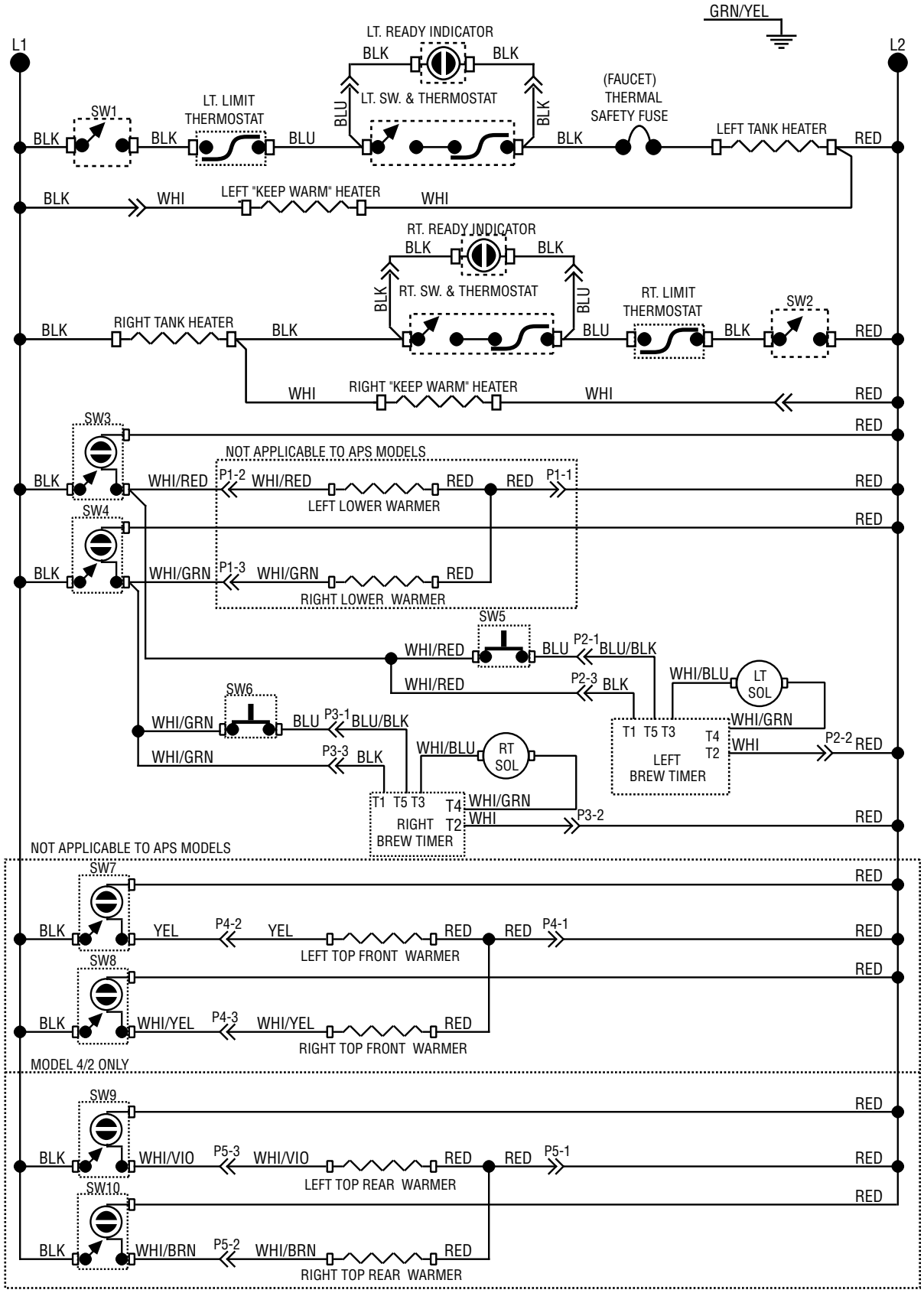

230 VOLTS AC 2 WIRE
SINGLE PHASE

10736.0004A 02/06 © 2006 BUNN-O-MATIC CORPORATION

SCHEMATIC WIRING DIAGRAM
CWTFA TWIN-APS CE

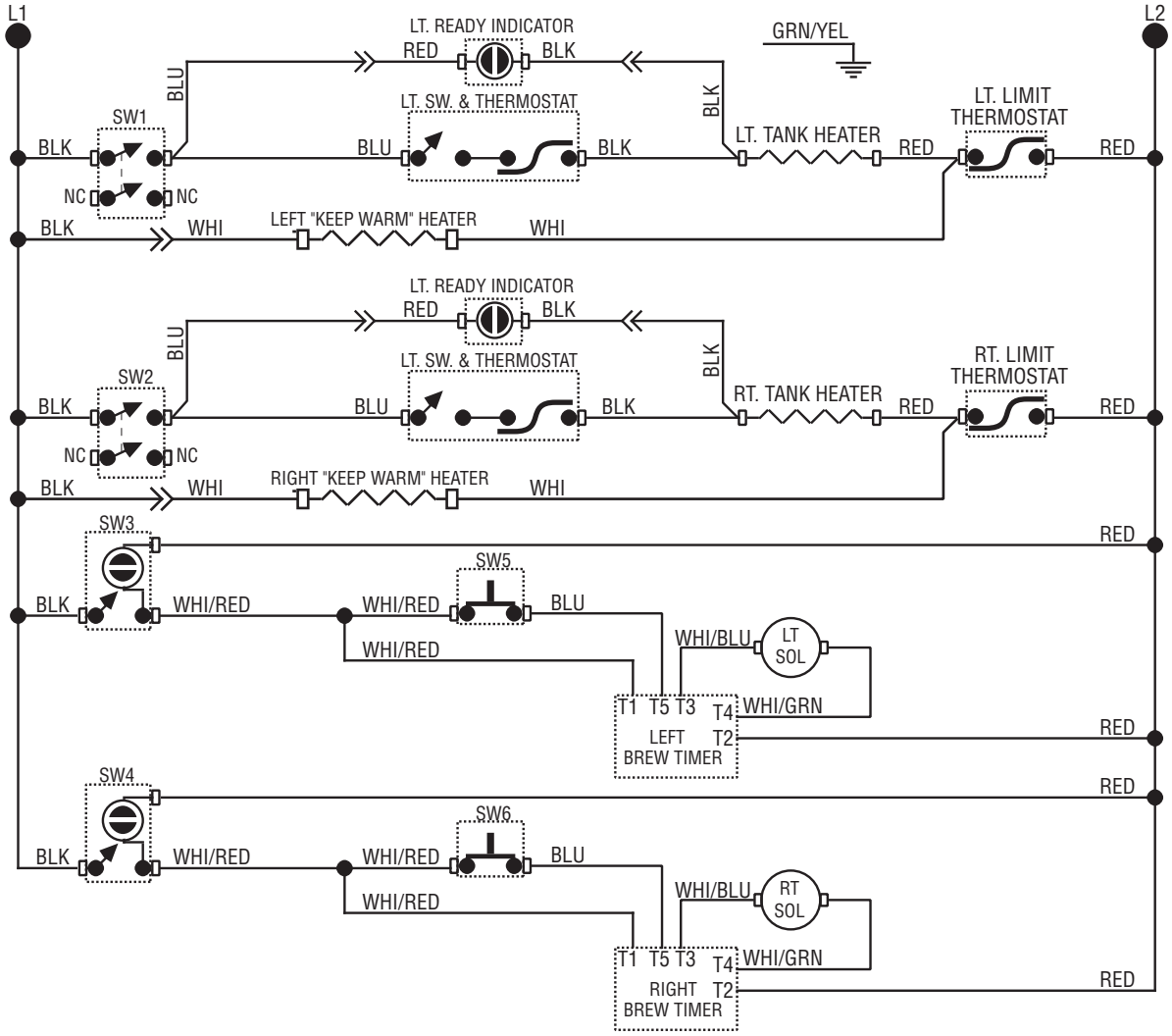

230 VOLTS AC
2 WIRE + GND
SINGLE PHASE

10736.0005B 08/07 © 2007 BUNN-O-MATIC CORPORATION

SCHEMATIC WIRING DIAGRAM CWTF TWIN 0/6

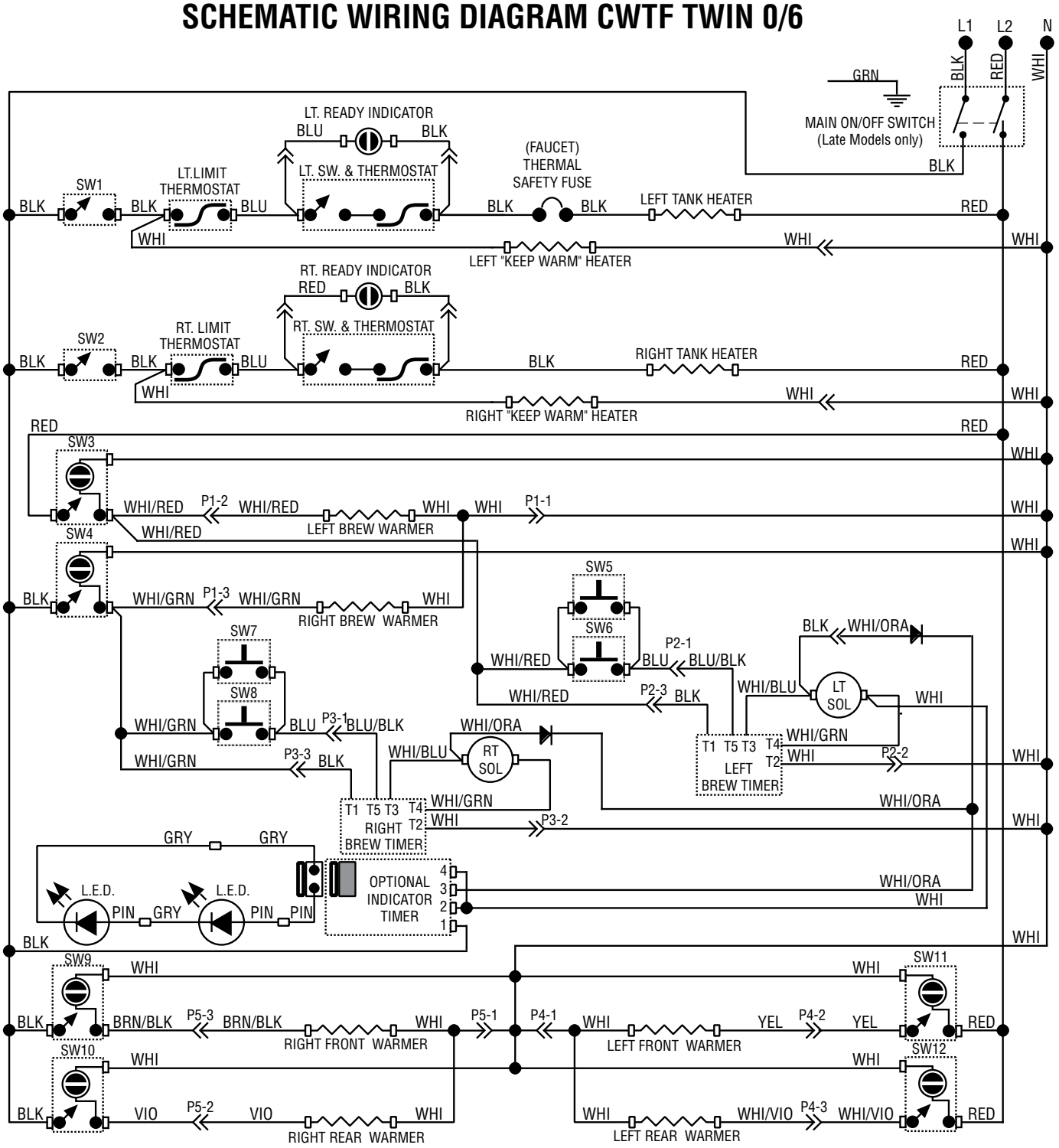

120/240 VOLTS AC
3 WIRE + GND
SINGLE PHASE

10741.0000H 01/07 © 1993 BUNN-O-MATIC CORPORATION

SCHEMATIC WIRING DIAGRAM C, CT & CWT

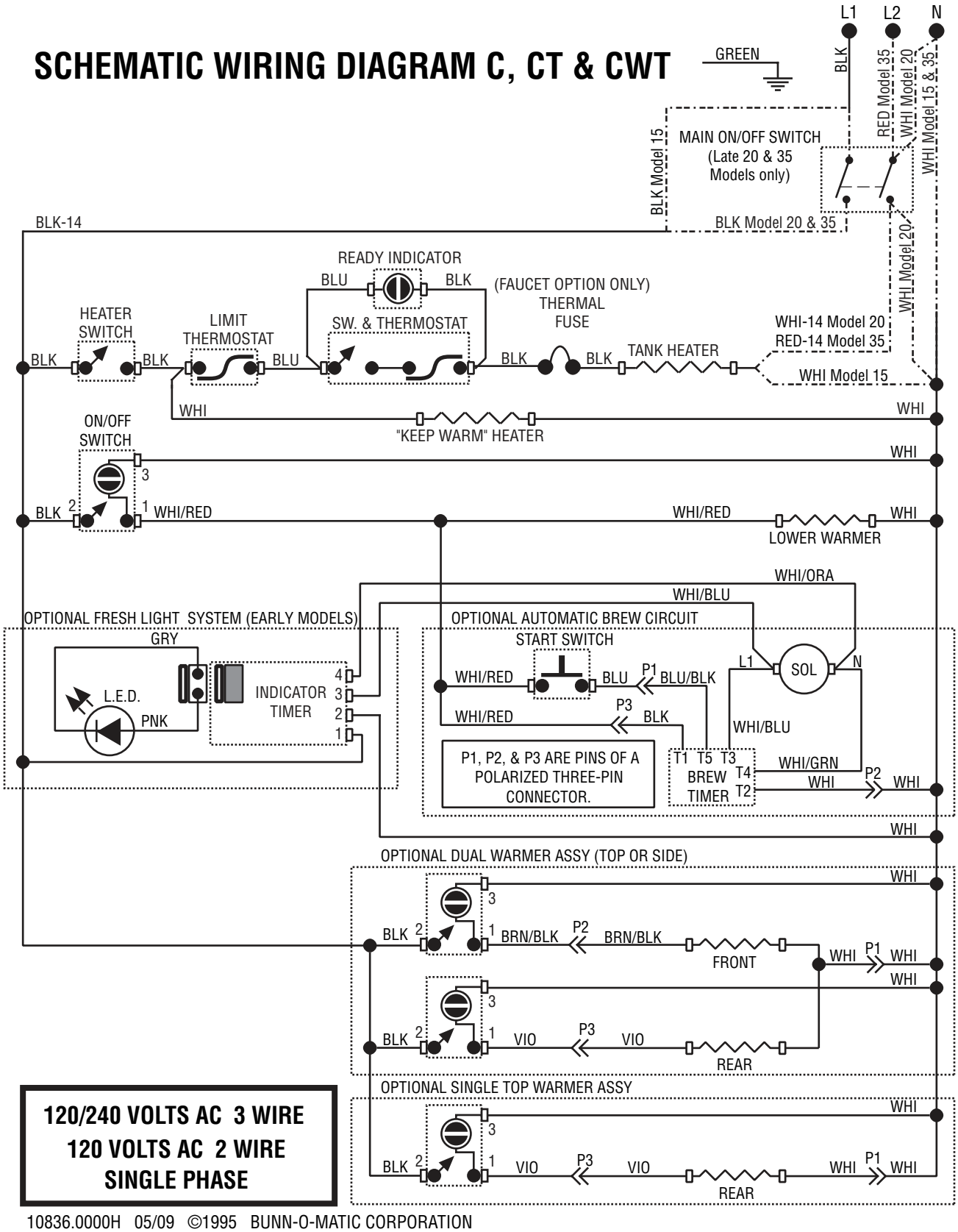

120/240 VOLTS AC 3 WIRE
120 VOLTS AC 2 WIRE
SINGLE PHASE

10836.0000H 05/09 ©1995 BUNN-O-MATIC CORPORATION

SCHEMATIC WIRING DIAGRAM CWTB

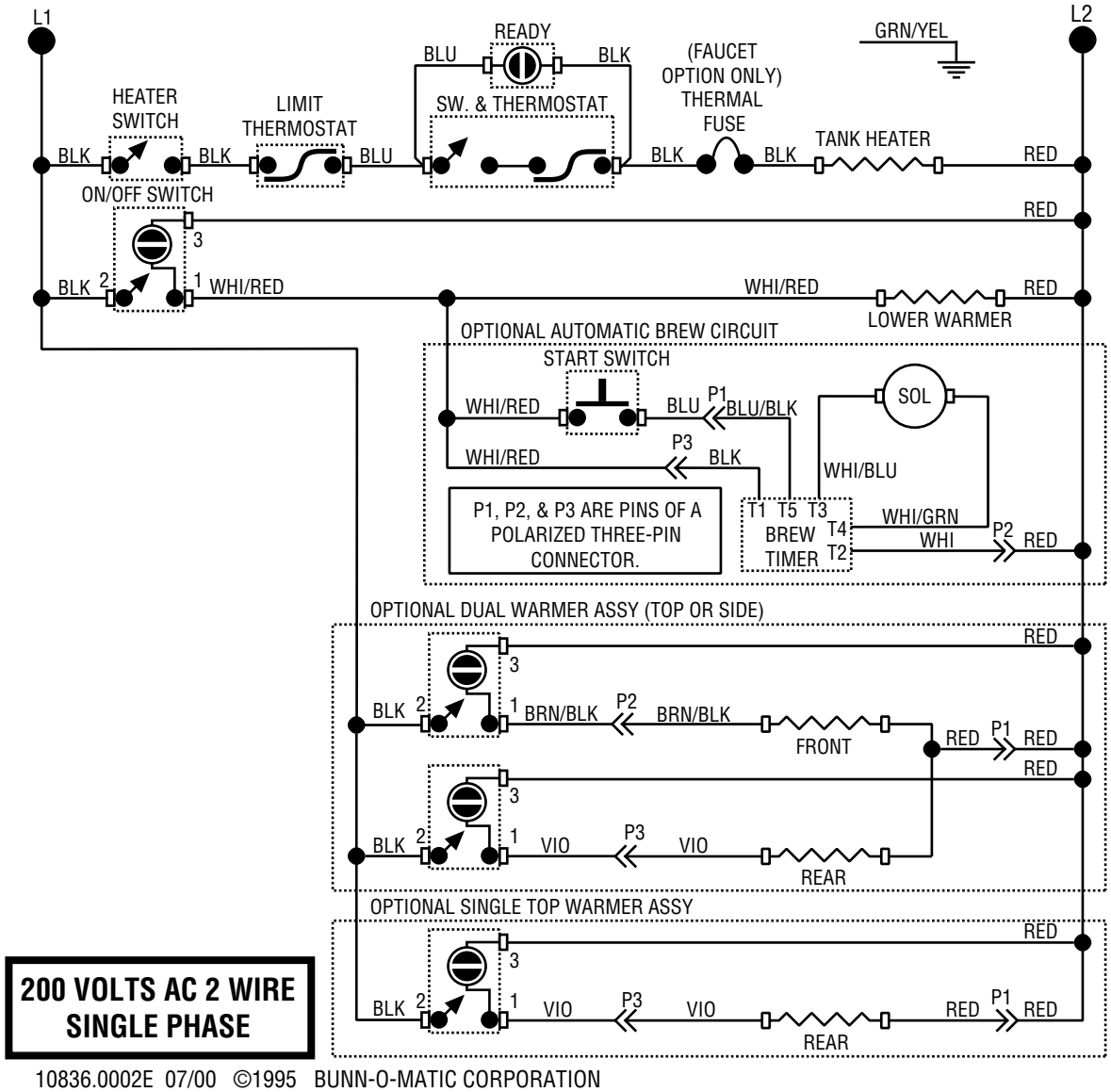

10836.0002E 07/00 ©1995 BUNN-O-MATIC CORPORATION

SCHEMATIC WIRING DIAGRAM CWTA

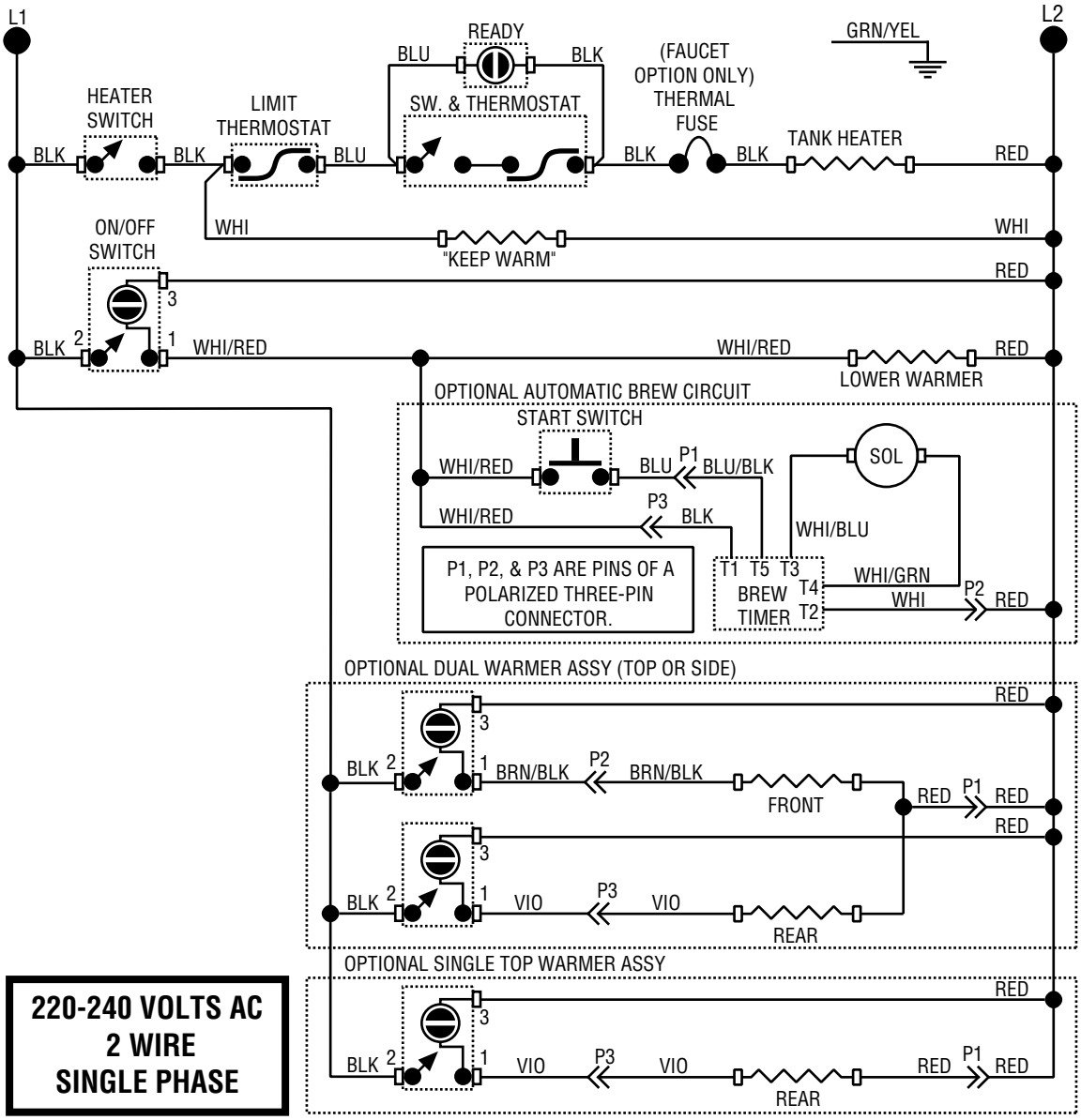

10836.0003E 07/00 ©1995 BUNN-O-MATIC CORPORATION

SCHEMATIC WIRING DIAGRAM CWTA - CE

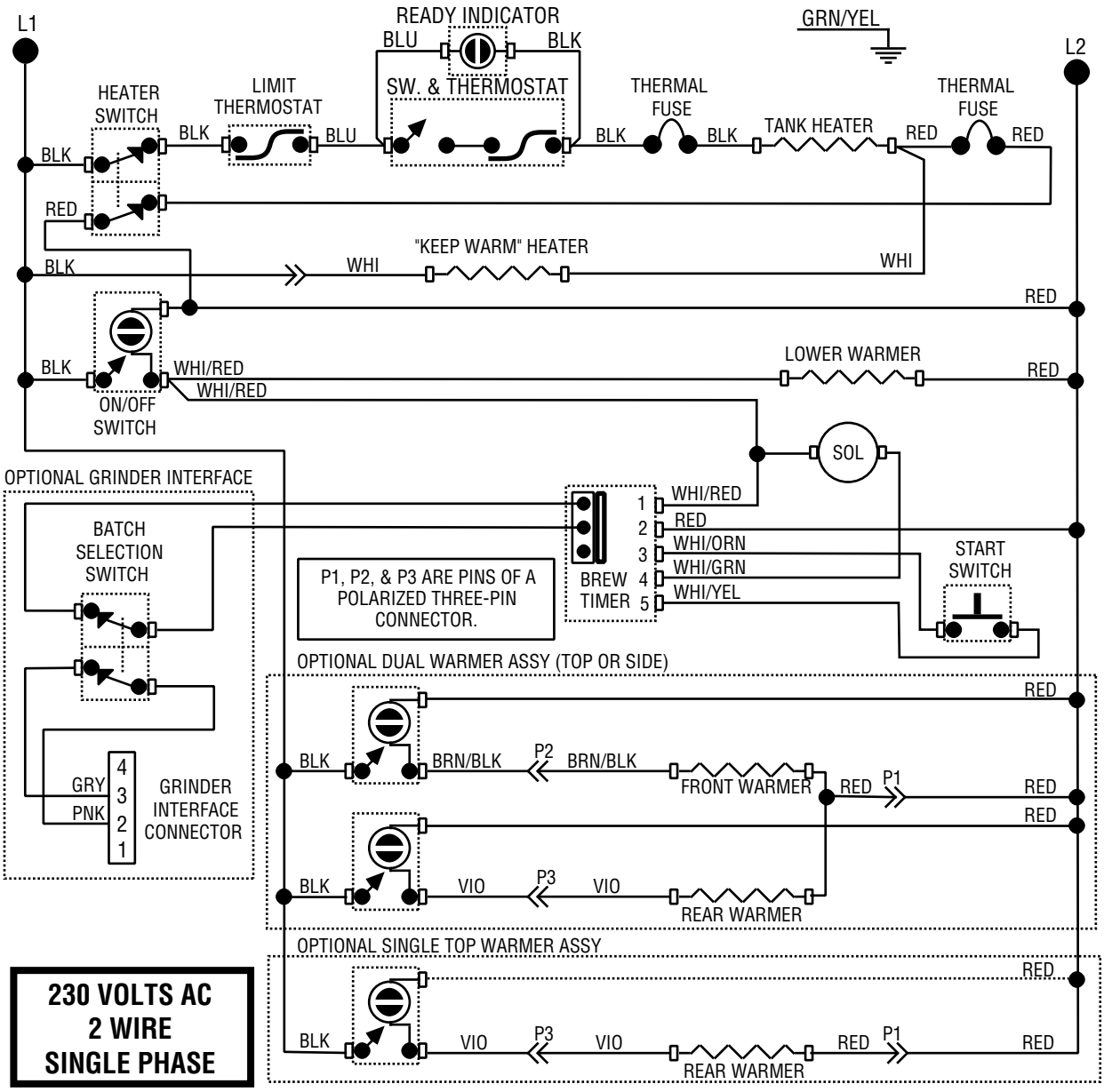

10836.0004H 10/02 ©1997 BUNN-O-MATIC CORPORATION

SCHEMATIC WIRING DIAGRAM C-MV, CT-MV, CTF-MV, CWT-MV & CWTF-MV

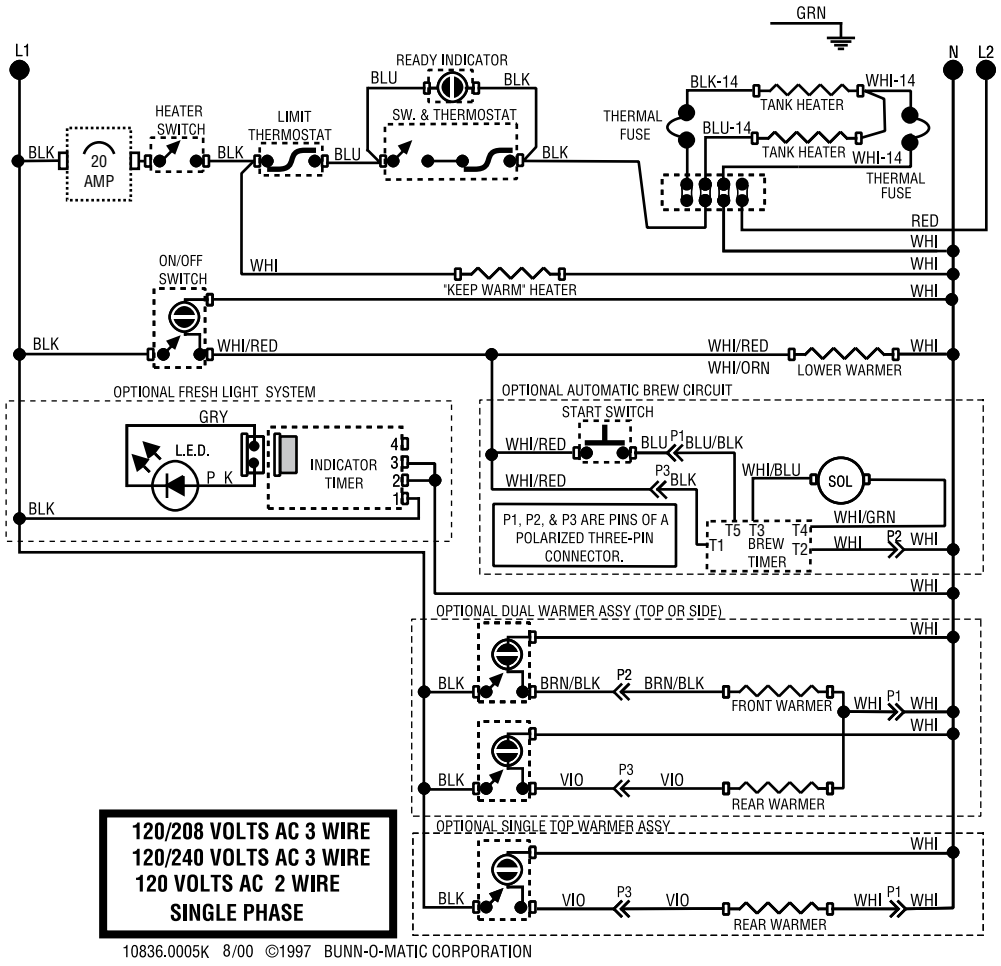

10836.0005K 8/00 ©1997 BUNN-O-MATIC CORPORATION

SCHEMATIC WIRING DIAGRAM
CWTF, CWTFB NO WARMER

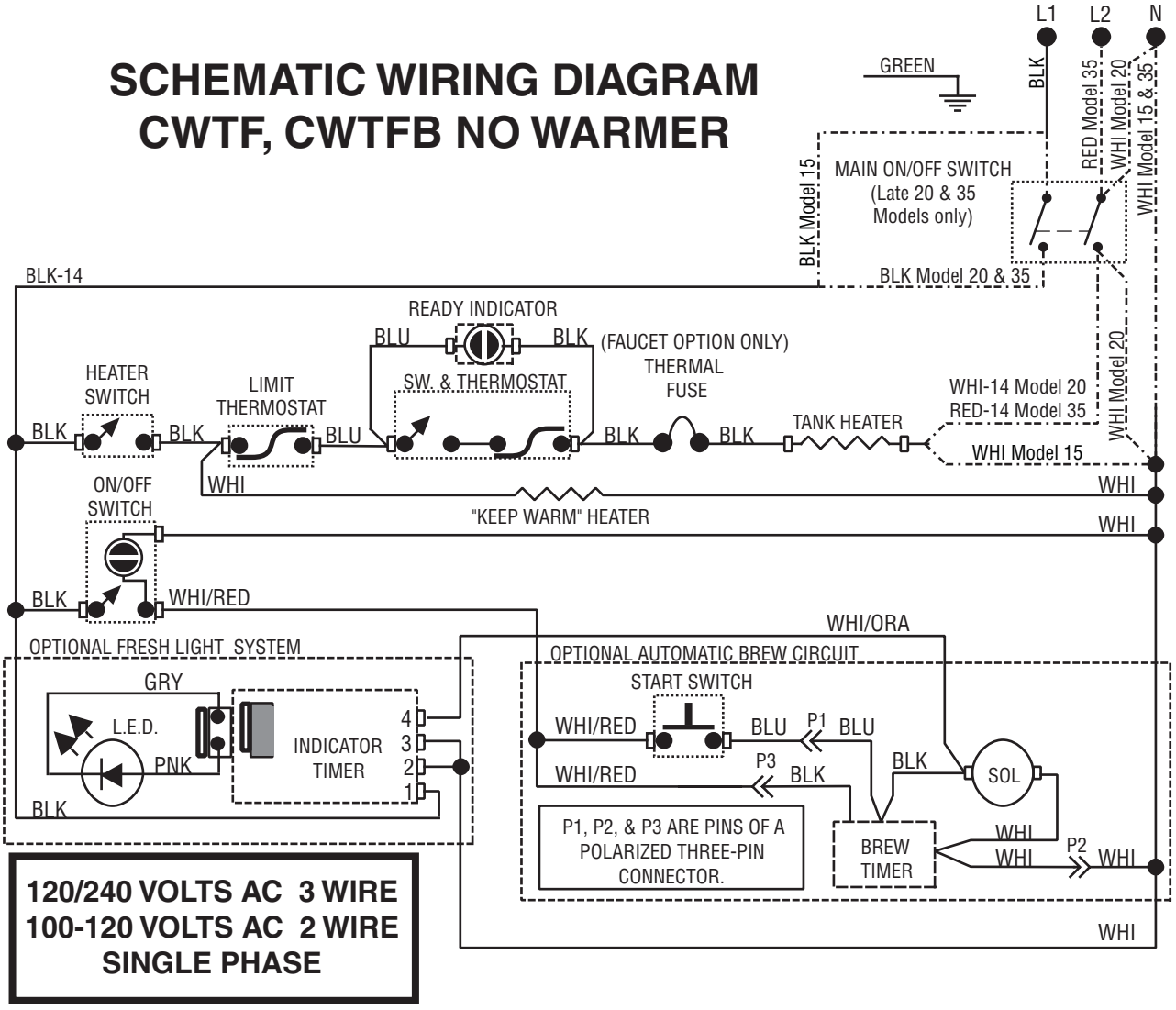

10836.0006M 02/07 ©1995 BUNN-O-MATIC CORPORATION

SCHEMATIC WIRING DIAGRAM
CWTFA NO WARMER

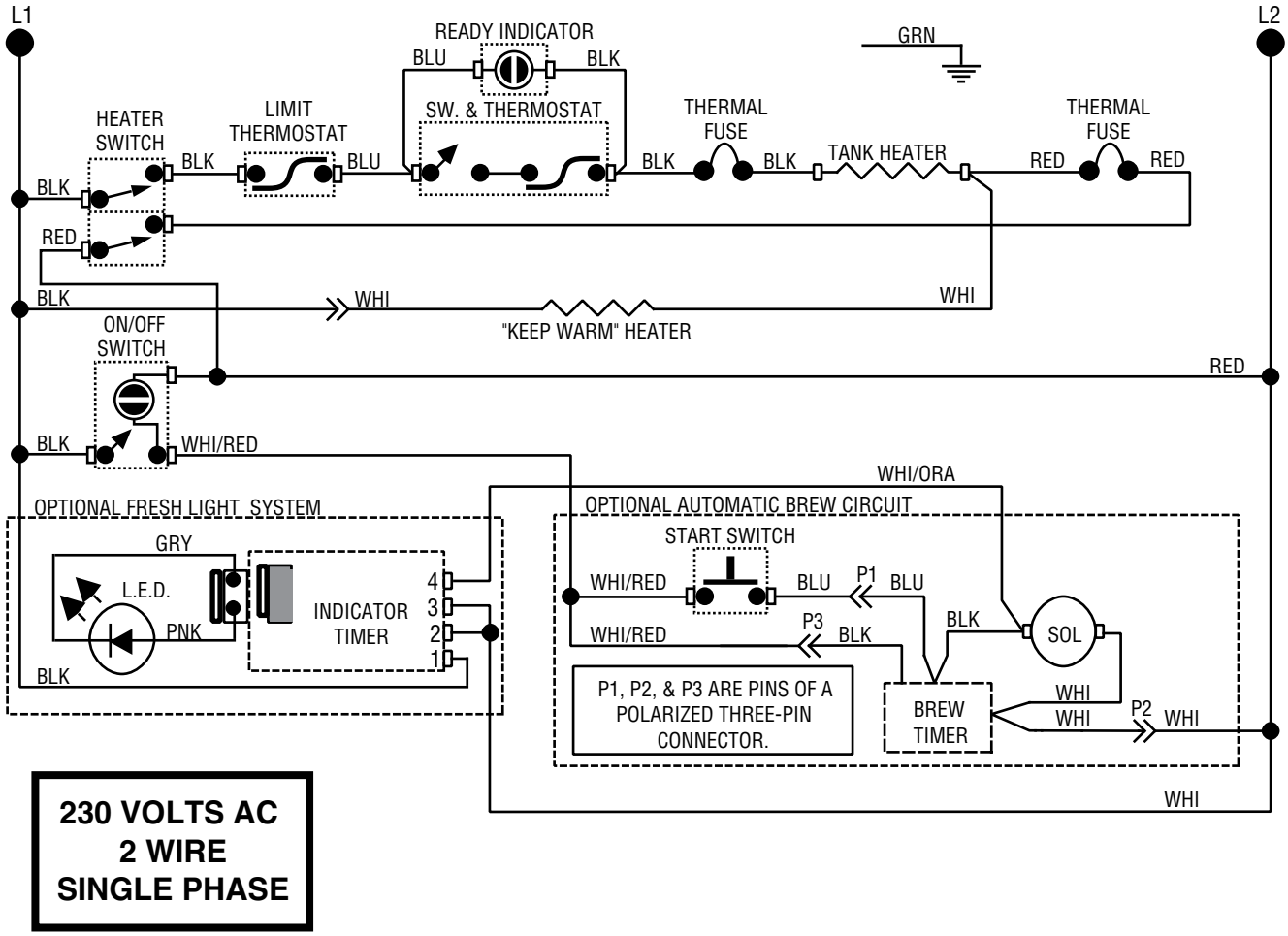

230 VOLTS AC
2 WIRE
SINGLE PHASE

10836.0008A 12/99 ©1999 BUNN-O-MATIC CORPORATION

SCHEMATIC WIRING DIAGRAM
CT-DV, CTF-DV, CWT-DV & CWTF-DV

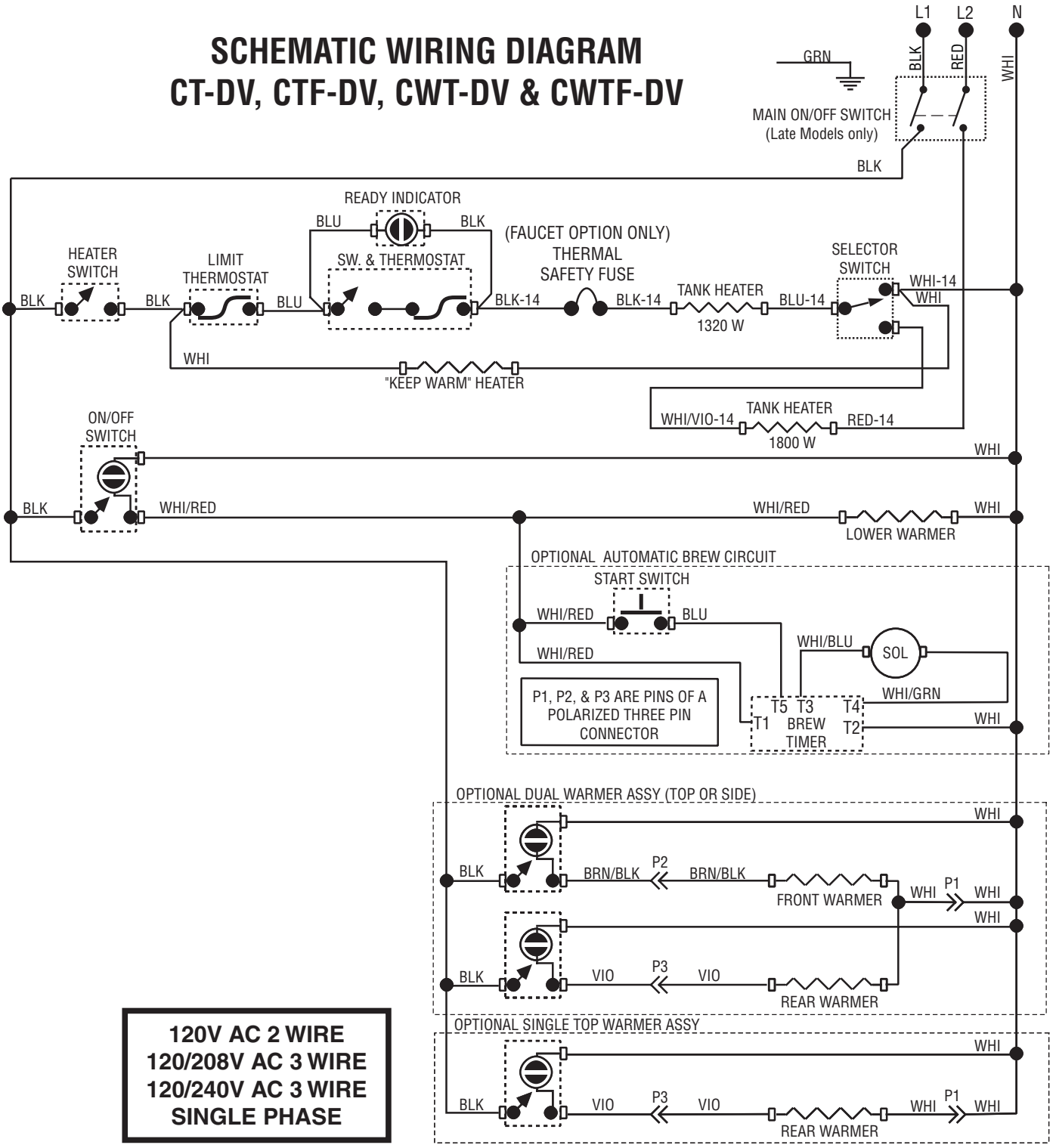

120V AC 2 WIRE
120/208V AC 3 WIRE
120/240V AC 3 WIRE
SINGLE PHASE

10836.0009C 02/07 ©2003 BUNN-O-MATIC CORPORATION

SCHEMATIC WIRING DIAGRAM
CWT, CWTF - APS, TS, TC DV

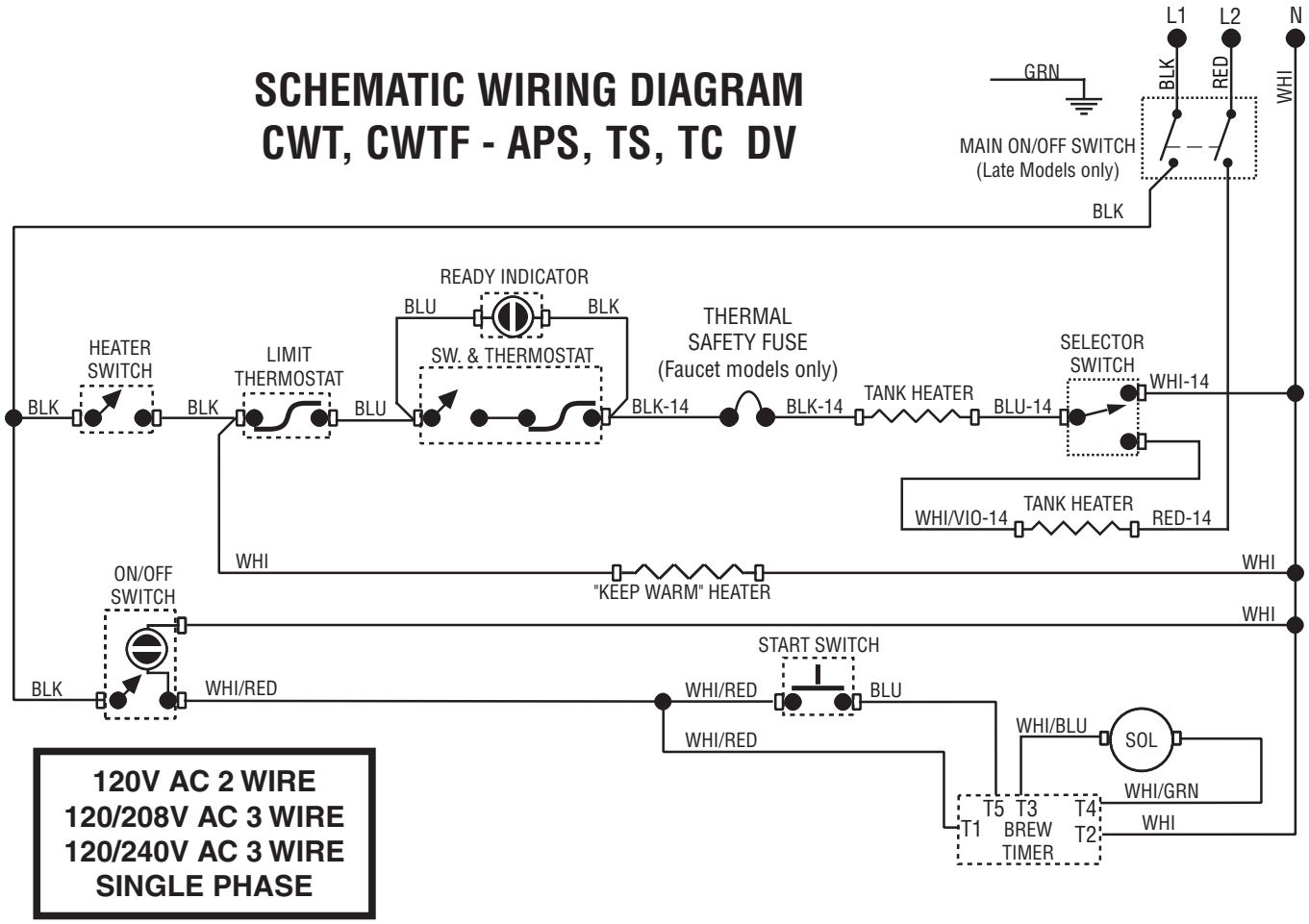

10836.0010B 02/07 ©2001 BUNN-O-MATIC CORPORATION

SCHEMATIC WIRING DIAGRAM
SINGLE CW

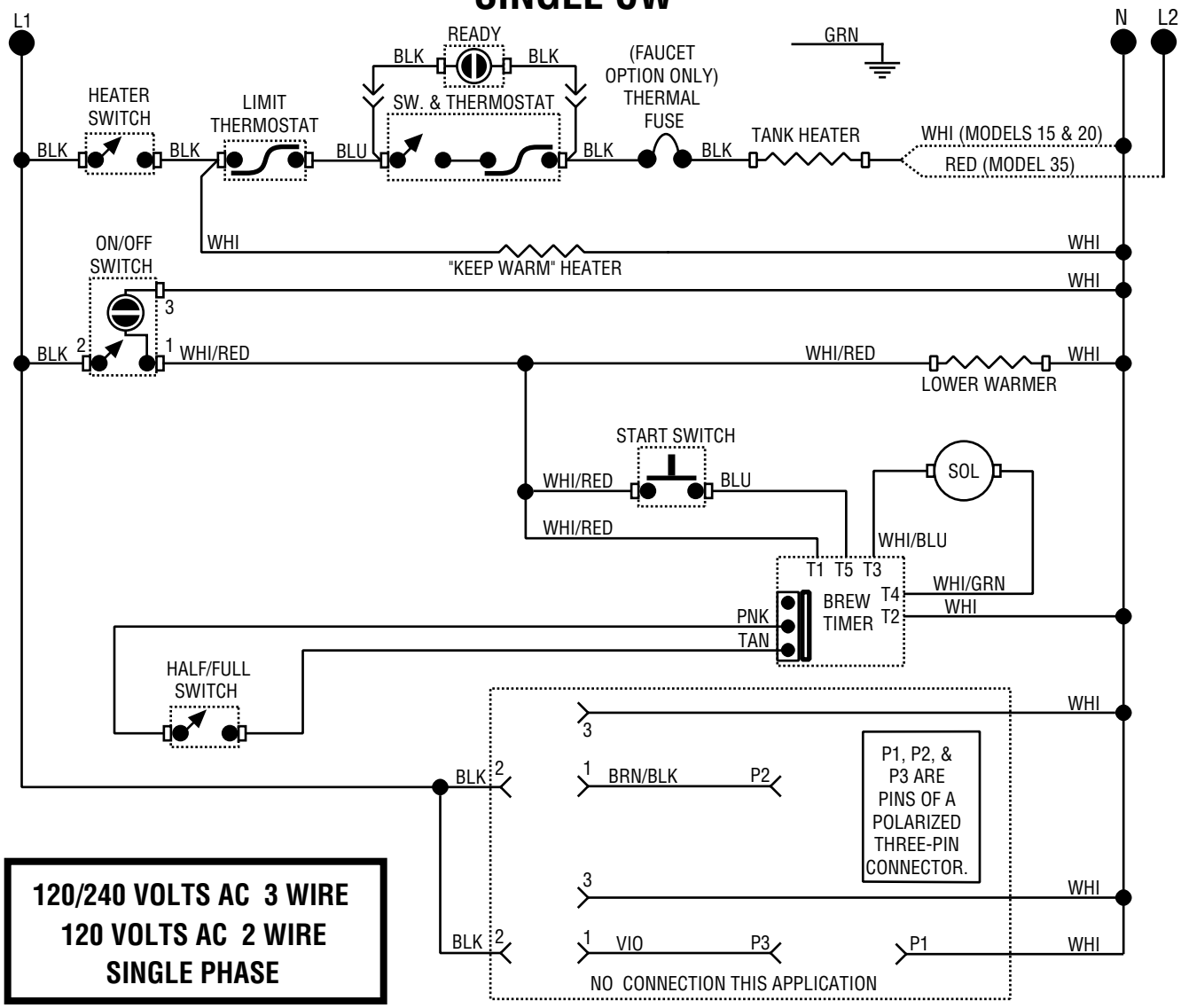

120/240 VOLTS AC 3 WIRE
120 VOLTS AC 2 WIRE
SINGLE PHASE

10836.0011B 01/03 ©2003 BUNN-O-MATIC CORPORATION

SCHEMATIC WIRING DIAGRAM
CWTF TWIN 4/2 & 0/6 TWO-CIRCUIT

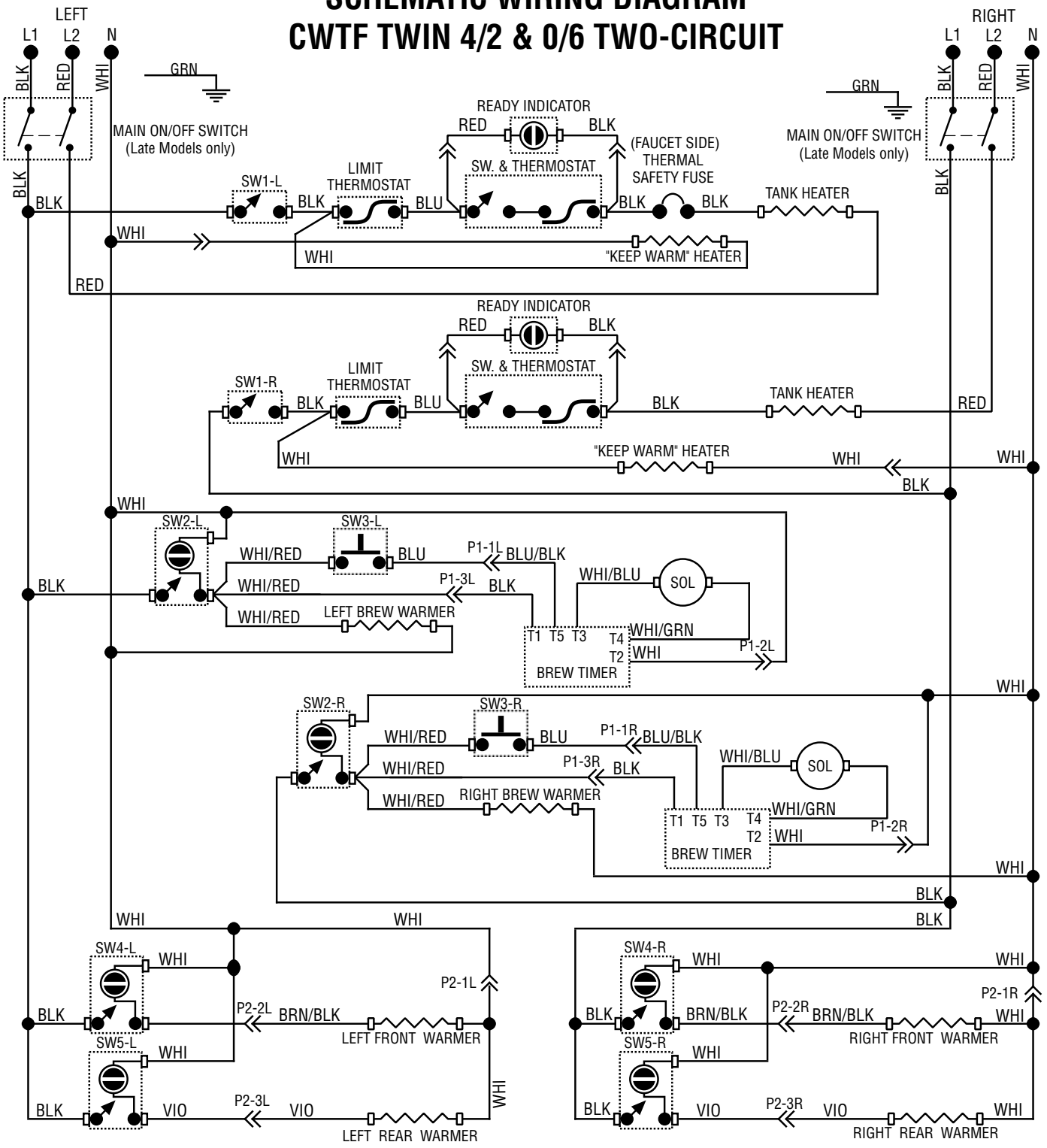

TWO INDIVIDUAL BRANCH CIRCUITS REQUIRED EACH RATED 120/240 VOLTS AC 3 WIRE + GND SINGLE PHASE

10847.0000D 01/07 ©1994 BUNN-O-MATIC CORPORATION

SCHEMATIC WIRING DIAGRAM CWT TWIN 2/2 & 4/2 W/RECOVERY BOOSTER

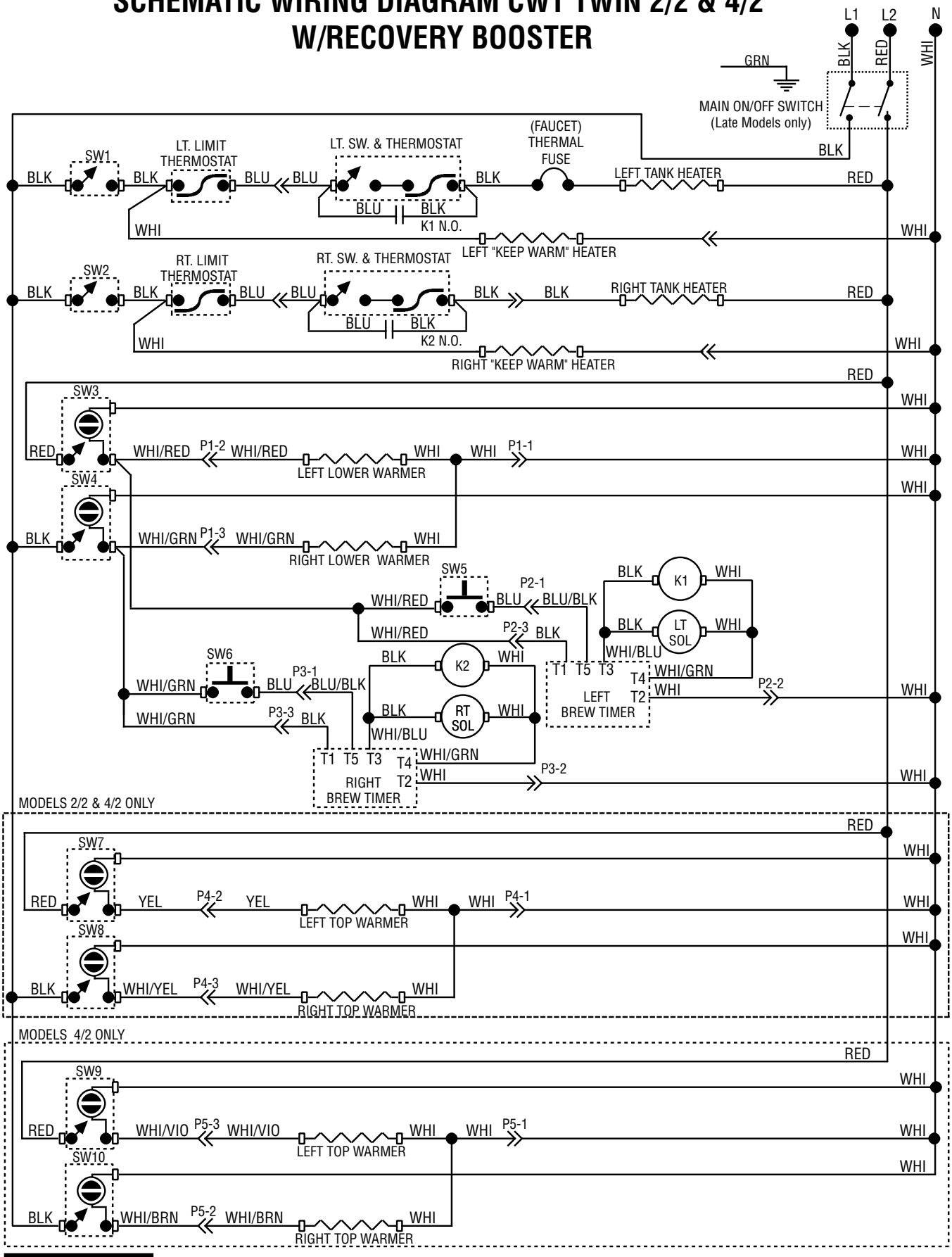

120/240 VOLTS AC
3 WIRE + GND
SINGLE PHASE

10867.0000F 01/07 © 1995 BUNN-O-MATIC CORPORATION

SCHEMATIC WIRING DIAGRAM CWTF TWIN 0/6 WITH RECOVERY BOOSTER

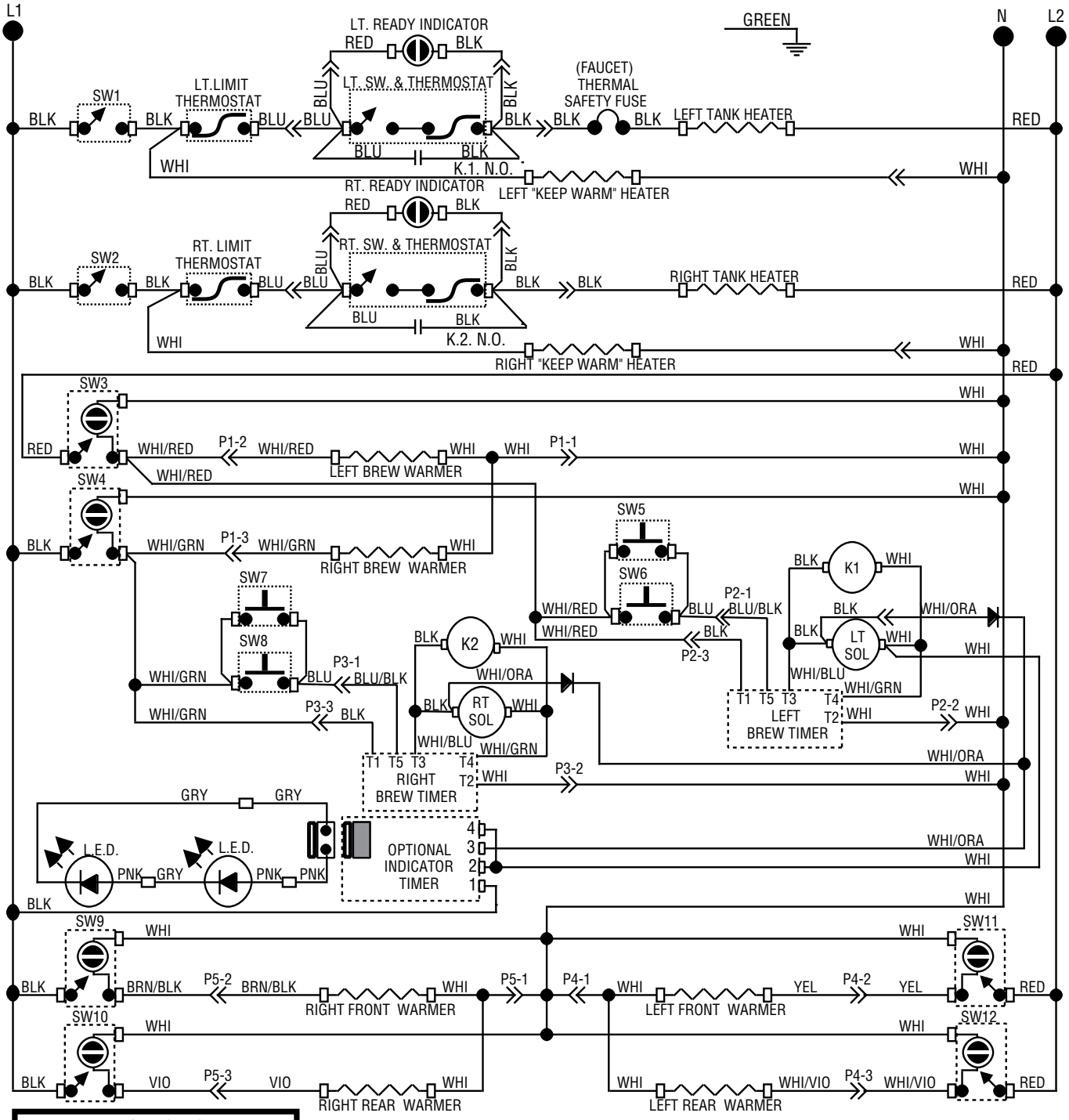

120/240 VOLTS AC 3 WIRE SINGLE PHASE

27693.0000D 07/03 © 1996 BUNN-O-MATIC CORPORATION