2 in. (50 mm) Solid Brass 4-Dial Resettable Combination Padlock (2-Pack)

1. To open: Set dials to 0-0-0-0 to open lock. Push shackle down into lock body to release.
2. Reset combination: Insert and firmly push change key into lock body keyway. (fig. 1) While fully inserted, rotate key 90°. You can now reset the lock to your own custom combination.
3. Turn the dials to select your new custom combination.
4. Remove change key by rotating back 90°. Your lock will now open with your own custom combination.
5. To lock, spin dials to any set of numbers other than selected custom combination. Push shackle into lock body to engage locked position.

fig. 1

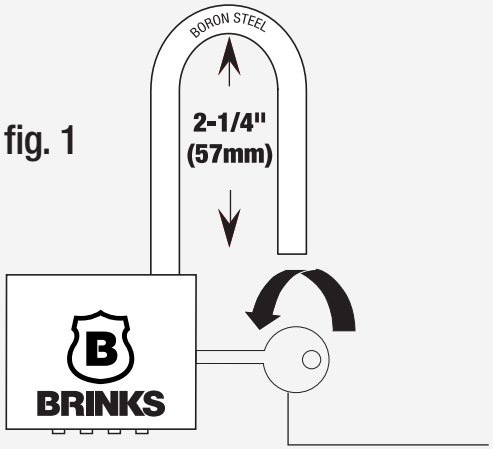

Change pin

