Electric Fireplace Insert

Model Number: EF262B EF263B EF264B EF265B

OWNER'S MANUAL

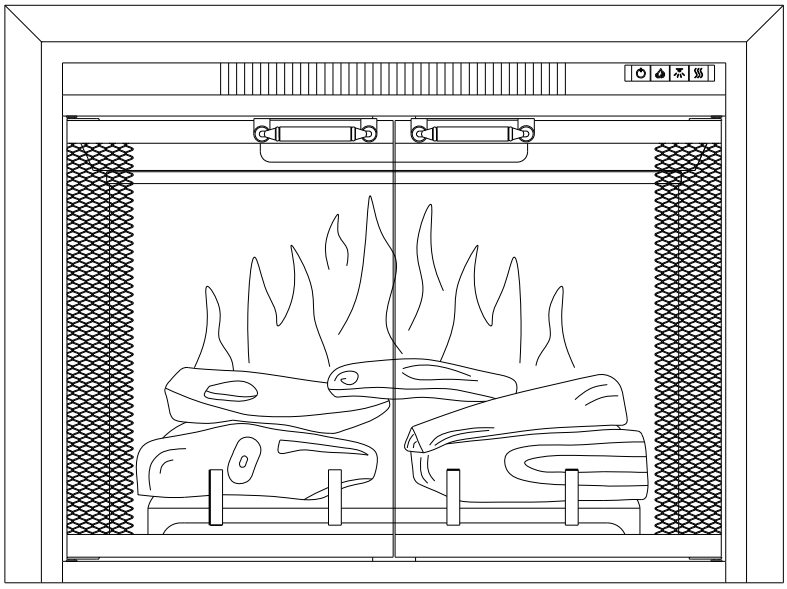

WARNING	**Read and understand this entire owner's manual, including all safety information, before plugging in or using this product. Failure to do so could result in fire, electric shock, or serious personal injury.**
CAUTION	**Keep this owner's manual for future reference. If you sell or give this product away, make sure this manual accompanies this product.**

DO NOT RETURN!

Contact our customer service team for help first.

Call: 949-385-6588

E-mail: service5@fireandfireplaceservice.com

CONTENT

1. Important Safety Information 1
2. Technical Specifications 4
3. Before Installation 5
4. Installation Instruction 6
5. Operation Instruction 9
   5a. Manual Control Panel 9
   5b. Remote Control 10
6. Care and Maintenance 13
7. Limited Warranty 14
8. Troubleshooting Guide 15
9. Schematic Diagram 17

1. IMPORTANT SAFETY INFORMATION

WARNING

- **Read all instructions before using this heater!**
- This heater is **hot when in use**. To avoid burns, **DO NOT** let bare skin touch **hot** surfaces. If provided, use handles when moving this heater. Keep **combustible materials**, such as furniture, pillows, bedding, papers, clothes, and curtains at least **3 feet (0.9m)** from the **front of the heater**, and **keep them away from the sides and rear**.
- **Extreme caution** is necessary when any heater is used by or near **children** or **invalids** and whenever the heater is left **operating and unattended**.
- **DO NOT** operate any heater with a **damaged cord or plug** or after the **heater malfunctions**, has been **dropped** or **damaged in any manner**. Discard heater, or return to authorized service facility for examination and/or repair.
- **DO NOT insert** or **allow foreign objects** to **enter any ventilation or exhaust opening**, as this may cause **electric shock** or **fire**, or **damage the heater**.
- **INDOOR use only! NEVER** use this heater **outdoors!** Doing so may result in **electric shock!**
- To disconnect heater, turn controls to off, and turn off power to heater circuit at main disconnect panel (or operate internal disconnect switch if provided).
- To prevent a possible fire, **DO NOT** block air intakes or exhaust in any manner. Doing so could cause a **fire**. **DO NOT** use on soft surfaces, like a bed, where openings may become blocked.
- A heater has **hot and arcing or sparking parts inside**. **DO NOT** use it in areas where **gasoline, paint, or flammable liquids** are used or stored.
- **Use this heater only as described in this manual. Any other use not recommended by the manufacturer may cause fire,**

electric shock, or injury to persons.

- **Connect to properly grounded outlets ONLY.**
- **DO NOT place the heater near a bed** because objects such as pillows or blankets can fall off the and bed be ignited by the heater.
- **NEVER** use this heater in **bathrooms, laundry rooms**, or any other location where the heater could fall into a **bathtub** or **pool**, **become damp,** or **come in contact with water**.
- **AVOID FIRE!** Regularly inspect all air vents to make sure they are free from dust, lint, or other blockage. **Unplug the unit** and clean with a **vacuum ONLY**. **DO NOT** rinse or get wet.
- **WARNING: REDUCE THE RISK OF FIRE OR ELECTRIC SHOCK---DO NOT USE THIS HEATER WITH ANY SOLID STATE SPEED CONTROL DEVICES.**
- **For residential use only! NOT for commercial use!** Any commercial or public use of this heater **voids all warranties**, and could cause **injury**.
- This product is **not intended** to be a **primary heat source.** It is for **supplemental heat only.**
- **NEVER modify this heater**. Doing so could result in personal **injury** or property **damage.** Modification of this fireplace **completely voids all warranties**.
- **ALWAYS disconnect** this unit from the **power** supply **before** performing any assembly or cleaning, or before relocating the electric fireplace.
- **NEVER** leave this heater unattended. **ALWAYS** unplug this heater when not in use.
- **ALWAYS** store this heater in a dry location. **NEVER** use the fireplace if it has become wet.
- **ONLY** use this heater on a **120V AC 15-Amp circuit**. **NEVER overload the circuit.** If this heater trips the circuit breaker, unplug all other appliances on the same circuit before the next use. Avoid plugging other appliances into the same circuit as

this heater.

- **NEVER** plug this heater into an outlet that is **old**, **cracked**, or has any **loose wires or connections**. Plugging this heater into a faulty outlet could result in **electric arcing** within the outlet that could cause the **outlet** to **overheat or catch fire**.
- **ALWAYS** check your heater cord and plug connections with **each use**!
  1. **MAKE SURE** the plug fits tigth in the outlet! Faulty wall outlet connections or loose plugs can cause the outlet to overheat.
  2. **Heaters draw more current** than small appliances. **Overheating** may occur even if it has not occurred with the use of other appliances.
  3. During use **check frequently** to see if the **plug outlet or faceplate** is **HOT**!
  4. If the outlet or faceplate is HOT,discontinue use immediately and have a qualified electrician inspect and/or replace the faulty outlets.

This heater has a three-blade grounding type plug as show in below picture. If there is a two-slot receptacles only, an adapter should be used for connecting three-blade grounding type plugs. The grounding lug extending from the adapter must be connected to a permanent ground such as a properly grounded outlet box by a metal screw. The adapter should not be used if a three-slot grounded receptacle is available.

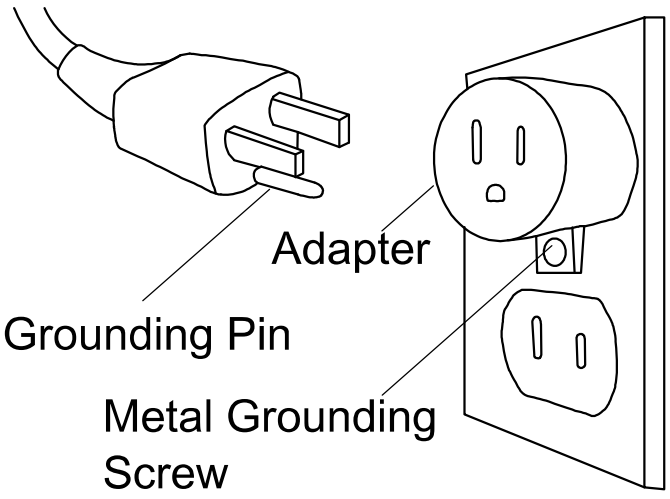

SAVE THESE INSTRUCTIONS!

2. TECHNICAL SPECIFICATIONS

Electric Specifications

Model	Volt	Watt (min/max)	Hz	BTU(max)	Amp	Heating Area(max)
EF262-265B	120	750/1500	60	5000	12.5	400 square feet

Product Dimensions

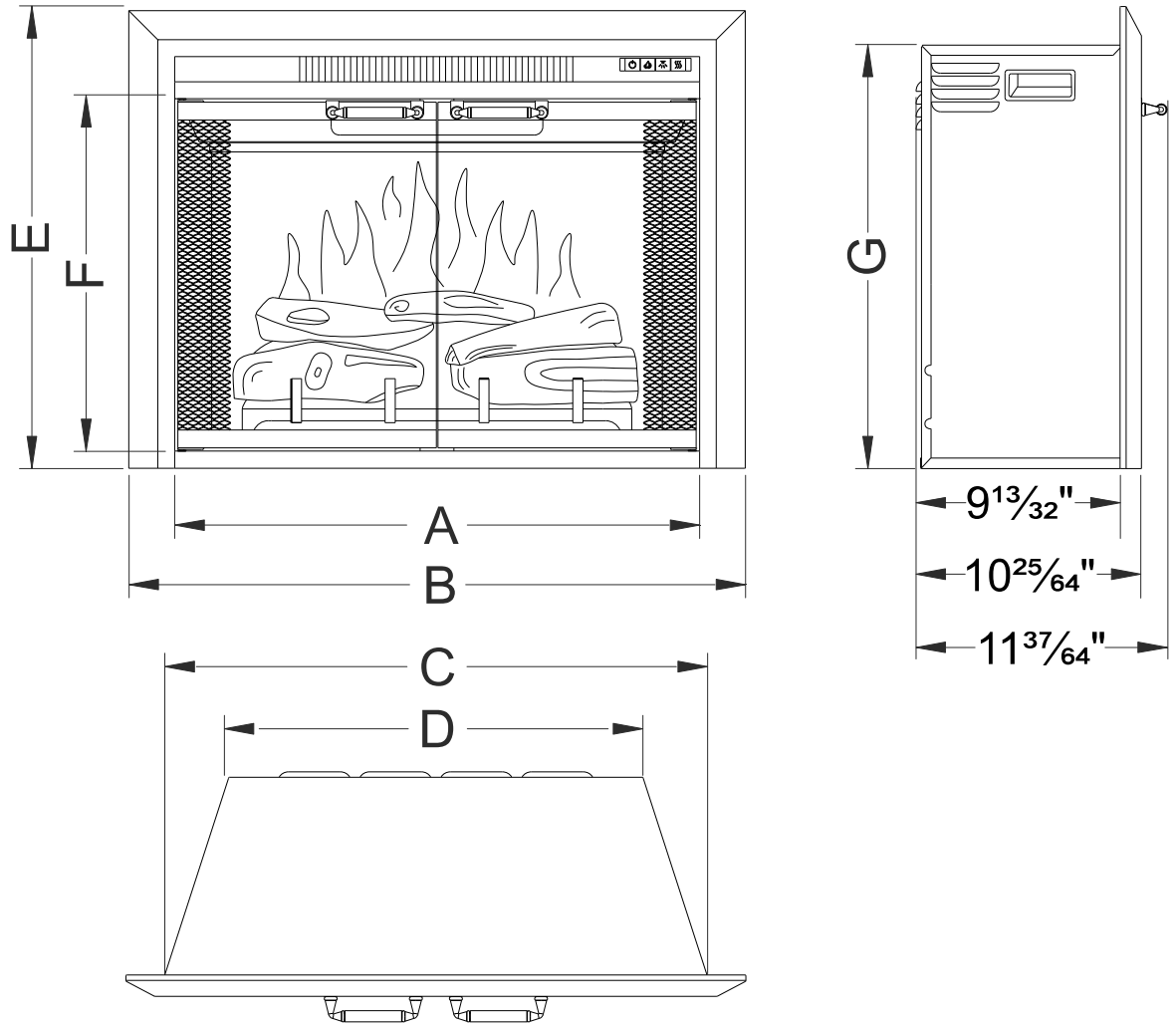

Model	unit	A	B	C	D	E	F	G
EF262B	Inch	24 13/32	28 21/32	25 5/64	19 9/64	21 17/64	16 3/8	19 31/64
	mm	620	728	637	486	540	416	495
EF263B	Inch	26 27/64	30 43/64	27 3/32	21 9/64	24 1/4	19 3/8	22 31/64
	mm	671	779	688	537	616	492	571
EF264B	Inch	30 7/16	34 11/16	31 7/64	25 5/32	26 7/64	21 7/32	24 21/64
	mm	773	881	790	639	663	539	618
EF265B	Inch	34 13/32	38 21/32	35 1/8	29 9/64	26 7/64	21 7/32	24 21/64
	mm	874	982	892	740	663	539	618

3. BEFORE INSTALLATION

Note:

- Keep the packaging (carton, poly bag, polystyrene, etc.) for future transportation and/or storage.
- **If the unit needs to be returned, please make sure all the spare parts are packed inside and packed the same as the original packing.**

Check Spare Parts

- Open the packaging carefully and remove the polystyrene.
- Check the spare part list below to verify all parts have bee received.
- Carefully check if any damages that may have for the insert o spare parts.

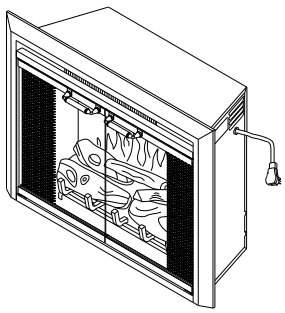 Insert (1 pc)	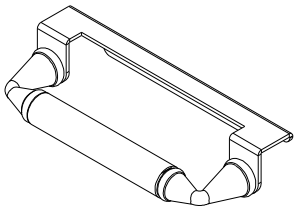 Door Handles (2pcs)	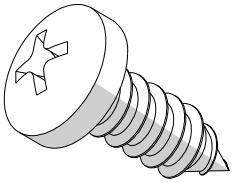 Screw ST4*10 (4pcs)
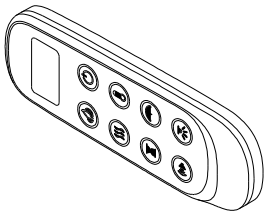 Remote Handset (1pc)	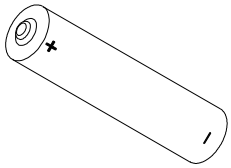 Battery (2 pcs)	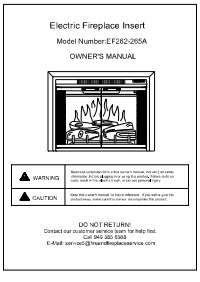 Owner's Manual (1 pc)

Function Testing

Please refer to section 5a. Manual Control Panel and 5b. Remote Control to test the appliance first before installtaion. **Should any defects found, please contact service team for help. Call 949-385-6588 or Email service5@fireandfireplaceservice.com.**

4. INSTALLATION INSTRUCTIONS

Locating the Appliance

Your new electric fireplace may be installed virtually anywhere in your home. However, when choosing a location, ensure that the general instructions for safety are followed.

- For best results, install out of direct sunlight, water or very damp air.
- Power supply service must be installed within proximity of electric fireplace prior to finishing avoiding reconstruction.

Note: This model can **NOT** be hard wired.

Minimum Clearance to Combustibles

Sides.....0 inch
Floor.....0 inch
Back.....0 inch
Top (shelf or TV).....8 inch
Front.....36 inch

WARNING! Risk of Fire! Keep electrical cords, drapery, furnishings or other combustibles at least 3ft. (0.9 m) from the front of the electric fireplace.

Electrical Supply Circuit Requirements

- Plan the location of the appliance so that it will have adequate electric power. A 15 AMP, 60Hz circuit is required for 120V installation. The appliance should ideally be located close to a suitable main socket to enable power connection.

- The power cord is 6ft long and locates on the right side of the unit. If the cord is found not long enough to reach the outlet, a grounded extension could be run from an existing socket outlet but a minimum size 14 AWG with a minimum rating 1875W would be recommended, and it should not be longer than 7ft and 10 31/64".
- Always make sure the outlet is in good condition and the plug is not loose. **NEVER** exceed the maximum amperage of the circuit.

Installation

- **Install the Door Handles**

Open the door and fix the handles with 2pcs ST4x10 screws on each side.

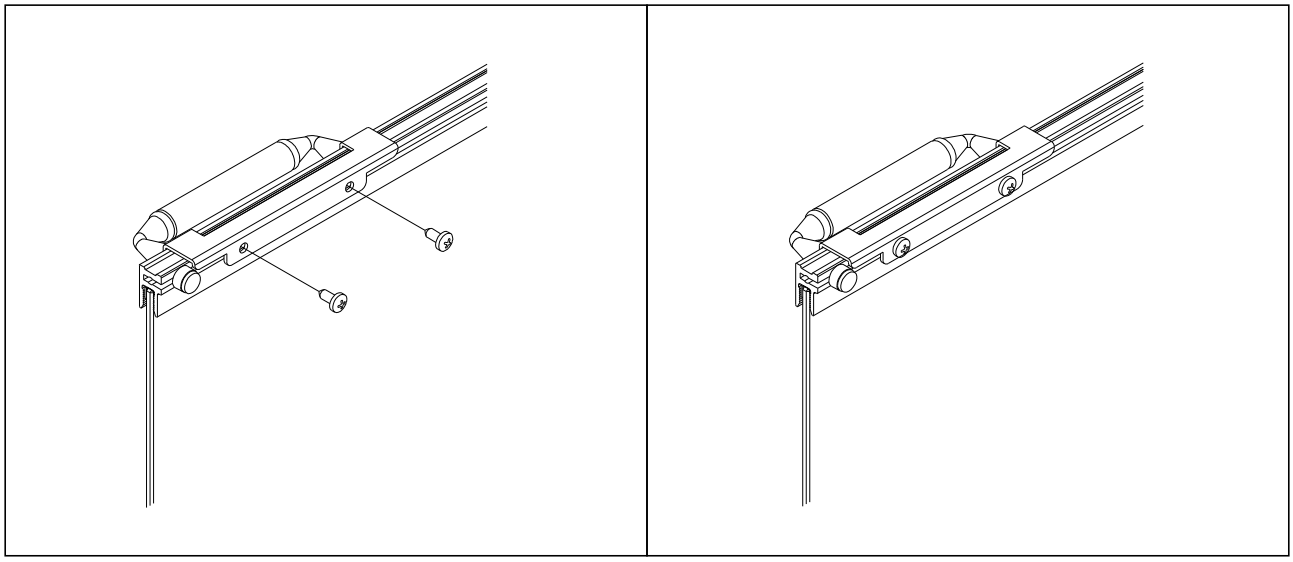

- This insert can be recessed into a wall or installed into a wood mantel or cabinet. The installation is very easy, just prepare the opening and outlet, plug it on and push it into the opening, NO extra steps need to take.
- The opening depth 9.7" (247mm) is suggested for better ventilation.
- 8" clearance would be suggested if there is a TV mounted directly above the unit.

- **Prepare an Opening and Insert**

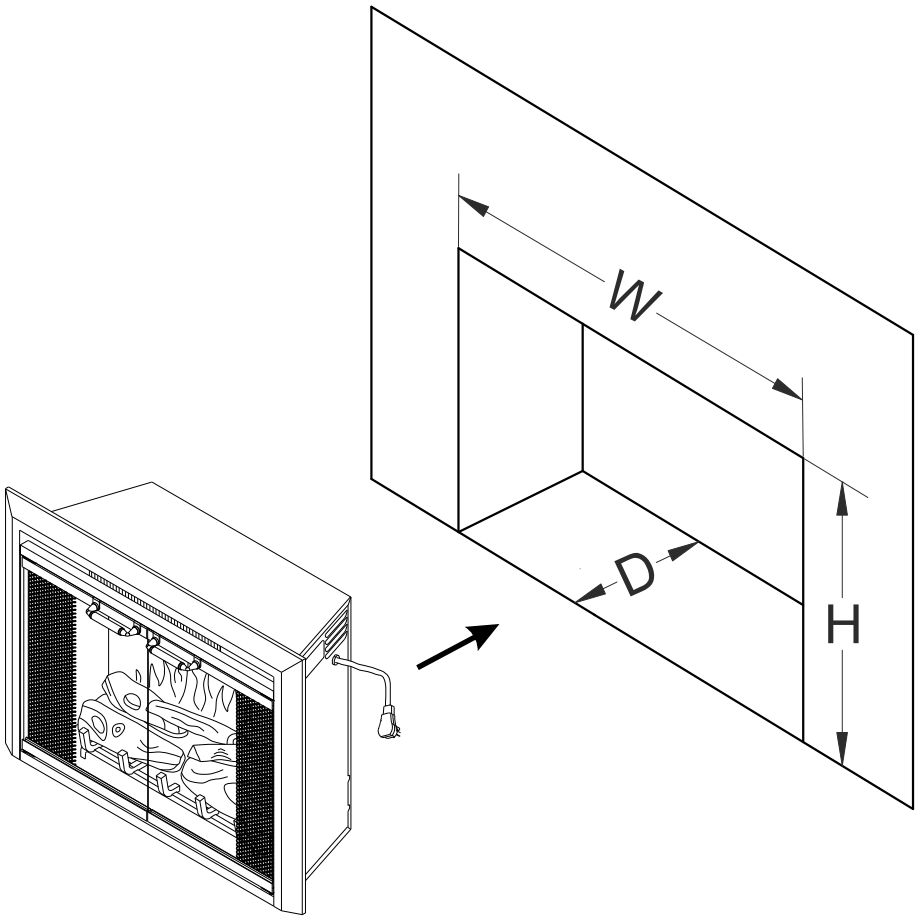

Model	Unit	W	H	D (min)	D (suggest)
EF262B	Inch	25 5/64 - 27 7/8	19 23/32 - 21 1/16	9 13/32	9 23/32
	mm	637-708	501-535	239	247
EF263B	Inch	27 3/32 - 29 7/8	22 23/32 - 24 1/16	9 13/32	9 23/32
	mm	688-759	577-611	239	247
EF264B	Inch	31 7/64 - 33 57/64	24 9/16 - 25 29/32	9 13/32	9 23/32
	mm	790-861	624-658	239	247
EF265B	Inch	35 1/8 - 37 7/8	24 9/16 - 25 29/32	9 13/32	9 23/32
	mm	892-962	624-658	239	247

- If the opening existing is too large for the insert, trim kits are available to be purchased separately, just contact the service team for purchase link. Call 949-385-6588 or Email service5@fireandfireplaceservice.com.

5. OPERATING INSTRUCTIONS

Read and understand this entire owner's manual, including all safety information , before plugging in or using this product. Failure to do so could result in electric shock, fire, serious injury, or death.

WARNING! Do not operate the unit if it is damaged or has malfunctioned. If you suspect the unit is damaged, call aqualified service technician to inspect and replace any part of the electrical system if necessary.

5a. Manual Control Panel

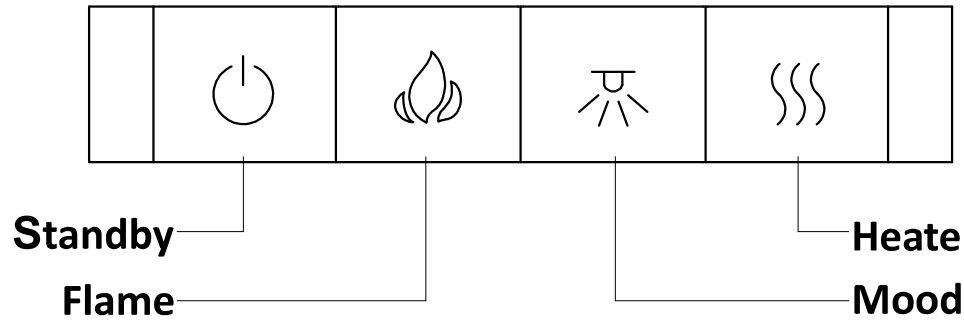

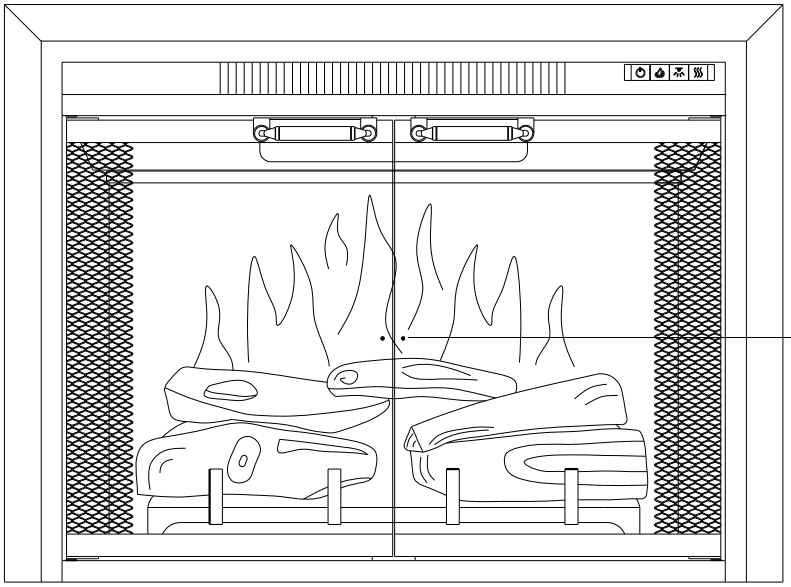

Note: When the heater is first turned on, a slight odor may be present. This is normal and should not occur again unless the heater is not used for a long period of time.

BUTTON	NAME	FUNCTION
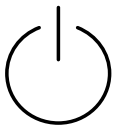	Standby	Press to power the fireplace on and enter standby mode or turn off all the functions at once.
	Flame	Press to cycle through 4 flame effects and off.
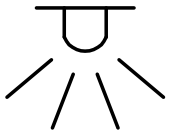	Mood Light	Press to cycle through 9 mood light effects and off.
	Heater	Press to cycle through Low – High – off. Heater will work regardless of the room temperature.

5b. Remote Control

Remote Control Battery

This remote control uses two AAA batteries (included).
Battery must be recycled or disposed of properly. Check with your local authority for recycling advice in your area.

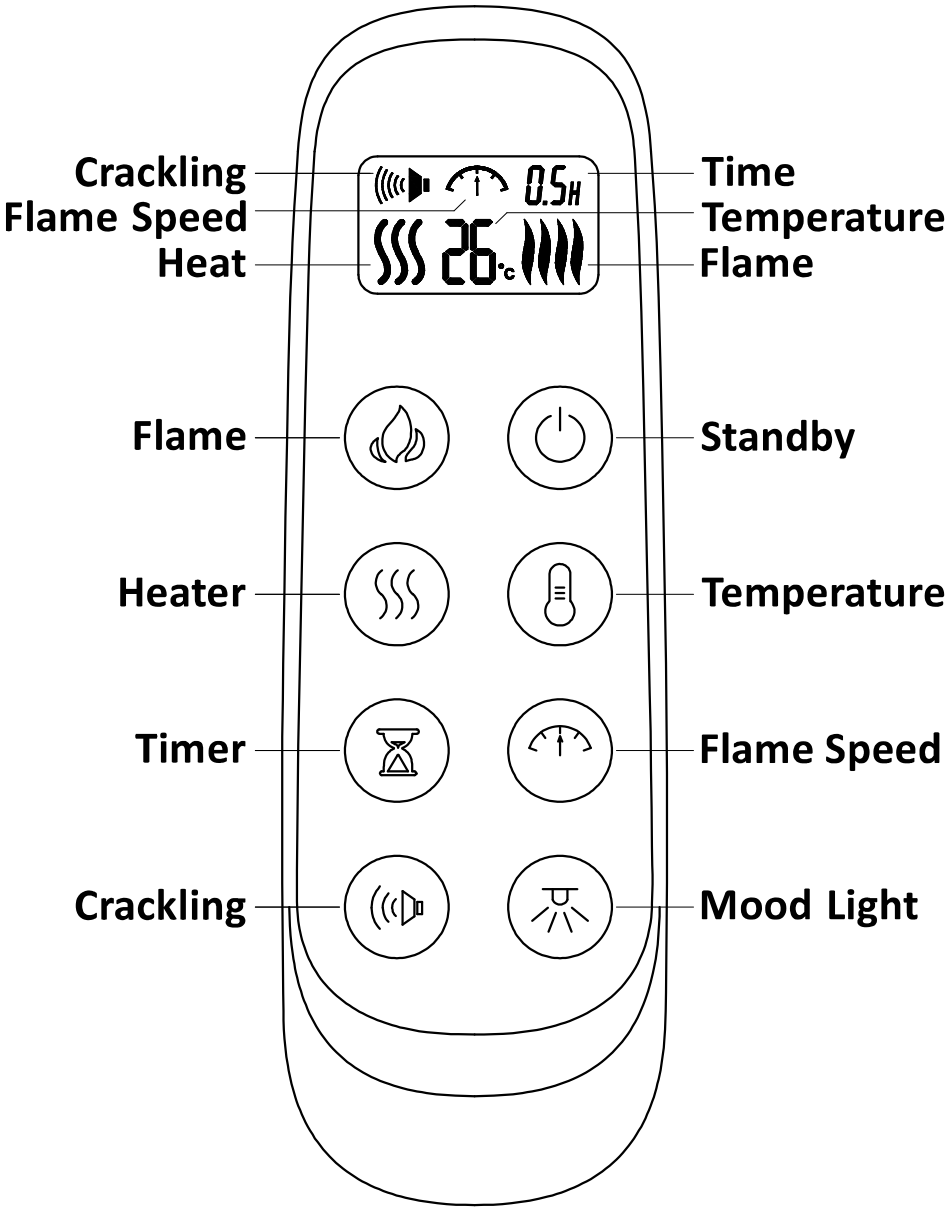

Note: Aim the remote control at the remote receiver.

BUTTON	TITLE	FUNCTION
	Standby	Press to turn the fireplace on and enter standby mode or turn off all the functions at once.
	Flame	Press to cycle through 4 flame effects and off.

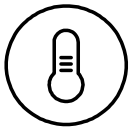	Temperature	Press to set the room temperature from 60 °F - 84 °F (16 °C - 28 °C) and off. Hold for 3 seconds to change the unit between °C and °F.
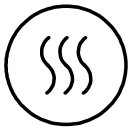	Heater	Press to cycle through Low – High – off.
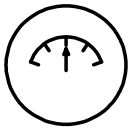	Flame Speed	Press to cycle through 5 flame speeds.
	Timer	Press to set the timer from 0.5H to 9.0H and off.
	Crackling	Press to cycle through 5 cracking and off.
	Mood Light	Press to cycle through 9 mood light effects and off .

NOTICE:

- Press the 'FLAME' button on the unit for 3s at least to cancel the beeps.
- The heater can be turned on without the flames. The red LED indicators will turn on for 10s (one for low heating and two for high heating), and the 3rd mood light at 5% brightness will keep on.
- The blower will turn on 10s before the heater is on and turn off 10s after the heater is off.

6. CARE AND MAINTENANCE



ALWAYS turn the heater OFF and unplug the power cord from the outlet before cleaning, performing maintenance, or moving this fireplace. Fail to do so could result in electric shock, fire, or personal injury.

Cleaning



NEVER immerse in water or spray with water. Doing so could result in electric shock, fire, or personal injury.

Metal:

- Buff using a soft cloth, slightly dampened with a citrus oil-based product.
- **DO NOT** use brass polish or household cleaners as these products will damage the metal trim.

Glass:

- Use a good quality glass cleaner and dry thoroughly with a paper towel or lint-free cloth.
- **NEVER** use abrasive cleansers, liquid sprays, or any cleaner that could scratch the surface.

Plastic:

- Wipe gently with a slightly damp cloth and a mild solution of dish soap and warm water.
- **NEVER** use abrasive cleansers, liquid sprays, or any cleaner that could scratch the surface.

Vents:

- Use a vacuum or duster to remove dust and dirt from the heater and vent areas.
- Clean the exterior of the fireplace with a slightly damp cloth or duster.

Maintenance

	**Risk of electric shock! DO NOT OPEN! No user-serviceable parts inside!**
	**ALWAYS turn the heater OFF and unplug the power cord from the outlet before cleaning, performing maintenance, or moving this fireplace. Failure to do so could result in electric shock, fire, or personal injury.**

Electrical and Moving Parts:

- The fan motors are lubricated at the factory and will not require lubrication.
- Electrical components are integrated in the fireplace and are not serviceable by the consumer.

Storage:

- Store heater in a clean dry place when not in use.

Replacement parts:

- Use only replacement parts supplied by the manufacturer. Use of any other parts, or modifying the fireplace in any way, will void all warranties.

7. LIMITED WARRANTY

This warrants to the original purchaser that this product is free from defects in material and workmanship as of the date of purchase and that it will, under normal use and proper care, remain so for one year from the date of purchase. Missing or initially defective parts will be replaced free of charge during the period of this limited warranty. If parts are unavailable, comparable replacement of refund will be given. **The original dated sales receipt is required for all warranty claims.** This warranty does not cover damage which has occurred during transport from the point of purchase to the consumer's home. This warranty does not cover glass, light bulbs, batteries, transportation, labor, or other issues not associated with the manufacture of the product.

This product is for residential use only. Any and all commercial use of this product voids all warranties, and frees the manufacturer from all liability.

Read and understand all assembly and operating instructions, and all safety information and warnings, before use. The following will void this warranty: Damage caused from tampering with, modifying, or altering the fireplace insert in any manner; Damage due to incorrect assembly, improper care, misuse, or abuse; Damage from being used with the wrong power source; Water damage; Damage caused from this insert being used outdoors; Damage caused from this insert being used for excessive periods of time; Damage caused by the insert being used in a commercial application; Damage from use as a primary heat source; Other misuse or abuse not specifically listed herein.

This product is not intended to be used as a primary heat source. It is for supplemental heating purposes only.

8. TROUBLESHOOTING GUIDE

PROBLEM	SOLUTION
There is no power to the fireplace, or it does not turn on.	1.Make sure the power cord is plugged into a functioning and properly grounded 15 Amp 120V AC electrical outlet. 2.If the unit had been working, but then turned off by itself, the temperature limiting control may need to be reset. 3.Check for damage to the power cord or plug. If damaged, DO NOT USE.
The control panel functions do not work.	1.Make sure the unit has power. If it is not, the functions will not work. 2.If it has, but the functions do not work, please e-mail us at service5@fireandfireplaceservice.com

The FLAME button doesn't work.	1.Make sure the unit has power. 2.If it has, but the flame does not work, please e-mail us at service5@fireandfireplaceservice.com
The heater does not work.	1.Make sure the unit has power. 2.Control Panel: Press the heater button on the control panel to override the thermostat at any time. 3.Remote control: Make sure the thermostat is not set too low. If the thermostat is set lower than room temperature, the heater will not turn on. 4.If none of these solutions work, please e-mail us at service5@fireandfireplaceservice.com
The heater does not blow hot air when it turns on and off.	This is normal. The fans blow cool air while the heater gradually heat up. The fans blow after the heater turn off to cool the heater and prevent overheating.
The remote control does not work.	1. Make sure the batteries are properly installed. 2.Make sure the unit has power. The remote control will not work unless the unit is powered on. 3.Aim the remote control at the receiver. 4.Remove objects that may be in the way. Items between the remote control and the remote control receiver will block the signal. 5.Don’t press the remote control buttons too quickly. Gave the unit time to respond to your commands.
The thermostat does not work.	1.Make sure the heater is turned on. The thermostat will not work unless the heater is turned on. 2.Make sure the thermostat is not set too low. If the thermostat is set lower than room temperature, the heater will turn on.

9. SCHEMATIC DIAGRAM

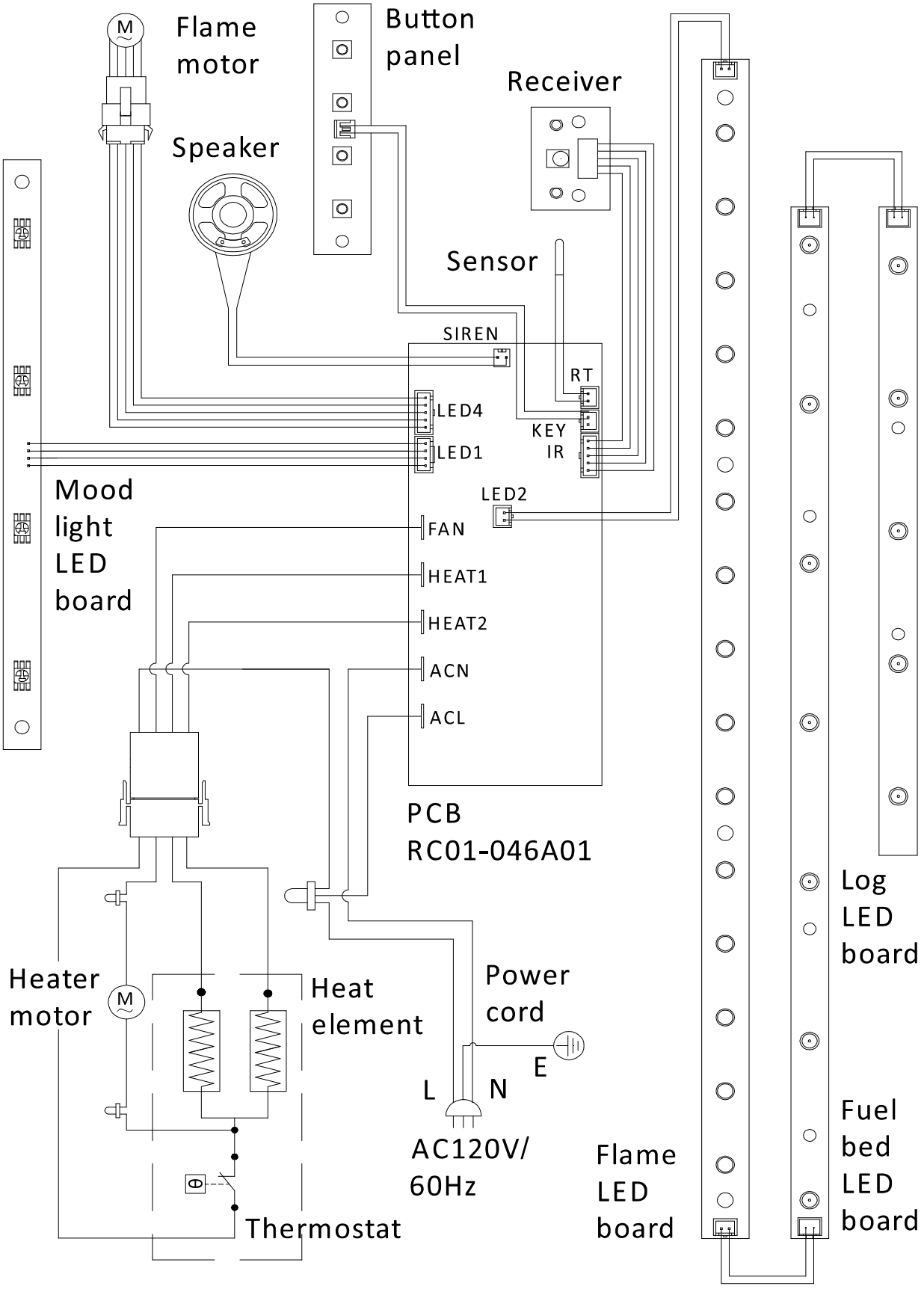

Legend Flame Group LLC

Address: 92 Corporate Park, Ste. C655 Irvine, CA 92606, United States