ASSEMBLY INSTRUCTIONS

READ THIS MANUAL

Do not use this product until you read and understand the instructions in this manual.

KEEP THIS MANUAL FOR FUTURE REFERENCE.

This manual is intended for installation and use.The pattern should be subject to the product you receive.

Version: 24.03.01

E-mail: us@gtplayer.com

www.gtplayer.com

If you have any questions about the product, please contact us through the contact information on the left. We will try our best to solve your problem within 24H (except weekends and holidays).

01 Check Various Accessories
Details of accessories

Please check and ensure all the things are in the package.
Please contact us for help if something is not included.

***Note:** Accessories **W1+W2** are placed in the seat side pocket. Please check whether they are all available before use. Please charge **W1** before use. Also, for safe use, read this manual and use it correctly.

Screws and Caps

o M5*8	r M6*35	v M6*20
p M8*20	s CAP	t M8*25
q M8*25	u M6*20	

5pcs	**4pcs**	**4pcs**
4pcs	**4pcs**	**4pcs**
16pcs	**5pcs**	

Please keep the original box in case you might need to return or replace the product.

Installation Video

Scan the QR code on the left to get the installation and usage video.

1 Install the base.

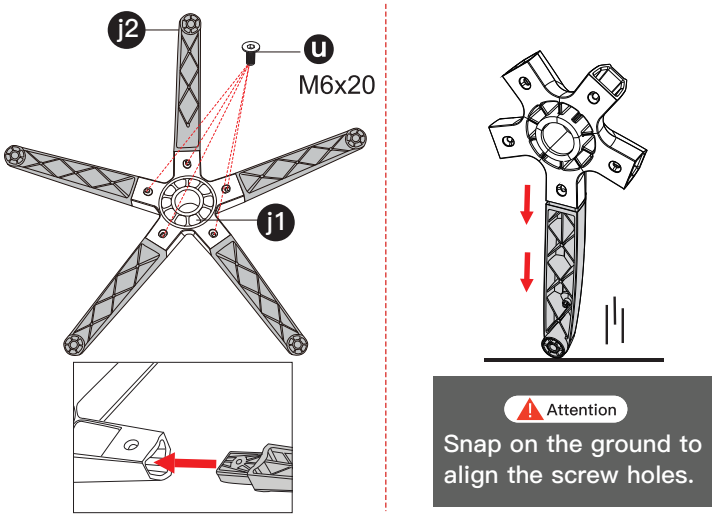

2 Insert the casters. Install the gas lift and insert the gas lift cover.

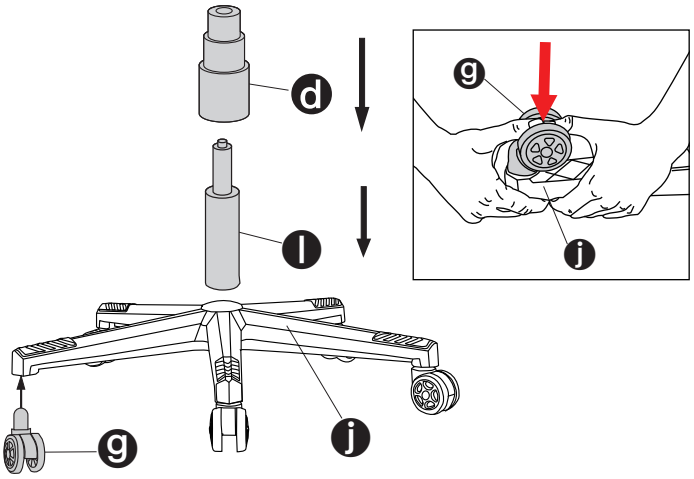

3 i3 is pre-installed on i2, check if the installation direction is as shown.

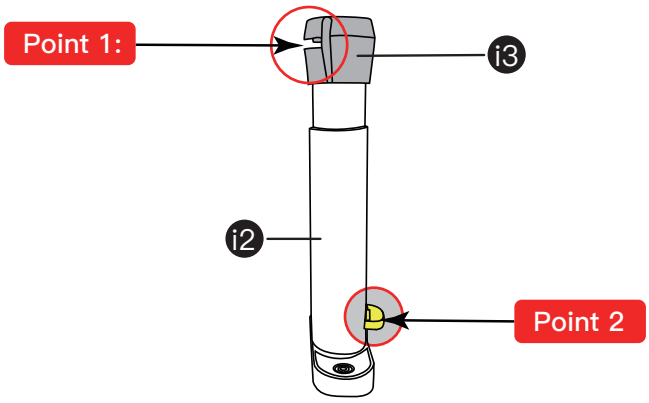

Points to note

Point 1: i3 The direction of the notch as shown in the diagram.

Point 2: i2 Buttons facing outward as shown in the image.

4 Install i4 into i3 with screws t.

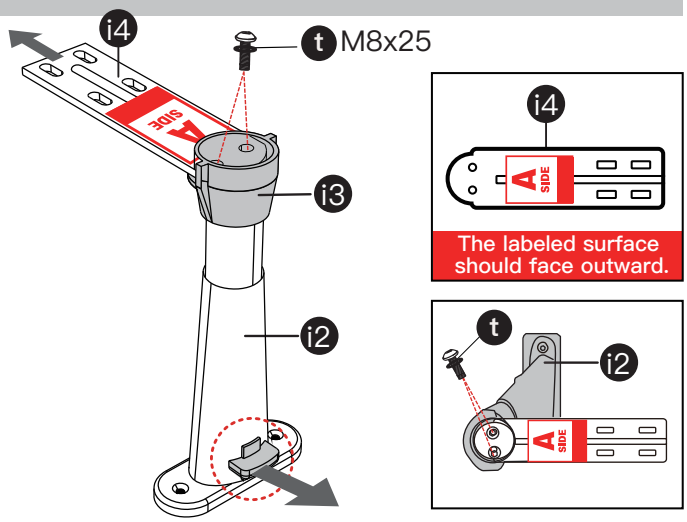

Please install as shown in the diagram and note the direction of the buttons.

⑤ Install the mechanism, armrests and footrest connectors.

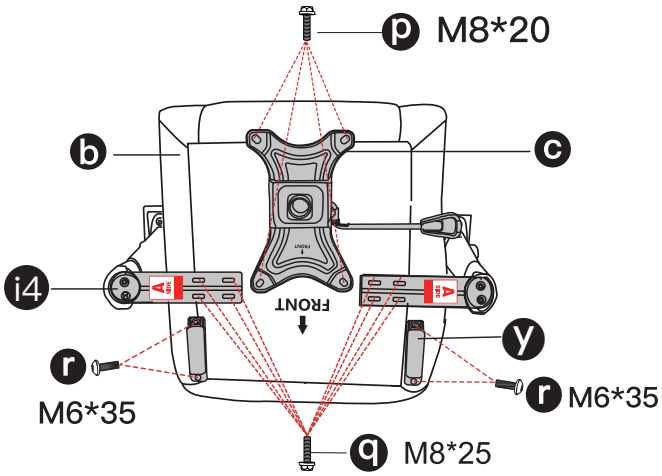

⚠ Attention

DO NOT tighten the screws completely until they are all fixed in the correct position.

⑥ Place seat on the gas lift

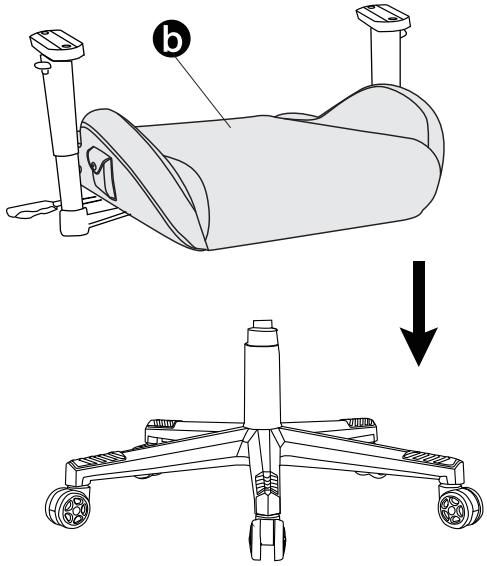

⑦ Install f & m on the seat and back.

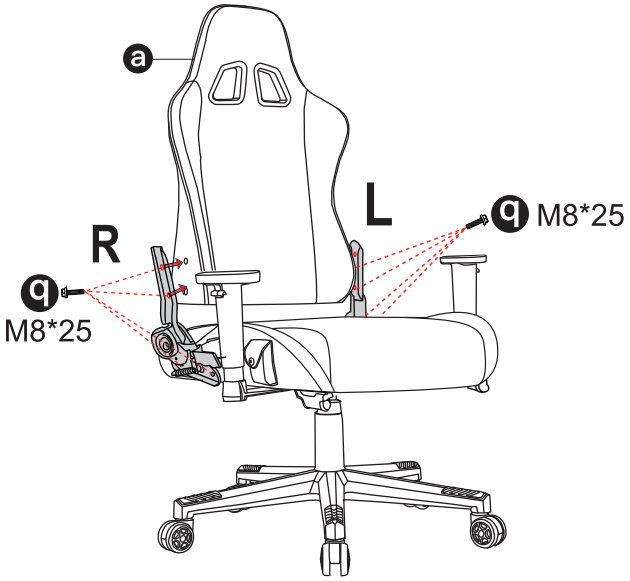

⚠ Attention

DO NOT tighten the screws completely until they are all fixed in the correct position.

1 First install f & m on the seat.

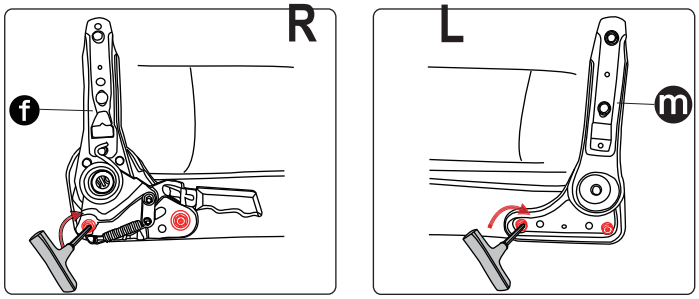

2 Then install f & m on the back.

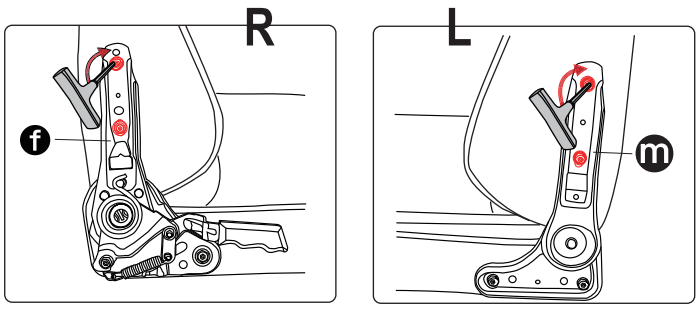

⑧ Put M5*8 screws through the holes of R1 & R2 and tighten them, and then put the caps on.

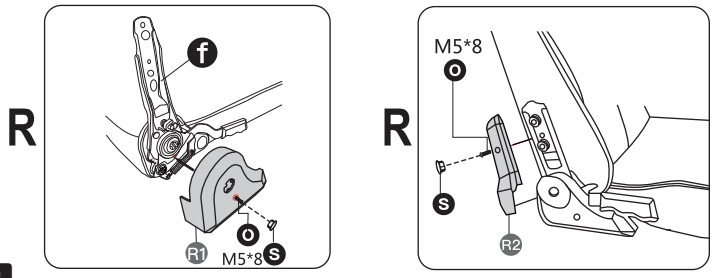

⑨ Install L1 & L2 with M5*8 screws, and then put the caps on.

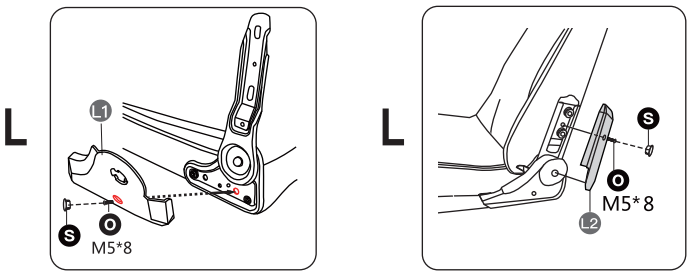

⑩ Attach the headrest.

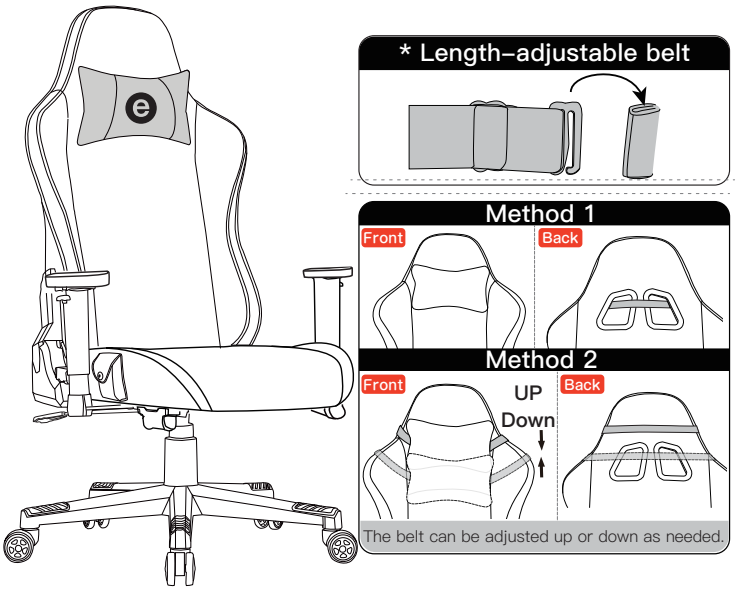

⑪ Attach the lumbar pillow.

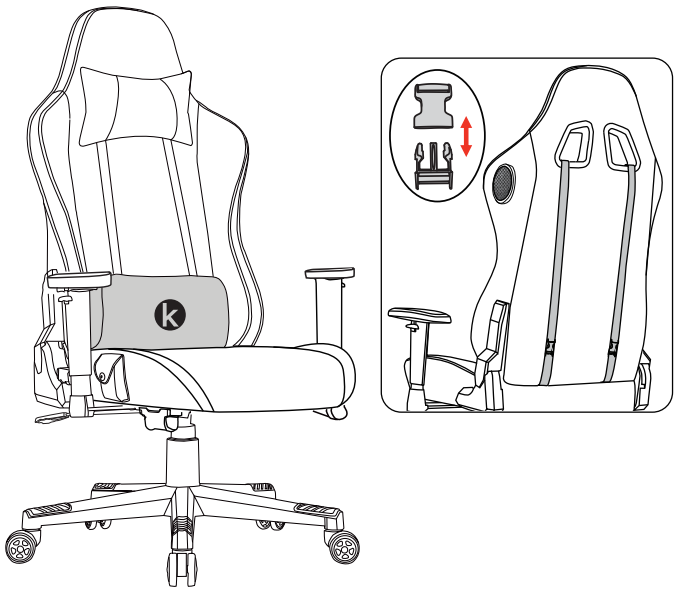

⑫ Install part of the armrests.

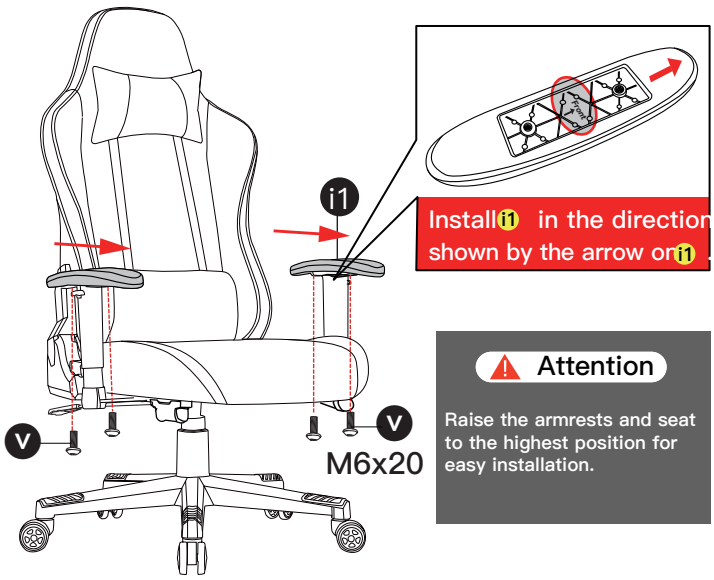

⑬ Insert the footrest into the footrest rails.

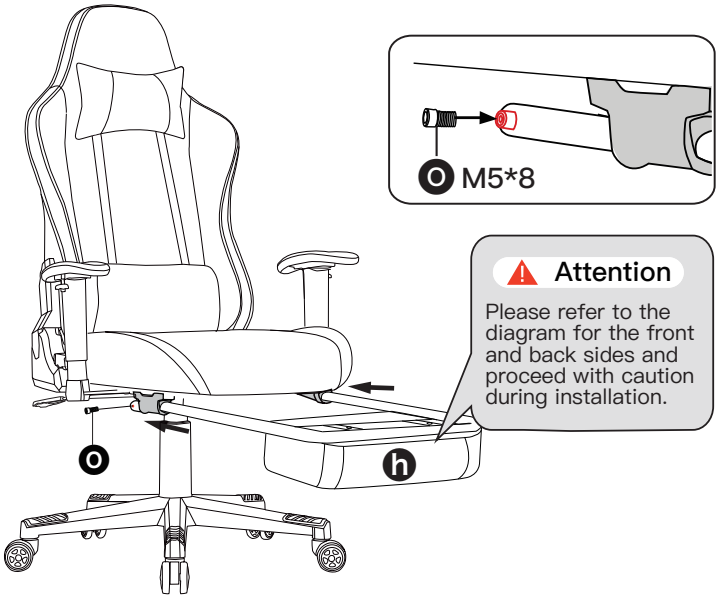

⚠ What to do if the chair squeaks: ⚠

Please check the areas and connections where the abnormal sound is coming from.

- Detach the parts connected to the gas lift and seat, then tighten the screws.
- Tighten the screws of the tilt adjuster and connecting parts (a total of 8 screws).

A

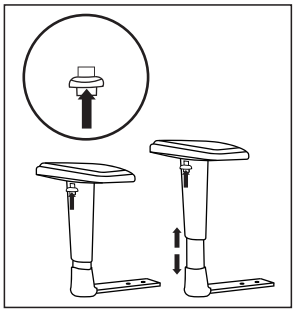

Lift up the button on the side of the armrest to adjust the height, raise or lower to the desired position.

B

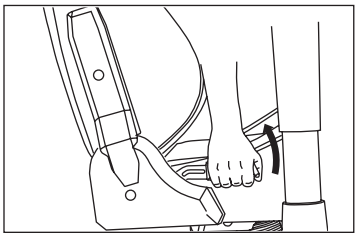

Tilt angle adjustor

Lift the tilt angle adjustor to recline and release it to any desired position. Lean on back when resetting back to its normal position to prevent hurts from excessive rebound strength of the chair.

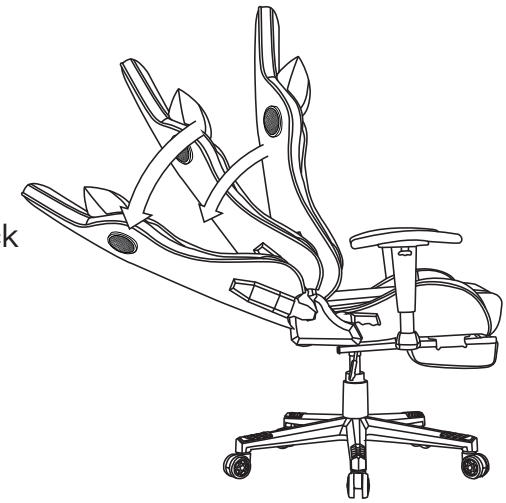

C

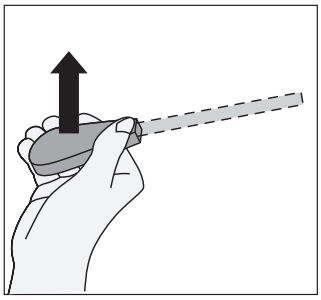

Pull upward on the lever to achieve the height adjustment.

D Bluetooth Receiver User Manual

01. This device can play audio through Bluetooth function.

Connect the cables

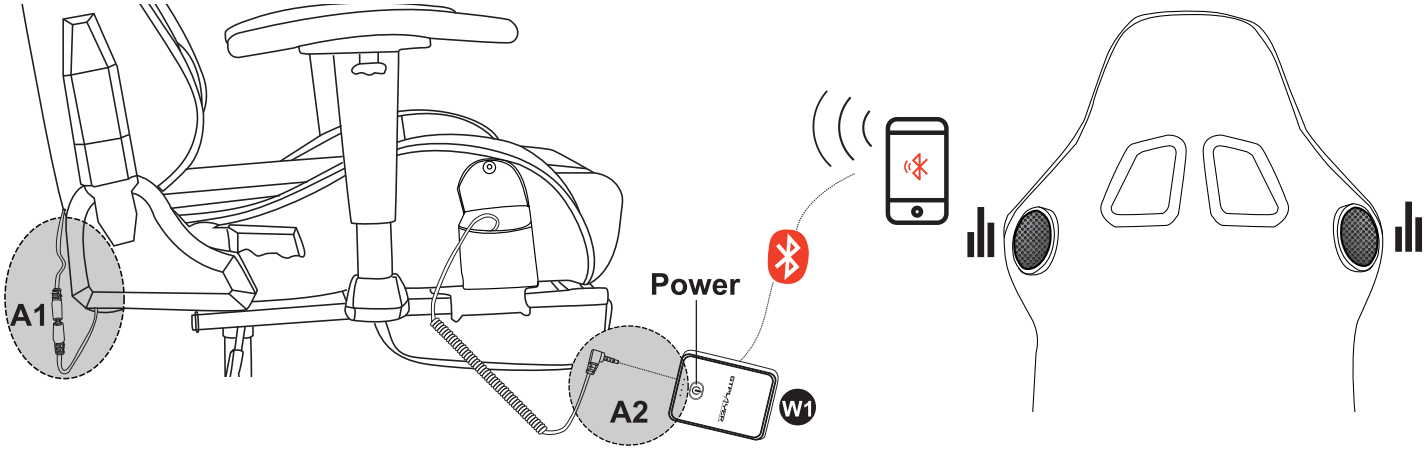

When hearing a click, the cables are properly connected in place.

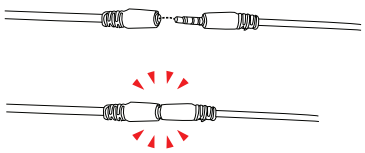

Attention Inability to produce sound from both sides of the speakers:

a. Try inserting the plug of the Bluetooth receiver into the socket multiple times.

b. Ensure that A1 and A2 are inserted until they make a clicking sound.

02. Contents

* W1 W2 are in the seat side pocket.

01 Bluetooth Receiver W1

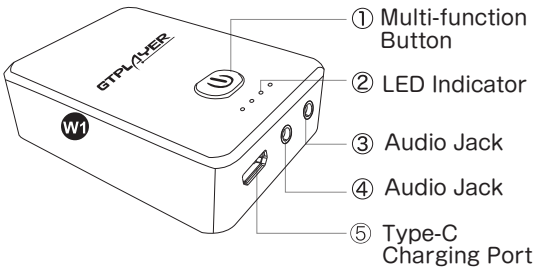

02 Charging Cable

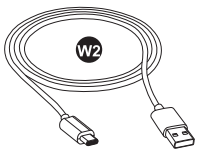

03 Bluetooth Speakers

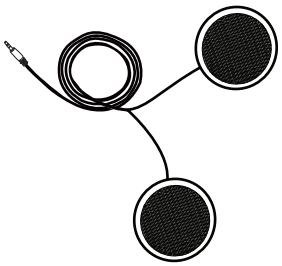

03. Bluetooth Speaker Receiver User Manual

(1). APP Control

APP QR CODE

The Bluetooth receiver W1 can be controlled through APP.
If you are interested, scan the APP QR code to get the APP.

(2). Charging

Connect the Bluetooth receiver W1 with type-C charging cable W2 or battery charger (Not included). Also, you can fully charge the Bluetooth receiver W1 for about 90min before use. (There are 4 blue lights ● ● ● ● in total, and one blue light ● represents 25% battery.)

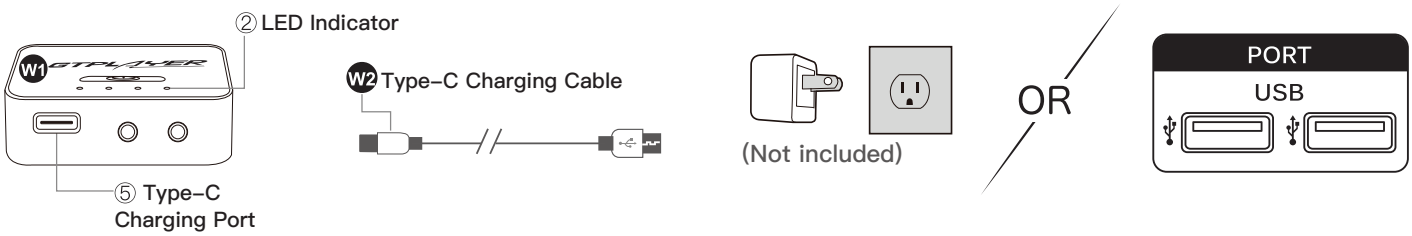

(3).Pair and Connect

Connecting to smartphones and other devices:

1. Long press the multi-function button ① for 2s to turn on the Bluetooth receiver W1. The LED indicator light flashes red and blue ● ● , and the voice will prompt **"POWER ON"**.
2. Activate the Bluetooth function on your phone and search for Bluetooth devices. Pair your phone to **"GTPLAYER"**.
3. After successful pairing, voice will prompt **"Connected"**.
4. If the connection is broken, voice will prompt **"Disconnected"**.
5. If there is no connection, the Bluetooth receiver W1 will automatically turn off after 5 min.
6. After connection, the blue light ● will light up. After a period of time, it will enter the energy -saving mode and only one blue light ● will be on for a long time.

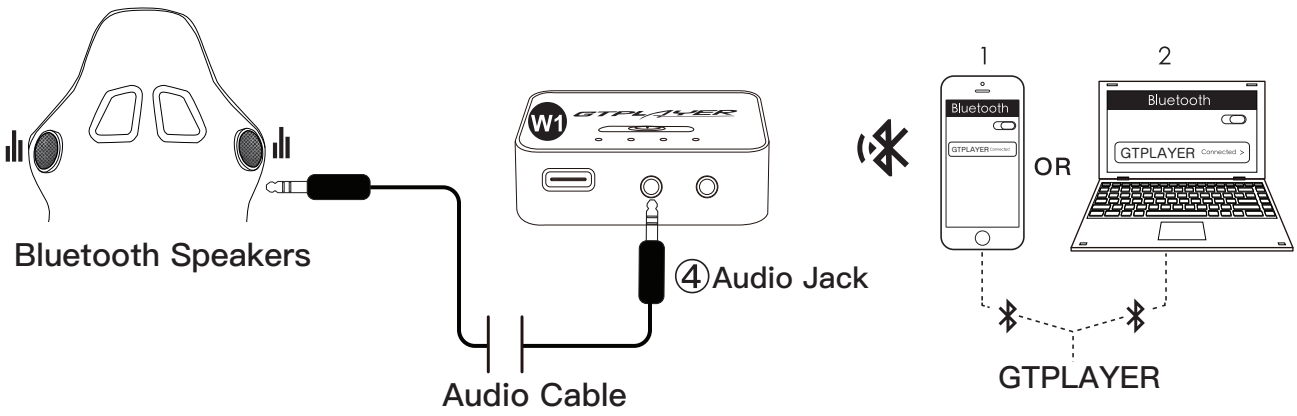

(4). Instructions of Multi-function Button

1). Power On — Long press the multi-function button ① for 2s to turn on the Bluetooth receiver W1 and the voice will prompt "POWER ON".

2). Power Off — Long press the multi-function button ① again for 5s to turn off the Bluetooth receiver W1 and the voice will prompt "POWER OFF".

3). Connect Bluetooth Reciver W1 to the Bluetooth speakers, now you can enjoy music wirelessly.

3.1). The music automatically pauses when you dial a phone number or receive an incoming call.

3.2). This Bluetooth music receiver doesn't have a microphone, so you need to switch the call to the mobile phone. The music will automatically play when the call is ended.

4). Play Music — Short press multi-function button once to play music.

Pause Music — Short press multi-function button once to pause when playing music.

5). Click the multi-function button ① to check the remaining battery.

(5). Bluetooth Receiver Indicator Reference

[Left 1 light: flashing red and blue ● ●] — Bluetooth pairing

[Left 1 light: blue light always on ●] — Bluetooth connected

[Left 1 light: flashing blue ●] — Charging

(6). Technique Specification

Power Input	USB 5V	Working Frequency	2.402 ~ 2.483ghz
Output Voltage	3.8V	Working Time	10-12H
Battery Capacity	1000mAh	Wireless Streaming Range Distance	10~15m (No occlusion)
Charging Time	90 min	Support Mobile System	Android / iOS

04. GAIN A COMPLETE INTERCONNECTED EXPERIENCE

?? No Bluetooth transmission function in your device? We recommend

! 「USB Bluetooth Transmitter "GT Lynck"」!

Compatible with 「Nintendo Switch, Windows7/8/10/11, PlayStation4/5」 and other devices to enjoy games, music and movies, "GT Lynck" can be used in a high-quality wireless sound environment. Want to own this product? Please check the "GT Lynck" product information in GTPLAYER store.

04 SAFETY & MAINTENANCE

Please read the safety introduction carefully.

Please use the chair properly to prevent any potential safety accidents.

Sit in the center of the chair with your back to the backrest.

DO NOT sit at the front edge of the chair.

DO NOT stand on the chair.

DO NOT use the chair with more than one person.

DO NOT turn the chair around when a person is sitting in it.

DO NOT push down on the backrest when a person is reclined

DO NOT place only your back on the chair

GTPLAYER popular gaming speakers (compatible with music chairs) creates a fully 4-channel surround sound experience when paired with a music chair, producing a richly detailed soundstage. If you're interested, please search for "GTPLAYER Speakers" on Amazon.

Model number: GT LYNCK PRO

GT LYNCK PRO1

4-channel surround sound experience.

MAINTENANCE

- Thank you for choosing us. GTPLAYER is dedicated to providing high-quality and safe products for comfort.
- GTPLAYER guarantees each of its new products to be free from defects in materials and/or defects caused by workmanship. This does not apply to normal wear and tear or to damage caused by neglect, lack of maintenance, abnormal operation or unreasonable use, damage caused by the use of accessories or parts not manufactured by GTPLAYER or components altered and/or disassembled.
- This warranty does not cover products purchased from unauthorized retailers or not owned by the original consumer. GTPLAYER does not cover lost or stolen items/parts.

Except to the extent prohibited by applicable law, any implied warranty of merchantability or fitness for a particular purpose on this product is hereby disclaimed .

GTPLAYER shall not be liable for any incidental, consequential, special, or punitive damages of any kind for breach of the express limited warranty on this product, or any warranty implied by operation of law.

Other than the express limited warranty set forth above, there are no other warranties that accompany this product, and any oral, written, or any other express.

Dear Customer,

Thank you for choosing us.

GTPLAYER has been implementing its brand and design concept “BE COOL BE FREE”, and we are dedicated to enriching gaming and shopping experience for customers.

For safe use, please read this manual before installation, and keep it for after use. Please feel free to email us if you have any concerns about our products. We'll reply within 24 hours.

The following are the things you need to pay attention to so that we can provide you with services when you encounter problems during the installation and use of the product:

- When the product is damaged due to courier problems, please contact our customer service in time for verifcation.
- We will rectify the issue as soon as possible;
- We give a 365-day quality assurance;
- We provide a 7-day no-reason return service (Note that the returned product will not affect the secondary sales).

We offer product explanations, installation instructions, product maintenance and maintenance methods.

If you feel satisfied with our product and service,

- Please set our store as your favorites;
- Please recommend our products to your friends;
- Please leave us your purchase experience in our store or product page.

Feedback or reviews from you will greatly help us offer better services to players around the world.

Best regards!

*** ATTENTION! During installation, DO NOT tighten the screws completely until all the screws are fixed in the correct position.**

E-mail: us@gtplayer.com

www.gtplayer.com

1 YEAR

If you have any questions about the product, please contact us through the contact information on the left. We will try our best to solve your problem within 24H (except weekends and holidays).