重点校对项

1. 物料编码
2. 版面尺寸
3. 材质标注
4. 颜色标注
5. 客户型号
6. 产品名称
7. 产品参数
8. 电压功率
9. 单位符号
10. 认证标志
11. 回型标志
12. ROHS标志
13. 警语警语及字高
14. 控制面板及功能
15. 目录及页码
16. 商标LOGO

标准元素核对表（此表仅用于印刷品制作过程核对标准内容，非印刷内容）

认证图标	大于5mm　大于5mm　大于5mm　大于5mm　大于7mm　ETL有C或US或C+US　UL只有C+US或无　GS图标无高度要求，印刷可见即可　说明书、保修卡类
单位表述	直流电:V ⎓ 交流电:V~ 频率:Hz 功率:W 容量:mL/L 电流:A 压强:Pa/kPa/MPa 长度:mm/cm/m 时间:s/min/h 重量:kg
产地表述	MADE IN CHINA　Made in China　Made in P.R.C
变更要求	图纸变更需要核实变更内容点以及涉及的物料和MO单，尤其关注92的在途MO单

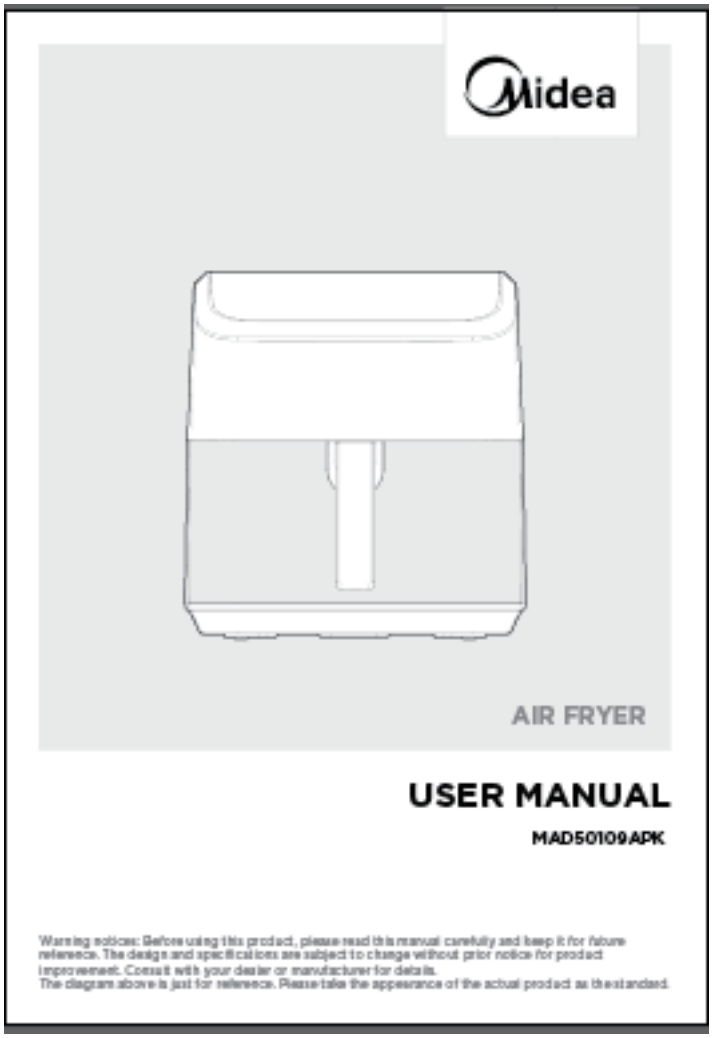

技术要求(版本号:B，2023-06)

1. 文字图案印刷颜色为：黑色，印刷字体需清晰可见，文字不能粘到一起；
2. 该说明书的幅面大小为：A5，未注直线尺寸公差应符合GB/T1804-v；
3. 该说明书的装订方式为：钉装；[70P以下为钉装，70P以上为胶装（特殊要求除外）]
4. 说明书警语及认证标志应满足CE/UL标准，CE：警语部分大写字母高度不低于3mm，CE标志不低于5mm，WEEE标志不低于7mm；UL：大写字母字高不小于1/12”（2.11mm），小写字母字高不小于1/16”（1.6mm），“IMPORTANT SAFEGUARDS”，“SAVE THESE INSTRUCTIONS”等词，其字高不小于3/16”（4.8mm），IMPORTANT SAFEGUARDS 必须在最前面。
5. 产品应符合QMG-J53.021《产品说明书技术条件》的有关要求。
6. 有ROHS指令要求的物料应符合美的企业标准QML-J11.006《产品中限制使用有害物质的技术标准》。

标记	处数	更改文件号	签字	日期

制图	刘灿	审核	李艳	图样标记	重量	比例
设计	-----	标准化	古广君	K		1:1
校对	-----	审定	古广君			
会签	-----	日期	2024-1-25	共 1 页	第 1 页	

空气炸锅

说明书

16161000A25119

MIDEA-MF-CN55K1（MAD50109APK）-0501

材料：80g双胶纸

广东美的生活电器制造有限公司

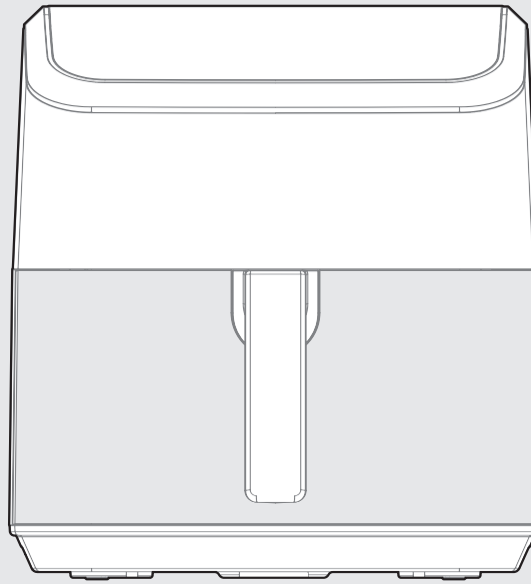

AIR FRYER

USER MANUAL

MAD50109APK

Warning notices: Before using this product, please read this manual carefully and keep it for future reference. The design and specifications are subject to change without prior notice for product improvement. Consult with your dealer or manufacturer for details.
The diagram above is just for reference. Please take the appearance of the actual product as the standard.

THANK YOU LETTER

Thank you for choosing Midea! Before using your new Midea product, please read this manual thoroughly to ensure that you know how to operate the features and functions that your new appliance offers in a safe way.

CONTENTS

THANK YOU LETTER 01

SAFETY INSTRUCTIONS 02

SPECIFICATIONS 06

PRODUCT OVERVIEW 07

OPERATION INSTRUCTIONS 08

CLEANING AND MAINTENANCE 11

TROUBLESHOOTING 12

TRADEMARKS, COPYRIGHTS AND LEGAL STATEMENT 14

DATA PROTECTION NOTICE 15

1 YEAR LIMITED WARRANTY 16

SAFETY INSTRUCTIONS

Intended Use

The following safety guidelines are intended to prevent unforeseen risks or damage from unsafe or incorrect operation of the appliance. Please check the packaging and appliance on arrival to make sure everything is intact to ensure safe operation. If you find any damage, please contact the retailer or dealer. Please note modifications or alterations to the appliance are not allowed for your safety concern. Unintended use may cause hazards and loss of warranty claims.

Explanation of Symbols

	**Danger** This symbol indicates that there are dangers to the life and health of persons due to extremely flammable gas.
	**Warning of electrical voltage** This symbol indicates that there is a danger to life and health of persons due to voltage.
	**Warning** The signal word indicates a hazard with a medium level of risk which, if not avoided, may result in death or serious injury.
	**Caution** The signal word indicates a hazard with a low degree of risk which, if not avoided, may result in minor or moderate injury.
	**Attention** The signal word indicates important information (e.g. damage to property), but not danger.
	**Observe instructions** This symbol indicates that a service technician should only operate and maintain this appliance in accordance with the operating instructions.

Read these operating instructions carefully and attentively before using/commissioning the unit and keep them in the immediate vicinity of the installation site or unit for later use!

IMPORTANT SAFEGUARDS

When using electrical appliances, basic safety precautions should always be followed including the following:

- Read all instructions.
- Do not operate any appliance with a damaged cord or plug or after the appliance malfunctions or has been damaged in any manner. Return appliance to the nearest authorized service facility for examination, repair, or adjustment.
- To protect against electrical shock do not immerse cord, plugs, or other live parts in water or other liquid.
- WARNING: To prevent electric shock, unplug before cleaning
- Do not touch hot surfaces. Use handles or knobs.
- Extreme caution must be used when moving an appliance containing hot oil or other hot liquids.
- Close supervision is necessary when any appliance is used by or near children.
- Do not use outdoors.Household use only.
- Unplug from outlet when not in use and before cleaning. Allow to cool before putting on or taking off parts.
- The use of accessory attachments not recommended by the appliance manufacturer may cause injuries.
- Do not let cord hang over edge of table or counter, or touch hot surfaces.
- Do not place on or near a hot gas or electric burner, or in a heated oven.
- Always attach plug to appliance first, then plug cord into the wall outlet. To disconnect, turn any control to “off”, then remove plug from wall outlet.
- Do not use appliance for other than intended use.

- Caution： To reduce the risk of electric shock, cook only in removable container
- Use extreme caution when removing tray or disposing of hot grease.
- Oversize foods or metal utensils must not be inserted in a toaster-oven as they may create a fire or risk of electric shock.
- A fire may occur if the toaster-oven is covered or touching flammable material, including curtains, draperies, walls, and the like, when in operation. Do not store any item on top of the appliance when in operation.
- Do not clean with metal scouring pads. Pieces can break off the pad and touch electrical parts involving a risk of electric shock.
- Extreme caution should be exercised when using containers constructed of other than metal or glass.
- Do not store any materials, other than manufacturers recommended accessories, in this oven when not in use.
- Do not place any of the following materials in the oven: (List all materials – that is, paper, cardboard, plastic, and the like).
- Do not cover crumb tray or any part of the oven with metal foil. This will cause overheating of the oven.
- A short power-supply cord is provided to reduce the risk resulting from becoming entangled in or tripping over a longer cord.
- Make sure the frying basket is locked into the front of the drawer – both frying basket handle tabs must be fully inserted into the notches on the top of the basket drawer.
- Always make sure frying basket drawer is fully closed, with frying basket handle locked securely in the drawer, while Air Fryer is in operation.

- WARNING: Air Fryer will not operate unless frying basket drawer is fully closed.
- CAUTION: After hot air frying, the frying basket and frying basket drawer and the cooked foods are hot. Extreme caution must be used when handling the hot Air Fryer basket/drawer.
- WARNING: After air frying, make sure to place the frying basket drawer on a flat, heat-resistant surface before pressing the basket release button.
- Do not cover the air inlet and the air outlet openings while the appliance is operating.
- Longer detachable power-supply cords or extension cords are available and may be used if care is exercised in their use.
  If a longer detachable power-supply cord or extension cord is used:
  - The marked electrical rating of the cord set or extension cord should be at least as great as the electrical rating of the appliance;
  - The cord should be arranged so that it will not drape over the countertop or tabletop where it can be pulled on by children or tripped over unintentionally; and
  - If the appliance is of the grounded type, the cord set or extension cord should be a grounding-type 3-wire cord.
- CAUTION: Hot surface when be used.
- This appliance has a polarized plug (one blade is wider than the other). To reduce the risk of electric shock, this plug is intended to fit into a polarized outlet only one way. If the plug does not fit fully into the outlet, reverse the plug. If it still does not fit, contact a qualified electrician. Do not attempt to modify the plug in any way.

SAVE THESE INSTRUCTIONS

SPECIFICATIONS

Product Model	**MAD50109APK**
Rated voltage	120V~
Rated frequency	60Hz
Rated power	1500W

PRODUCT OVERVIEW

Part Name

The product is subject to the actual product and configuration.

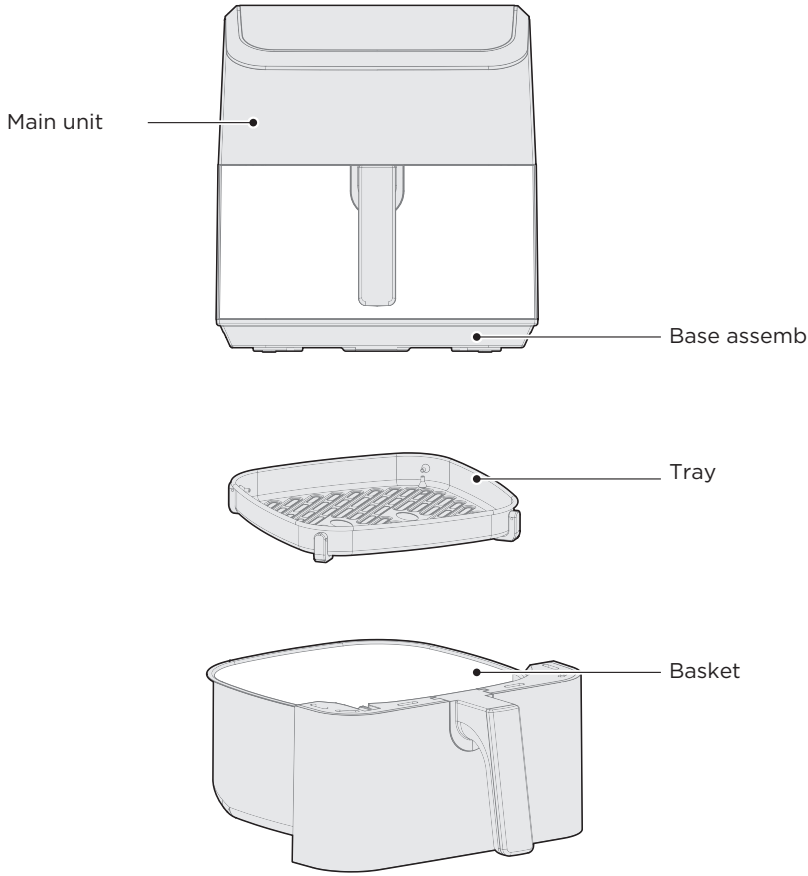

NOTE

The figure below is for reference only, and the details are subject to the actual objects in the packaging box.

OPERATION INSTRUCTIONS

Instructions for Use



1. Place the tray in the basket, and then add the ingredients; Push the basket into the main unit, make sure that the basket is fully pushed into the main unit;
2. In the off-screen state, only the START/PAUSE button blinks. Click START/PAUSE to enter the standby state. Click the desired menu function, and click TEMP+, TEMP-, TIME+, and TIME- to adjust the time and temperature. Click the START/PAUSE key to start the menu cooking, and the cooking countdown is displayed;
3. During cooking, click CANCEL to cancel the cooking state and return to standby; Click the “START/PAUSE” key to enter the cooking pause; Click TEMP+, TEMP-, TIME+, TIME- to enter the cooking menu parameter selection.
4. After cooking is finished, the display screen shows “START/PAUSE” button indicator flashing prompt, all other indicators off; At this point, the ingredients can be removed from basket.

⚠ Please carefully take it out. Do put it place down on counter so as to avoid being scalded by steam or topping over the basket which may lead to scalding by oil or high temperature food. In addition, the cooking tongs are suggested to be used in the process of taking out food.

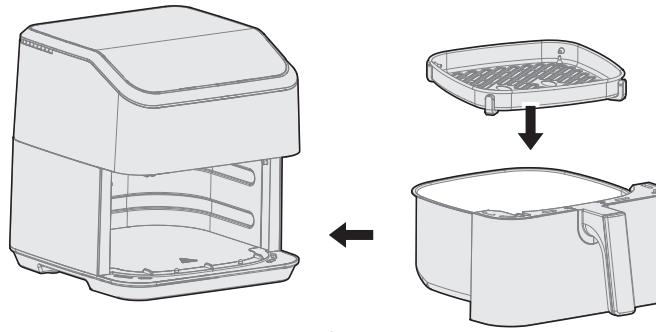

Menu Functions

The default menu pre-sets the heating temperature and time:				
Menu function	Temperature (F)		Time (Min)	
	Pre-setting	Adjustment range	Pre-setting	Adjustment range
Air Fry	390	300~400	20	1~90
Grill	400	300~400	15	1~30
Bake	325	250~400	15	1~240
Roast	375	250~400	15	1~240
Broil	400	300~400	10	1~30
Bagel	350	300~400	6	1~30
Reheat	350	300~400	15	1~30
FAV	390	100~400	20	1~90
Dehydrate	150	105~195	6h	1h~12h
Keep Warm	170	170~200	20	1~90

Preparation

The product should be stably placed on a flat surface (Figure 1), so that the power cord has a sufficient length to be plugged into the socket, and the air around the product should be kept in circulation, and should not be close to flammable items.

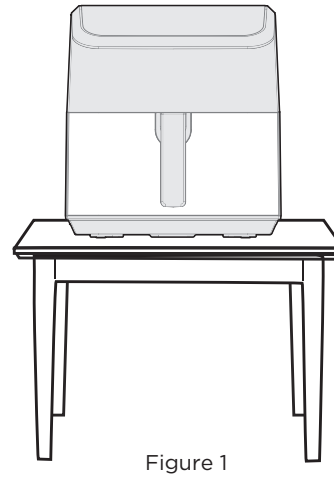

Figure 1

Reminder

- The first use requires 10 minutes of dry burning. A small amount of white smoke or odor may appear during the dry burning process, which is normal.
- Before the product works, please check whether the bakeware is in place to avoid malfunction.
- If you find that the product is malfunctioning, please stop using it and contact our service department immediately.
- Please use the bakeware and basket together in the whole machine, and avoid using them separately.
- After using, unplug the power plug and allow the air fryer to cool completely before moving.

CLEANING AND MAINTENANCE

- Please clean the air fryer to prevent it from being burned.
- After using, please clean the bakeware and basket in time to avoid the damage of the coating due to the erosion of food residue oil.
- Do not use strong abrasive cleaners to prevent damage to the machine and your health.
- Use a soft, clean cloth to wipe the air fryer. Please do not use an over-wet cloth to clean the air fryer, to prevent water from entering the air fryer, which may cause short circuit and fire.
- Please do not use other cleaning equipment such as a dishwasher to clean the air fryer, otherwise it may cause damage and affect the use.
- Use neutral detergent or clean water to clean the tray and basket.
- Please do not use hard and sharp items (such as wire balls, blades, etc.) to clean the bakeware or tray and basket to prevent scratching.
- Any other servicing should be performed by an authorized service representative.

TROUBLESHOOTING

Operation of your appliance can lead to errors and malfunctions. The following tables contain possible causes and notes for resolving an error message or malfunction. It is recommended to read the tables carefully below in order to save your time and money that may cost for calling to the service center.

Problem	Cause	Solution
The air fryer does not work	• The appliance is not plugged in.	Put the mains plug in an earthed wall socket.
	• You have not set the timer.	Turn the timer knob to the required preparation time to switch on the appliance.
	• The pan is not put into the appliance properly.	Slide the pan into the appliance properly.
The ingredients fried with the air fryer are not done.	• The amount of ingredients in the basket is too big.	Put smaller batches of ingredients in the basket.Smaller batches are fried more evenly.
	• The set temperature is too low.	Turn the temperature control key to the required temperature setting (see section 'settings' in chapter 'Using the appliance').
	• The preparation time is too short.	Turn the timer key to the required preparation time (see section 'Settings' in chapter 'Using the appliance').
The ingredients are fried unevenly in the air fryer.	• Certain types of ingredients need to be shaken halfway through the preparation time.	Ingredients that lie on top of or across each other (e.g.fries) need to be shaken halfway through the preparation time. See section'Settings' in chapter "Using the appliance'.
Fried snacks are not crispy when they come out of the air fryer.	• You used a type of snacks meant to be prepared in a traditional deep fryer.	Use oven snacks or lightly brush some oil onto the snacks for a crispier result.
I cannot slide the pan into the appliance properly.	• There are too much ingredients in the basket.	DO NOT fill the basket beyond in full, refer to the "Setting" table above.
	• The basket is not placed, in the pan correctly.	Push the basket down into the pan until you hear a click.

Problem	Cause	Solution
White smoke comes out of the appliance.	• You are preparing greasy ingredients.	When you fry greasy ingredients in the air fryer, a large amount of oil will leak into the pan. The oil produces white smoke and the pan may heat up more than usual. This does not affect the applianceor the end result.
	• The pan still contains grease residues from previous use.	White smoke is caused by grease heating up the pan. Make sure you clean the pan properly after each use.
Fresh fries are fried unevenly in the air fryer.	• You did not use the right potato type.	Use fresh potatoes and make sure they stay firm, during frying.
	• You did not rinse the potato sticks properly before you fried them.	Rinse the potato sticks properly to remove starch from the outside of the sticks.
Fresh fries are not crispy when they come out of the air fryer.	• The crispiness of the fries depends on the amount of oil and water in the fries.	Make sure you dry the potato sticks properly before you add the oil.
		Cut the potato sticks smaller for a crispier result.
		Add slightly more oil for a crispier result.

TRADEMARKS, COPYRIGHTS AND LEGAL STATEMENT

Midea logo, word marks, trade name, trade dress and all versions there of are valuable assets of Midea Group and/or its affiliates (“Midea”), to which Midea owns trademarks, copyrights and other intellectual property rights, and all goodwill derived from using any part of an Midea trademark. Use of Midea trademark for commercial purposes without the prior written consent of Midea may constitute trademark infringement or unfair competition in violation of relevant laws.

This manual is created by Midea and Midea reserves all copyrights thereof. No entity or individual may use, duplicate, modify, distribute in whole or in part this manual, or bundle or sell with other products without the prior written consent of Midea.

All the described functions and instructions were up to date at the time of printing this manual. However, the actual product may vary due to improved functions and designs.

-

DATA PROTECTION NOTICE

For the provision of the services agreed with the customer,
we agree to comply without restriction with all stipulations of applicable data protection law, in line with agreed countries within which services to the customer will be delivered, as well as, where applicable, the EU General Data Protection Regulation (GDPR).

Generally, our data processing is to fulfil our obligation under contract with you and for product safety reasons, to safeguard your rights in connection with warranty and product registration questions. In some cases, but only if appropriate data protection is ensured, personal data might be transferred to recipients located outside of the European Economic Area.

Further information are provided on request. You can contact our Data Protection Officer via **MideaDPO@midea.com**. To exercise your rights such as right to object your personal date being processed for direct marketing purposes, please contact us via **MideaDPO@midea.com**. To find further information, please follow the QR Code.

1 YEAR LIMITED WARRANTY

This is the only express warranty for this product and is in lieu of any other warranty or condition. This product is warranted to be (1) year from the date of original purchase. During this period, your exclusive remedy is repair or replacement of this product or any component found to be defective, at our option; however, you are responsible for all costs associated with returning the product to us and our returning the product or component under this warranty to you. If the product or component is no longer available, we will replace with a similar one of equal or greater value. This warranty does not cover wear from normal use, and damages to the product resulting from accident, alteration, abuse, or misuse. This warranty extends only to the original consumer purchaser or gift recipient. Keep the original sales. This warranty is void if products is used for other than single family household use or subjected to any voltage and waveform. We exclude all claims for special, incidental, and consequential damages by breach of express or implied warranty. All liability is limited to amount of the purchase price. Every implied warranty, including any statutory warranty or condition of merchantability prohibited by law, in which case such warranty or condition is limited to the duration of this written warranty. Legal rights that vary depending on where you live. Some states or provinces do not allow limitations on implied warranties or special, incidental consequential damages, so the foregoing limitations may not apply to you. Please note that failure to complete and submit this form does not diminish your warranty.

In the event of a warranty period claim, question, comments or if service is required for this product, please contact the Customer Service Center:

customerserviceusa@midea.com
1-866-646-4332

Midea

make yourself at home

www.midea.com

© Midea 2022 all rights reserved