NUUGARDEN USA

NUU GARDEN®

ENJOY LIFE · SHARE HAPPINESS

Nuu Garden Corp.
Add: 6366 Corley Road, Norcross GA 30071.
Tel: (800) 257-7108
Web: http://www.nuugarden.com
E-mail: service@nuugarden.com

NUU GARDEN®

ENJOY LIFE · SHARE HAPPINESS

INSTRUCTION MANUAL

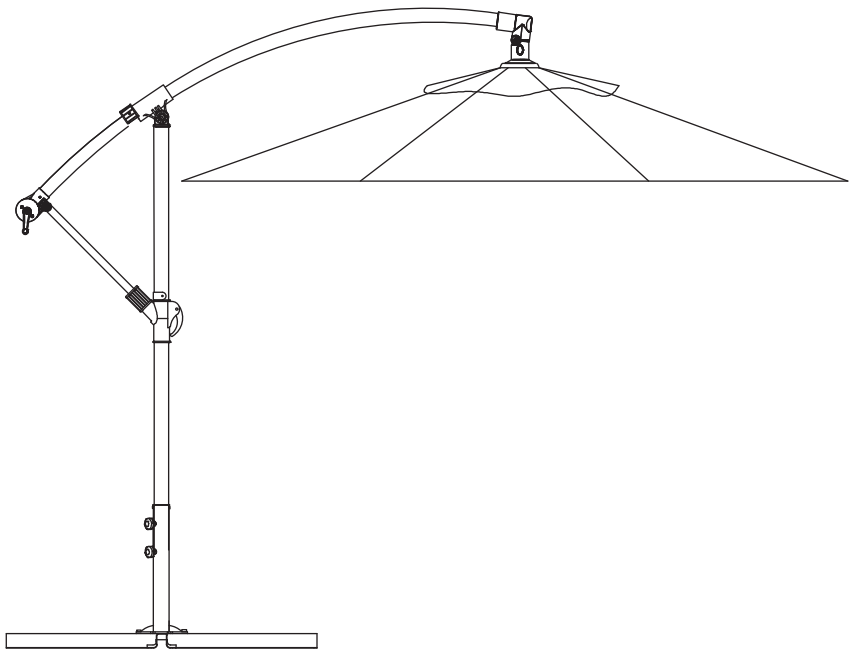

Outdoor LED Sunshade Umbrella

SKU：UU02-RD/UU02-GN/UU02-BE

INTRODUCTION

Thanks for purchasing and trusting NUUGARDEN with your home decorating plans. This product is a furniture designed and made by NUUGARDEN Corp.

We are committed to R&D innovation and to create the most refined, diverse choice of outdoor collection.

After unpacking and before every use, check whether the item shows any damages. In addition, check that you have all parts and hardwares before assembly. If there is any damage, please do not use and just call customer service at (800) 257-7108 or send an email to service@nuugarden.com. If you do not have all the parts lists, have your dealer contact us and they will be sent to you immediately.

This furniture is intended for indoor and outdoor use. Please take time to read and follow the instruction below. Use the item as described in this operating manual.We accept no liability for damages caused by improper use.

CUSTOMER SERVICE

Thanks for purchasing this NUUGARDEN furniture. We are here to help you maximize your enjoyment and appreciation of it.

Please do not hesitate to contact our customer service when you have any questions regarding assembly or accessories.

Add: 6366 Corley Road, Norcross, GA 30071.

Tel: (800) 257-7108

Web:http://www.nuugarden.com

E-mail: service@nuugarden.com

Service time: Mon-Fri, 8:30 AM-5:30 PM, EST

CARE AND MAINTENANCE

Follow the instruction for the material of your special product to make sure that it stays in the best shape for as long as possible.The information below is only intended as a general guideline. For more information, please contact us.

• Only need to rinse it thoroughly with clean water to wash away dirt and grime. Never use abrasive cleansers on the furniture, since it can attack the surfaces and leave behind scratch marks.

• For the stubborn grime and stains, just use a soft sponge and mild soapy water and then dry it with a cloth or paper towel.

• Check the stability of the screws, nuts and nut caps prior to each use. Tighten up them after one to two month's use whenever required.

• Avoid improper use, and be careful not to scratch or damage the surface with sharp objects.

• When you move your furniture, make sure you lift it rather than pulling or pushing it to avoid damaging the foor, legs and mounting.

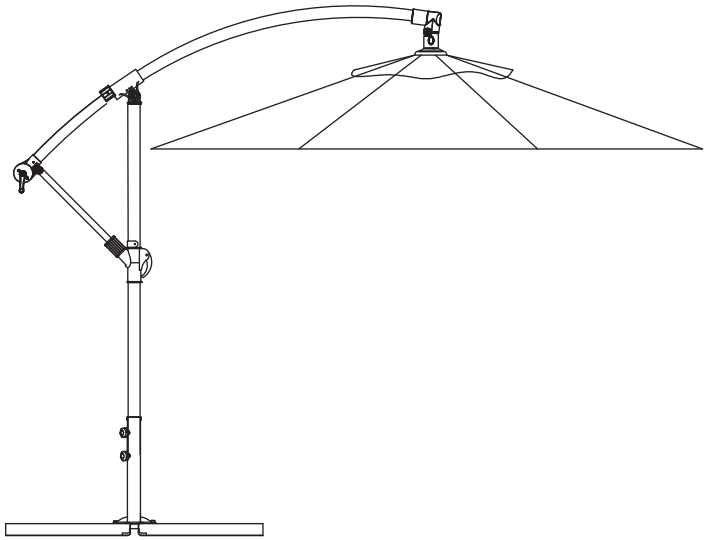

ASSEMBLY INSTRUCTIONS

Step1: Stack the base (D) and the base (C), and then attach the tube (B) to the base (DC) using 4 washers (F) and 4 screws (E), and use wrench (G) tighten them in clockwise.

Step 2: Swing the hand clockwise to tighten the umbrella rope, and connect the upper and lower pipes at the bend, insert the umbrella hanger into the bend base, finally, insert the wire into the solar (I) and fix it in a fixed position.

Step 3: Insert the shaft into the tube (B), and turn the knob (H) clockwise to tighten.

Step 4: Open the spanner (2), push the sliding base into the vertical rod retaining ring, and press the spanner (2)

Step 5: Turn the umbrella shaker clockwise and the switch is located on the end of the umbrella rib.

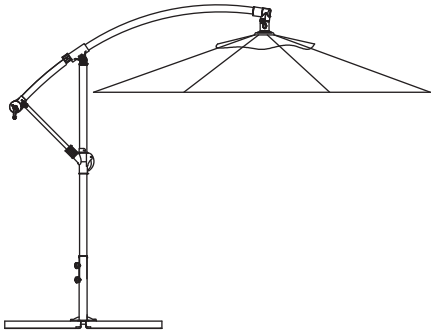

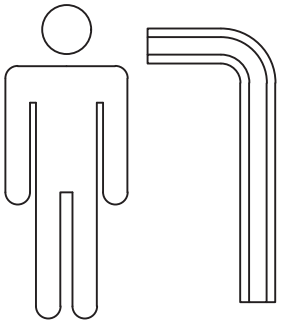

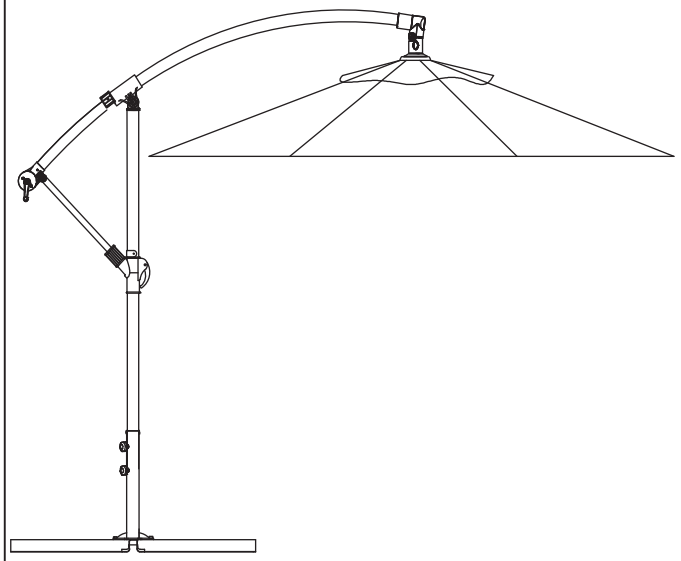

Part Number	Images and Sizes	Qty.
A		1
B		1
C		1
D		1
E		4
F		4
G		1
H		2
I		1

9

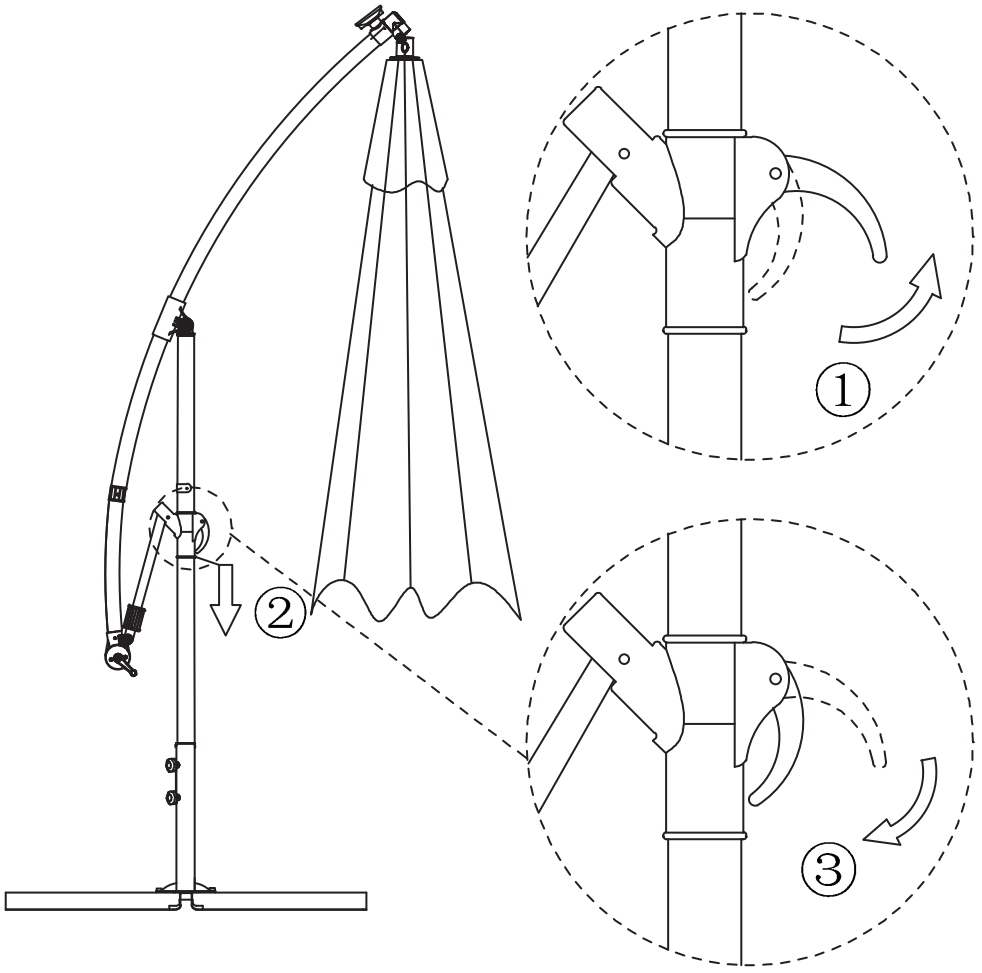

8

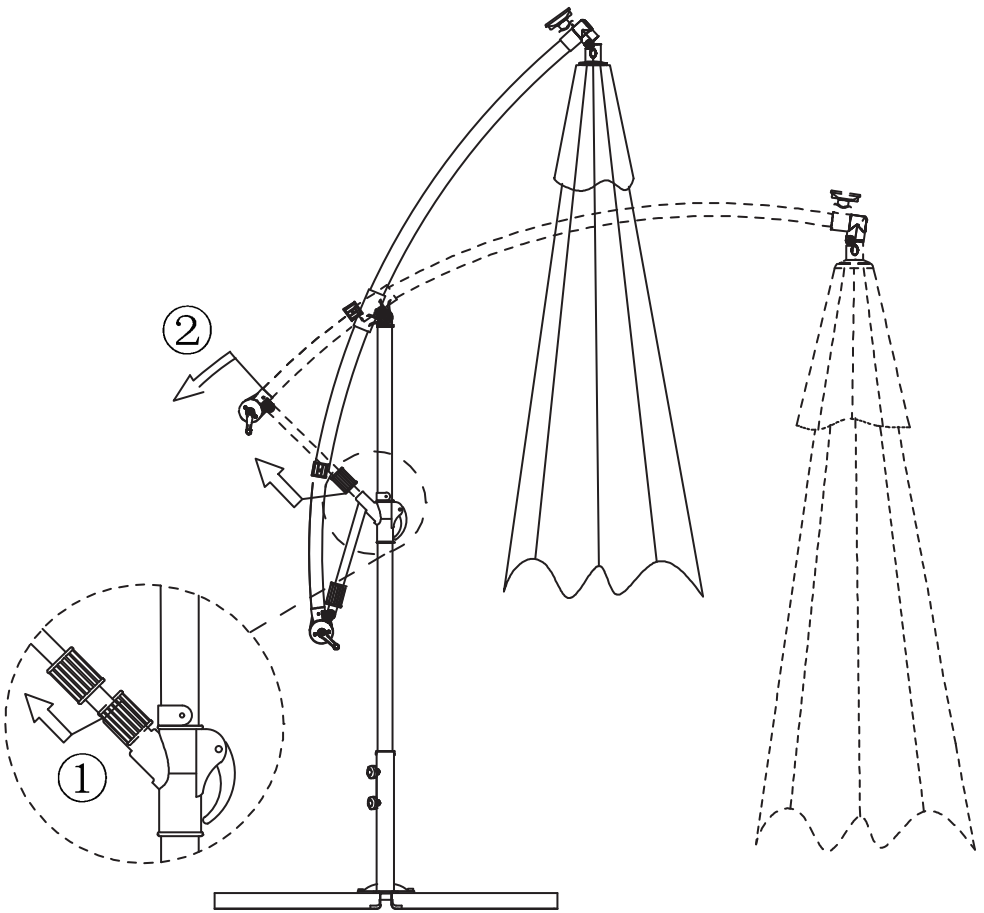

1

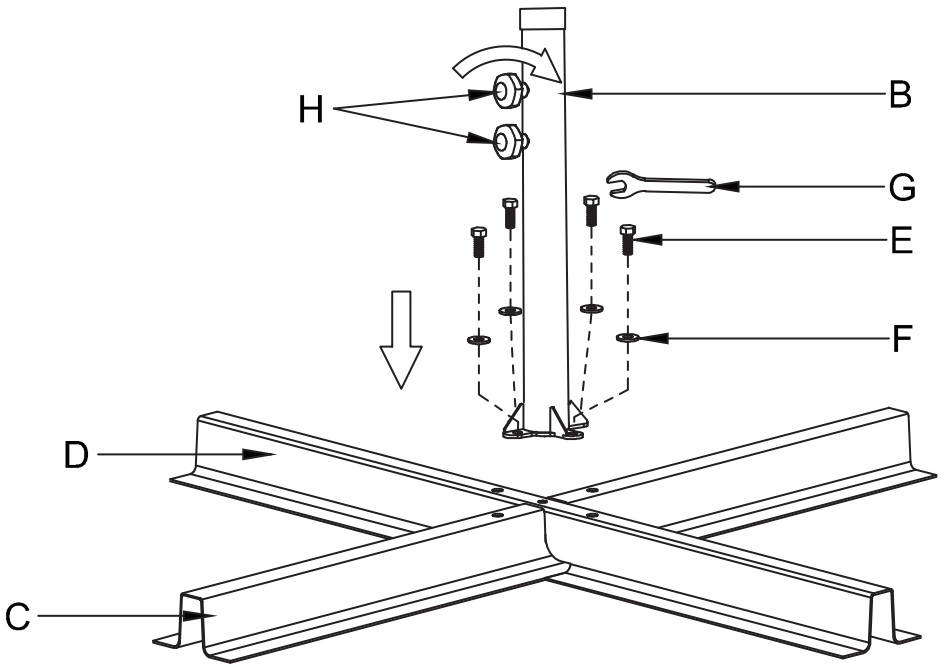

2

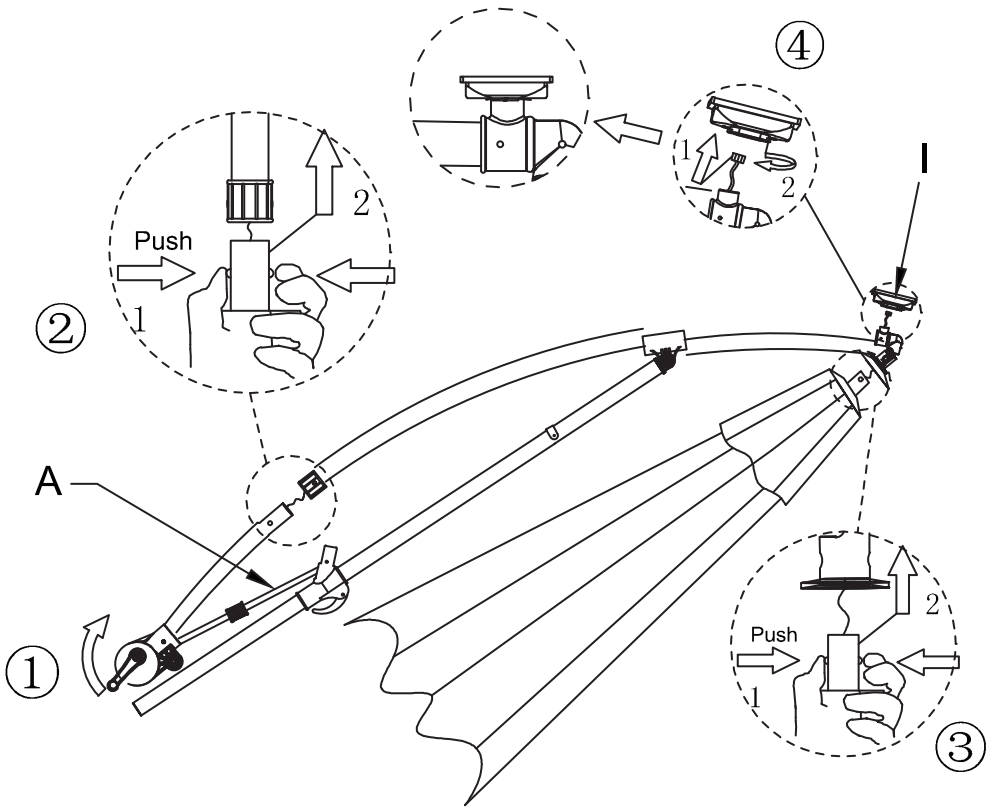

7

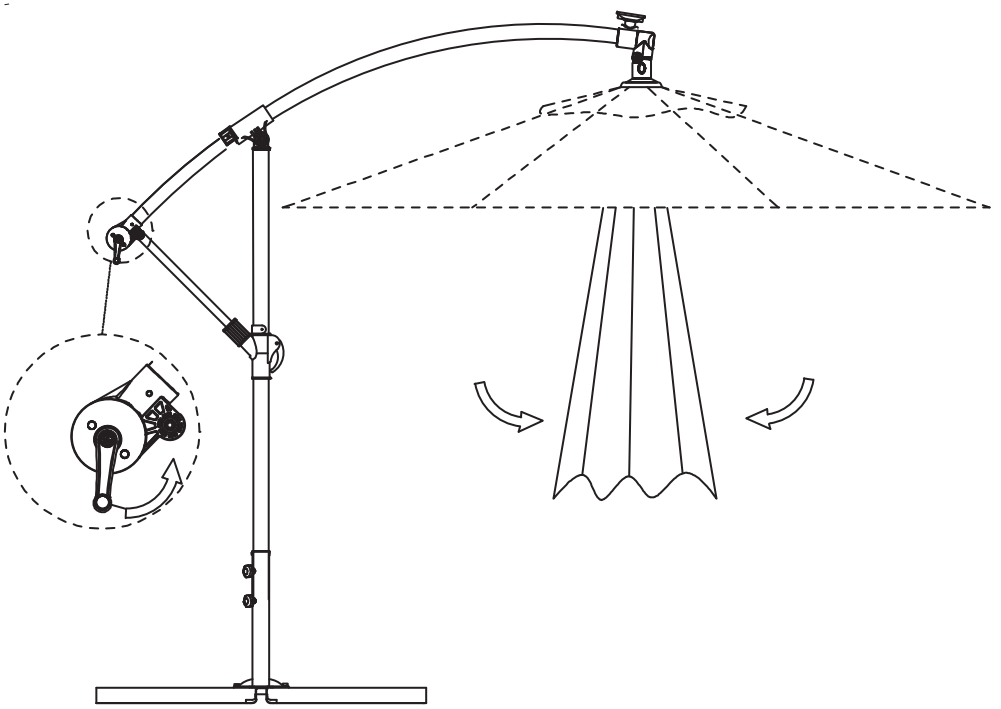

6

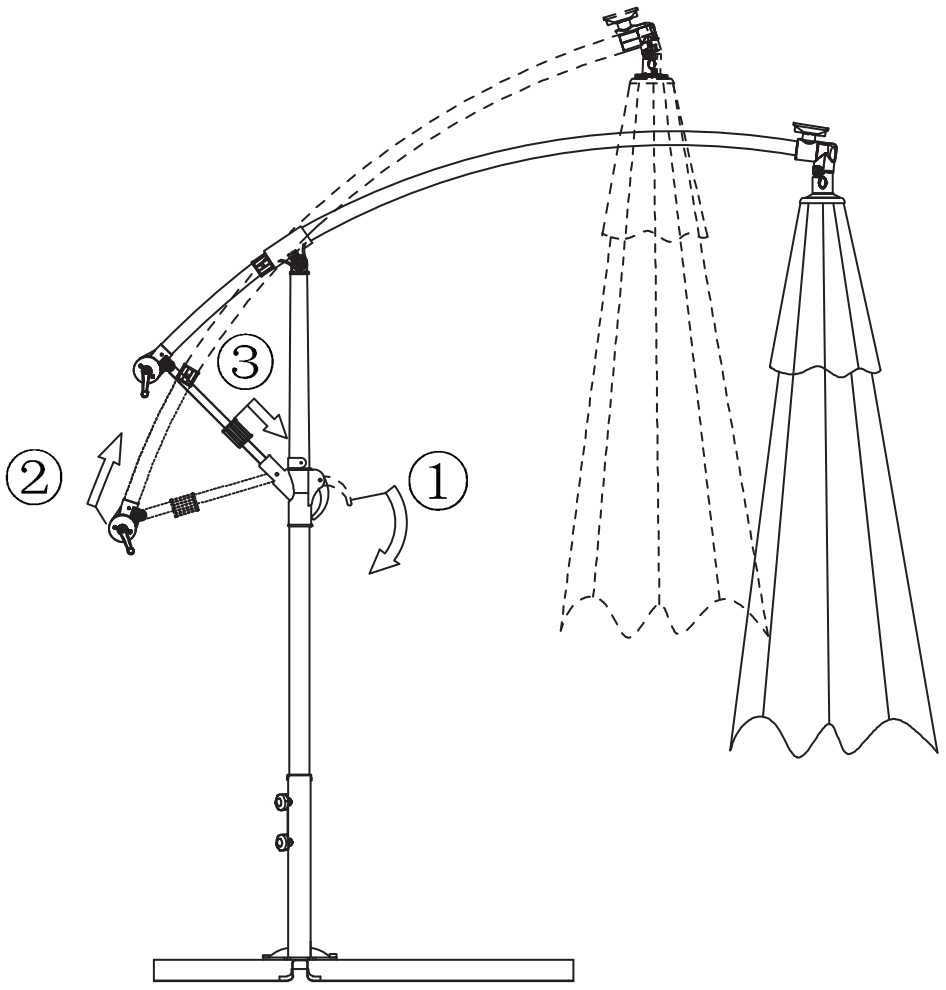

3

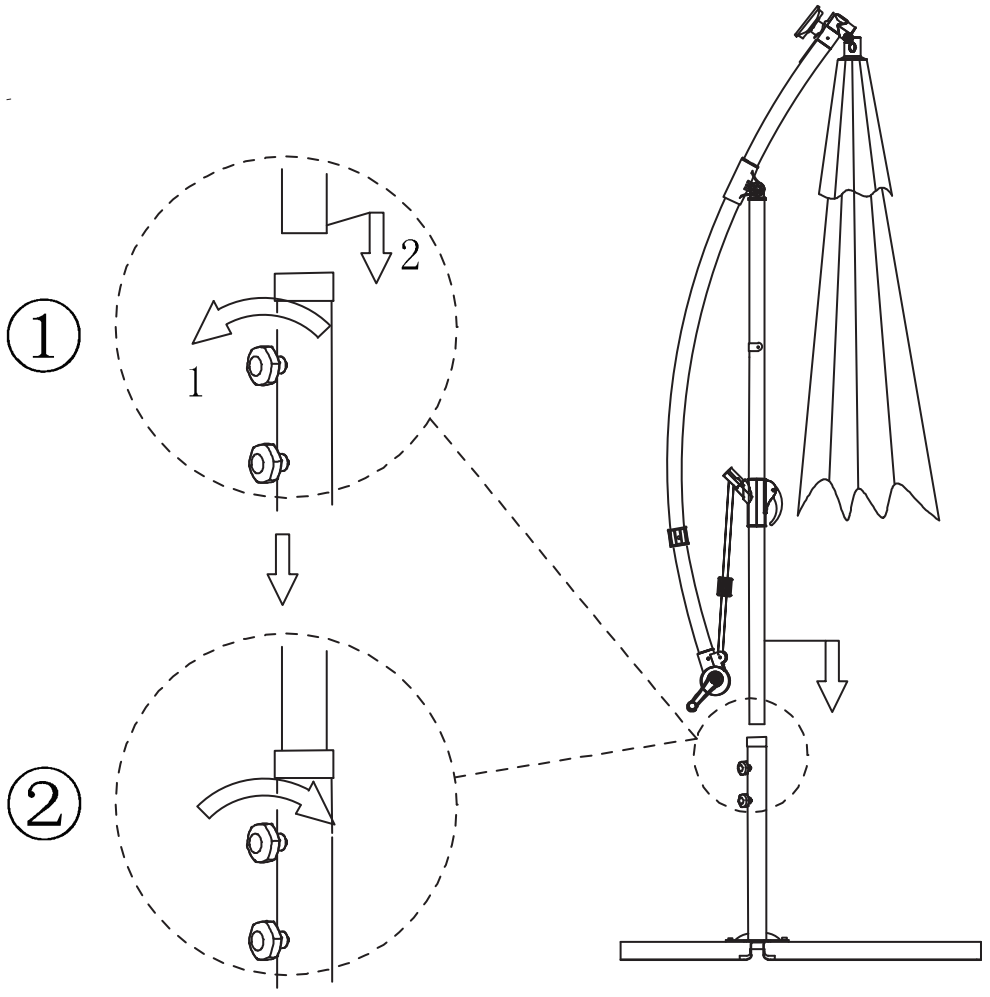

4

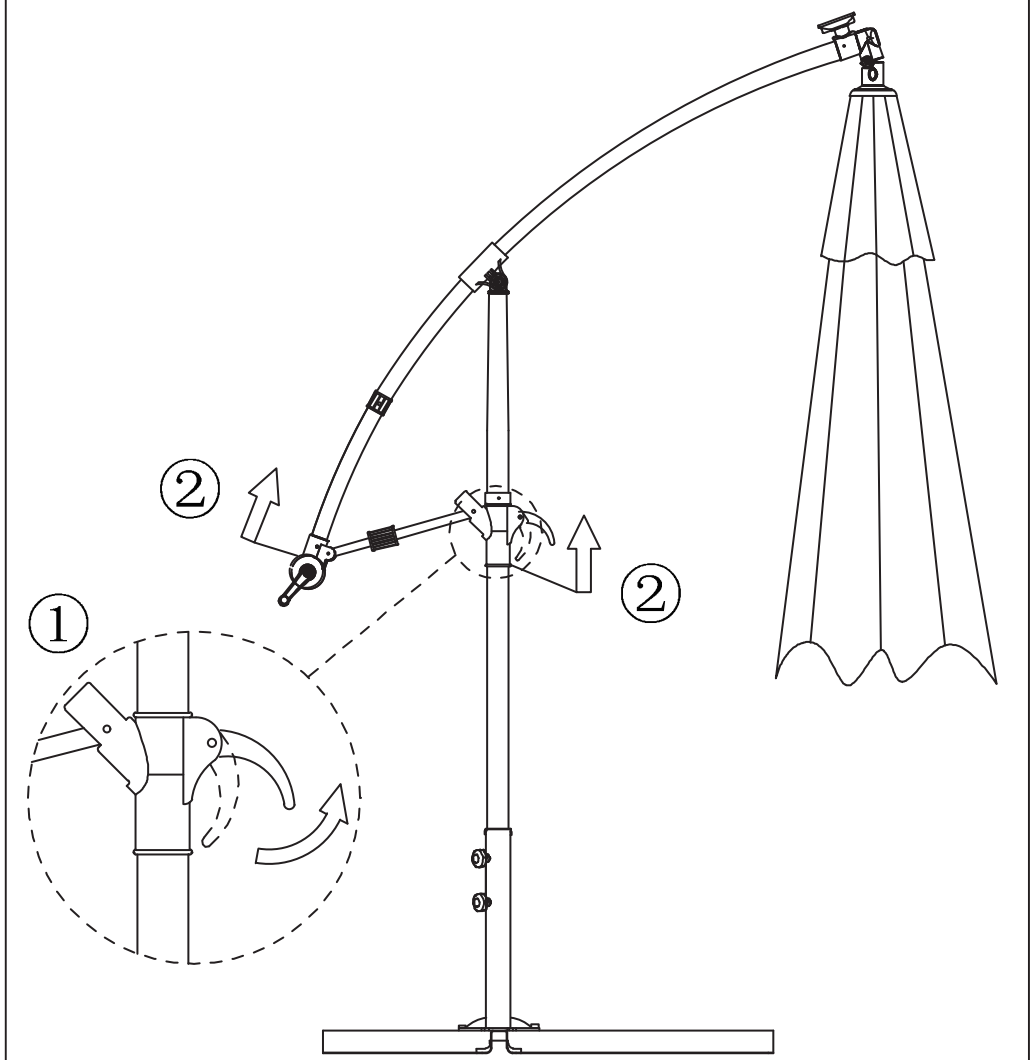
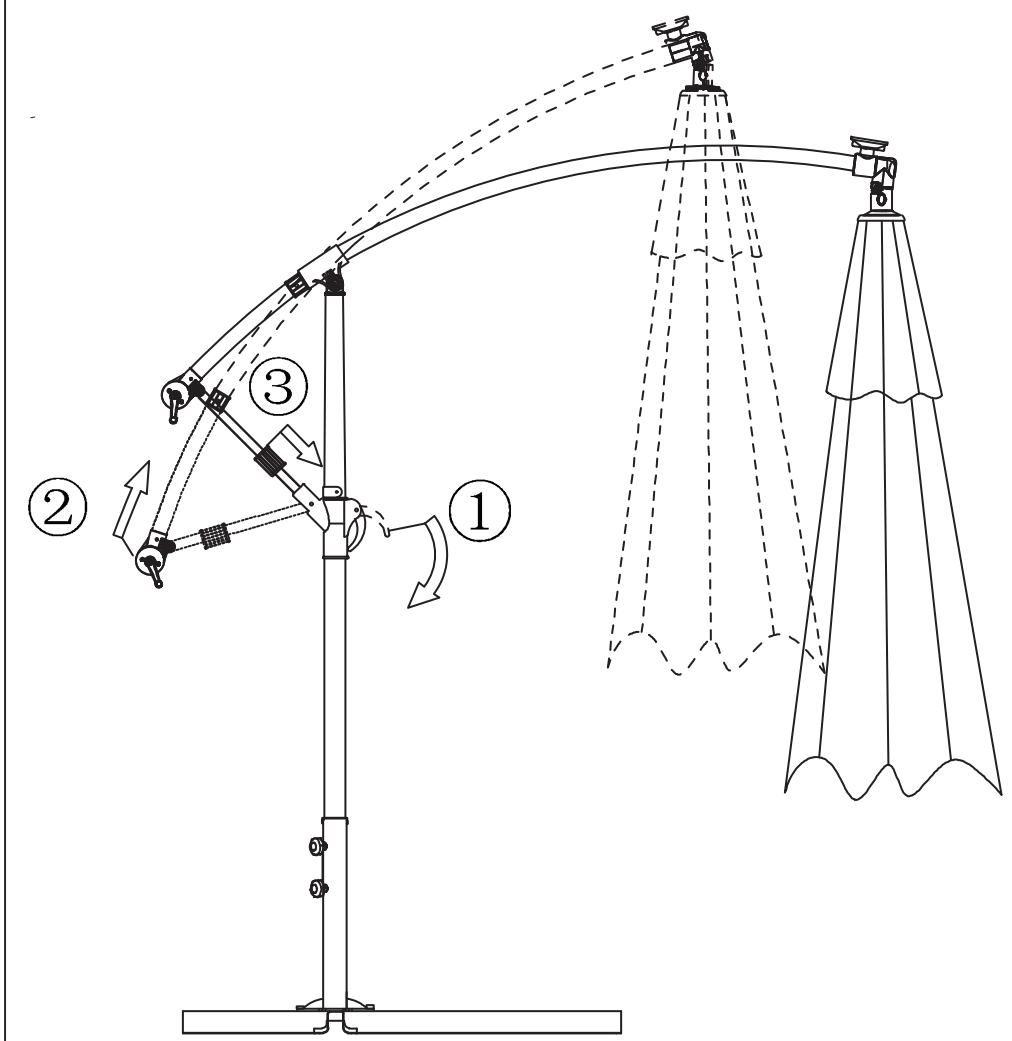
5