OPERATOR'S MANUAL

MODEL #100882
CULTIVATOR

REGISTER YOUR PRODUCT ONLINE

at **championpowerequipment.com**

1·877·338·0999

or visit **championpowerequipment.com**

SAVE THESE INSTRUCTIONS. This manual contains important safety precautions which should be read and understood before operating the product. Failure to do so could result in serious injury. This manual should remain with the product.

Specifications, descriptions and illustrations in this manual are as accurate as known at the time of publication, but are subject to change without notice.

REV 20221208

Champion Power Equipment, Inc., Santa Fe Springs, CA USA

TABLE OF CONTENTS

Introduction **3**

Safety Definitions **3**

Important Safety Instructions **4**

Things to Do 4
Things Not to Do 5
Fuel Safety 6
Safety and Dataplate Labels 7
Safety Symbols 8
Operation Symbols 9
Quickstart Label Symbols 9

Controls and Features **10**

Cultivator 10
Parts Included 11

Assembly **12**

Tine Installation or Reinstallation 12
Wheel Assembly 12
Handle Assembly 13
Add Fuel 13

Operation **14**

Starting and Stopping 14
To Stop the Engine 15
Special Feature (with Idle Set Properly and the Engine Running). 15
Tips for Extending Engine Life 15
Cultivating 16

Maintenance **17**

How to Check, Clean and Change the Air Filter 17
Cleaning Air Filter 17
Idle Speed Adjustment 17
Clear Blockages From the Fuel Line & Filter 17
Spark Plug 17
Muffler 17
Intake Air Cooling Vent 18
Procedures to be Performed After Every 100 Hours of Use 18
Maintenance Schedule 18

Storage **19**

Cultivator Storage 19
How to Prepare Your Cultivator for Restarting 19
Re-Starting Problems After Storage 19

Specifications **20**

Cultivator Specifications 20
Engine Specifications 20

Troubleshooting **21**

INTRODUCTION

Congratulations on your purchase of a Champion Power Equipment (CPE) product. CPE designs, builds, and supports all of our products to strict specifications and guidelines. With proper product knowledge, safe use, and regular maintenance, this product should bring years of satisfying service.

Every effort has been made to ensure the accuracy and completeness of the information in this manual at the time of publication, and we reserve the right to change, alter and/or improve the product and this document at any time without prior notice.

CPE highly values how our products are designed, manufactured, operated, and serviced as well as providing safety to the operator and those around the cultivator. Therefore, it is IMPORTANT to review this product manual and other product materials thoroughly and be fully aware and knowledgeable of the assembly, operation, dangers and maintenance of the product before use. Fully familiarize yourself, and make sure others who plan on operating the product fully familiarize themselves too, with the proper safety and operation procedures before each use. Please always exercise common sense and always err on the side of caution when operating the product to ensure no accident, property damage, or injury occurs. We want you to continue to use and be satisfied with your CPE product for years to come.

When contacting CPE about parts and/or service, you will need to supply the complete model and serial numbers of your product. Transcribe the information found on your product's nameplate label to the table below

CPE TECHNICAL SUPPORT TEAM
1-877-338-0999
MODEL NUMBER
100882
SERIAL NUMBER
DATE OF PURCHASE
PURCHASE LOCATION

SAFETY DEFINITIONS

The purpose of safety symbols is to attract your attention to possible dangers. The safety symbols, and their explanations, deserve your careful attention and understanding. The safety warnings do not by themselves eliminate any danger. The instructions or warnings they give are not substitutes for proper accident prevention measures.

⚠ DANGER

DANGER indicates a hazardous situation which, if not avoided, will result in death or serious injury.

⚠ WARNING

WARNING indicates a hazardous situation which, if not avoided, could result in death or serious injury.

⚠ CAUTION

CAUTION indicates a hazardous situation which, if not avoided, could result in minor or moderate injury.

NOTICE

NOTICE indicates information considered important, but not hazard-related (e.g., messages relating to property damage).

IMPORTANT SAFETY INSTRUCTIONS

⚠ WARNING

Cancer and Reproductive Harm – www.P65Warnings.ca.gov

⚠ DANGER

Using an engine indoors **CAN KILL YOU IN MINUTES**. Engine exhaust contains carbon monoxide. This is a poison you cannot see or smell.

NEVER use inside a home or garage, **EVEN IF** doors and windows are open.

ONLY use **OUTSIDE** and far away from windows, doors, and vents.

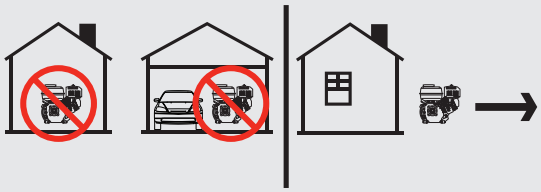

Install battery-operated carbon monoxide alarms or plug-in carbon monoxide alarms with battery back-up according to the manufacturer's instructions.

⚠ DANGER

Rotating parts can entangle hands, feet, hair, clothing and/or accessories. Traumatic amputation or severe laceration can result.

Keep hands and feet away from rotating parts. Tie up long hair and remove jewelry. Operate equipment with guards in place. DO NOT wear loose-fitting clothing, dangling drawstrings or items that could become caught.

⚠ DANGER

Sparks can result in fire or electrical shock.

When servicing the engine:

– Disconnect the spark plug wire and place it where it cannot contact the plug. DO NOT check for spark with the plug removed. Use only approved spark plug testers.

⚠ WARNING

Running engines produce heat. Severe burns can occur on contact. Combustible material can catch fire on contact.

DO NOT touch hot surfaces. Avoid contact with hot exhaust gases. Allow equipment to cool before touching. Maintain at least 3 ft. (91.4 cm) of clearance on all sides to ensure adequate cooling. Maintain at least 5 ft. (1.5 m) of clearance from combustible materials.

⚠ WARNING

Rapid retraction of the starter cord will pull hand and arm towards the engine faster than you can let go. Unintentional startup can result in entanglement, traumatic amputation or laceration. Broken bones, fractures, bruises or sprains could result.

When starting engine, pull the starter cord slowly until resistance is felt and then pull rapidly to avoid kickback.

Things to Do

– Always keep a firm grip on both handles while the tines are moving and/or the engine is running.
BE AWARE!! The tines may coast after throttle trigger is released. Make sure tines have come to a complete stop and engine is off before letting go of the cultivator handles.

– Always maintain a firm footing and good balance.
Do not overreach while operating the cultivator. Before you start to use the cultivator, check the work area for obstacles that might cause you to lose your footing, balance or control of the machine.

– Thoroughly inspect the area where equipment is to be used and remove all objects, that can be thrown by the machine or cause it to jam.

– Keep all bystanders, children, and pets at least 50 ft. (15.2 m) away.

– Always stay alert. Watch what you are doing and use common sense. Do not operate unit when fatigued.

– Always dress properly. Do not wear loose clothing or jewelry, they might get caught in moving parts. Use sturdy gloves. Gloves reduce the transmission of vibration to your hands. Prolonged exposure to vibration can cause numbness, fatigue and other ailments.

– While working, always wear substantial footwear and long trousers. Do not operate the equipment when barefoot or wearing open sandals.

– Always wear ear and eye protection. Eye protection must meet ANSI Z87.1. To avoid hearing damage, we recommend hearing protection be worn whenever using the equipment.

- To reduce fire hazard, keep the engine, and petrol/gas storage area free of vegetative material and excessive grease.
- Start the engine carefully, according to the instructions and with feet well away from the tines.
- Always operate the cultivator with good visibility
- Keep all nuts, bolts and screws tight to be sure the equipment is in safe working condition.
- Use extreme caution when reversing or pulling the machine towards you.
- Stop the engine and disconnect the spark plug before unclogging the tines and when making any repairs, adjustments, or inspections.
- Work only in daylight or good artificial light.
- Always be sure of your footing on slopes.
- Exercise extreme caution when changing direction on slopes.
- Always keep a safe distance between two or more people when working together.
- Always inspect your unit before each use and ensure that all handles, guards and fasteners are secure, operating, and in place.
- Always maintain and examine your cultivator with care. Follow maintenance instructions given in manual.
- Always use fresh gasoline. Stale gasoline can cause engine damage.
- Always store fuel in containers specifically designed for that purpose.
- Always pull starter cord slowly until resistance is felt. Then pull cord rapidly to avoid kickback and prevent arm or hand injury.
- Stop the engine whenever you leave the machine.
- Allow the engine to cool before storing in any enclosure.
- If the fuel tank needs to be drained, this should be done outdoors.

Things Not to Do

- Don’t use the cultivator with one hand. Keep both hands on the handles with fingers and thumbs encircling the handles while tines are moving and engine is running.
- Don’t put hands or feet near or under tines.
- Do not use near underground electric cables, telephone lines, pipes, or hoses. If in doubt, contact your utility or telephone company to locate underground services.
- Don’t overreach. Keep a good footing at all times.
- Don’t run with the machine only walk.
- Don’t work on excessively steep slopes.
- Don’t attempt to clear tines while they are moving. Never try to remove jammed material before switching the engine off and making sure the tines have stopped completely.
- Don’t allow children to operate this cultivator.
- Don’t allow adults to operate the equipment without proper instruction.
- Don’t operate while under the influence of alcohol or drugs.
- Don’t fuel, refuel or check fuel while smoking, or near an open flame or other ignition source. Stop engine and be sure it is cool before refueling.
- Don’t leave the engine running while the cultivator is unattended. Stop engine before putting the cultivator down or while transporting from one place to another.
- Don’t refuel, start or run this cultivator indoors or in an improperly ventilated area.
- Don’t run engine when electrical system causes spark outside the cylinder. During periodic checks of the spark plug, keep plug a safe distance from cylinder to avoid burning of evaporated fuel from cylinder.
- Don’t check for spark with spark plug or plug wire removed. Use an approved tester.
- Don’t crank engine with spark plug removed unless spark plug wire is disconnected. Sparks can ignite fumes.
- Don’t run engine when the odor of gasoline is present or other explosive conditions exist.
- Don’t operate the unit if gasoline is spilled. Clean up spill completely before starting engine.
- Don’t operate your cultivator if there is an accumulation of debris around the muffler, and cooling fins.
- Don’t touch hot mufflers, cylinders or cooling fins as contact may cause serious burns.
- Don’t change the engine governor setting or over speed the engine.

Fuel Safety

⚠ DANGER

GASOLINE AND GASOLINE VAPORS ARE HIGHLY FLAMMABLE AND EXPLOSIVE.

Fire or explosion can cause severe burns or death.

Gasoline and gasoline vapors:

- Gasoline is highly flammable and explosive.
- Gasoline can cause a fire or explosion if ignited.
- Gasoline is a liquid fuel but it's vapors can ignite.
- Gasoline is a skin irritant and needs to be cleaned up immediately if spilled on skin or clothes.
- Gasoline has a distinctive odor, this will help detect potential leaks quickly.
- Gasoline expands or contracts with ambient temperatures. Never fill the gasoline tank to full capacity, as gasoline needs room to expand when temperatures rise.
- In the case of any petroleum gasoline fire, flames should never be extinguished unless the fuel supply valve can be turned OFF. By not doing so, if a fire is extinguished and the supply of fuel is not turned OFF, an explosion hazard could be created.

When adding or removing gasoline:

- DO NOT light or smoke cigarettes.
- Always turn the engine off and let cool for a minimum of two minutes before removing the gasoline cap. Afterwards, loosen gasoline cap to relieve pressure from the gasoline tank.
- Only fill or drain gasoline outdoors in a well-ventilated area.
- DO NOT pump gasoline directly into the engine at the gas station. Always use an approved fuel container to transfer the gasoline to the engine.
- DO NOT overfill the gasoline tank.
- Always keep gasoline away from sparks, open flames, pilot lights, heat and other sources of ignition.

When starting the cultivator:

- DO NOT attempt to start a damaged engine.
- Always make certain that the gasoline cap, air filter, spark plug, fuel lines and exhaust system are properly secured, connected and in place.
- Always allow spilled gasoline to evaporate fully before attempting to start the engine.
- Make certain that the cultivator is resting firmly on level ground.

When operating the cultivator:

- DO NOT move or tip the cultivator during operation.
- DO NOT tip the cultivator or allow fuel or oil to spill.

When transporting or servicing the cultivator:

- Make certain that the fuel valve is in the OFF position and the gasoline tank is empty.
- Disconnect the spark plug wire.

When storing the cultivator:

- Store away from sparks, open flames, pilot lights, heat and other sources of ignition.
- Do not store cultivator or gasoline near furnaces, water heaters, or any other appliances that produce heat or have automatic ignitions.

⚠ WARNING

Never use a gasoline container, gasoline tank, or any other fuel item that is broken, cut, torn or damaged.

Safety and Dataplate Labels

These labels warn you of potential hazards that can cause serious injury. Read them carefully.

If a label comes off or becomes hard to read, contact Technical Support Team for possible replacement.

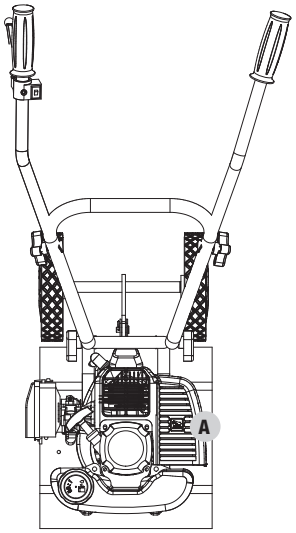

Top

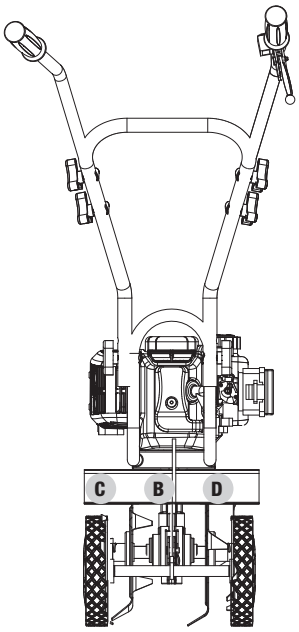

Back

	LABEL	DESCRIPTION
A	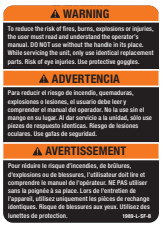 WARNING To reduce the risk of fires, burns, explosions or injuries, the user must read and understand the operator's manual. DO NOT use without the handle in its place. While servicing the unit, only use identical replacement parts. Risk of eye injuries. Use protective goggles. ADVERTENCIA Para reducir el riesgo de incendio, quemaduras, explosiones o lesiones, el usuario debe leer y comprender el manual del operador. No la use sin el mango en su lugar. Al dar servicio a la unidad, sólo use piezas de respuesto idénticas. Riesgo de lesiones oculares. Use gafas de seguridad. AVERTISSEMENT Pour réduire le risque d'incendies, de brûlures, d'explosions ou de blessures, l'utilisateur doit lire et comprendre le manuel de l'opérateur. NE PAS utiliser sans la poignée à sa place. Lors de l'entretien de l'appareil, utilisez uniquement les pièces de rechange identiques. Risque de blessures aux yeux. Utilisez des lunettes de protection. 1988-L-SF-B	Injury Risk
B		Safety Icons
C	WARNING Operation of this equipment may create sparks that can start fires around dry vegetation. A spark arrestor may be required. The operator should contact local fire agencies for laws or regulations relating to fire prevention requirements. ADVERTENCIA Operación de este equipo puede crear chispas que pueden iniciar incendios en vegetación seca. Un parachispas puede ser requerido. El operador debería contactar las agencias locales de incendios para leyes o regulaciones relacionadas con requisitos de prevención de incendios. AVERTISSEMENT Le fonctionnement de cet équipement peut créer des étincelles qui peuvent déclencher des incendies autour de la végétation sèche. Un pare-étincelles peut être nécessaire. L'utilisateur doit communiquer avec le service d'incendie local pour les lois et les règlements relatifs à la prévention des incendies. 1047-L-SF-C	Combustion
D	CHAMPION POWER EQUIPMENT, INC. 12039 SMITH AVENUE SANTA FE SPRINGS, CA 90670 USA / É.-U. 1-877-338-0999 WWW.CHAMPIONPOWEREQUIPMENT.COM MADE IN CHINA / FABRIQUÉ EN CHINE 277-L-PR-A MODEL / MODÈLE: 100882 SERIAL NO. / N° DE SÉRIE: XXXXXXXXXXXX MANUFACTURE DATE / DATE DE FABRICATION: XXXX ENGINE NO. / N° DE MOTEUR: 1E40F-2E DISPLACEMENT / CYLINDRE: 43cc TYPE / TYPE: 2-STROKE START / DÉMARRAGE: RECOIL FUEL:OIL / CARBURANT : HUILE: 50:1	Dataplate

Safety Symbols

Some of the following symbols may be used on this product. Please study them and learn their meaning. Proper interpretation of these symbols will allow you to more safely operate the product.

SYMBOL	MEANING
	Read Operator's Manual. To reduce the risk of injury, user must read and understand operator's manual before using this product.
	Eye and Ear Protection. Always wear safety goggles or safety glasses with side shields, and as necessary a full face-shield as well as full ear protection when operating this product. Always wear eye protection with side shields marked to comply with ANSI Z87.1.
	Safety Alert. This machine was built to be operated according to the safe operation practices in this manual. As with any type of power equipment, carelessness or error on the part of the operator can result in serious injury. This machine is capable of amputating fingers, hands, toes and feet and throwing foreign objects. Failure to observe the safety instructions could result in serious injury or death.
	Rotating Tines. Avoid injury from rotating tines. Keep hands away.
	Rotating Tines. Avoid injury from rotating tines. Keep feet away.
	Hot Surface. To reduce the risk of injury or damage, avoid contact with any hot surface.
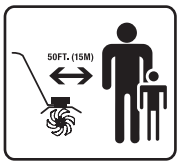	**Clearance.** Keep all objects including others at least 50 feet (15 m) from this machine. Only one person should operate the cultivator.

Operation Symbols

Some of the following symbols may be used on this product. Please study them and learn their meaning. Proper interpretation of these symbols will allow you to more safely operate the product.

SYMBOL	MEANING
	Choke
	Run
	Throttle Lever: FAST
	Engine ON / START / RUN
	Engine OFF or STOP

SYMBOL	MEANING
	Throttle Lever: SLOW
	Hand placement

Quickstart Label Symbols

Some of the following symbols may be used on this product. Please study them and learn their meaning. Proper interpretation of these symbols will allow you to more safely operate the product.

Starting the Engine

1. **Check fuel.** Make sure fuel-to-oil mixture is 50:1 and add if necessary.
2. **Primer bulb:**
   2a. For cold starts, press primer bulb 7-10 times.
   2b. For warm starts, DO NOT press primer bulb.
3. **Choke Lever:**
   3a. For cold starts, move the **choke lever** to the “CHOKE” position.
   3b. For warm starts, DO NOT move the **choke lever** to the “CHOKE” position.
4. Holding the unit firmly, pull **starter handle** until the engine starts.
5. **Throttle:**
   5a. For cold start, slowly move the **throttle lever** to half throttle and hold for 30 seconds.
   5b. For hot start, move to step 6.
6. Move the **throttle lever** to full throttle.

Stopping the Engine

1. Press the **engine switch** to the “OFF” position

NOTICE

See complete starting instructions on page 14 of this Operator’s Manual.

CONTROLS AND FEATURES

Read this operator's manual before operating your cultivator. Familiarize yourself with the location and function of the controls and features. Save this manual for future reference.

Cultivator

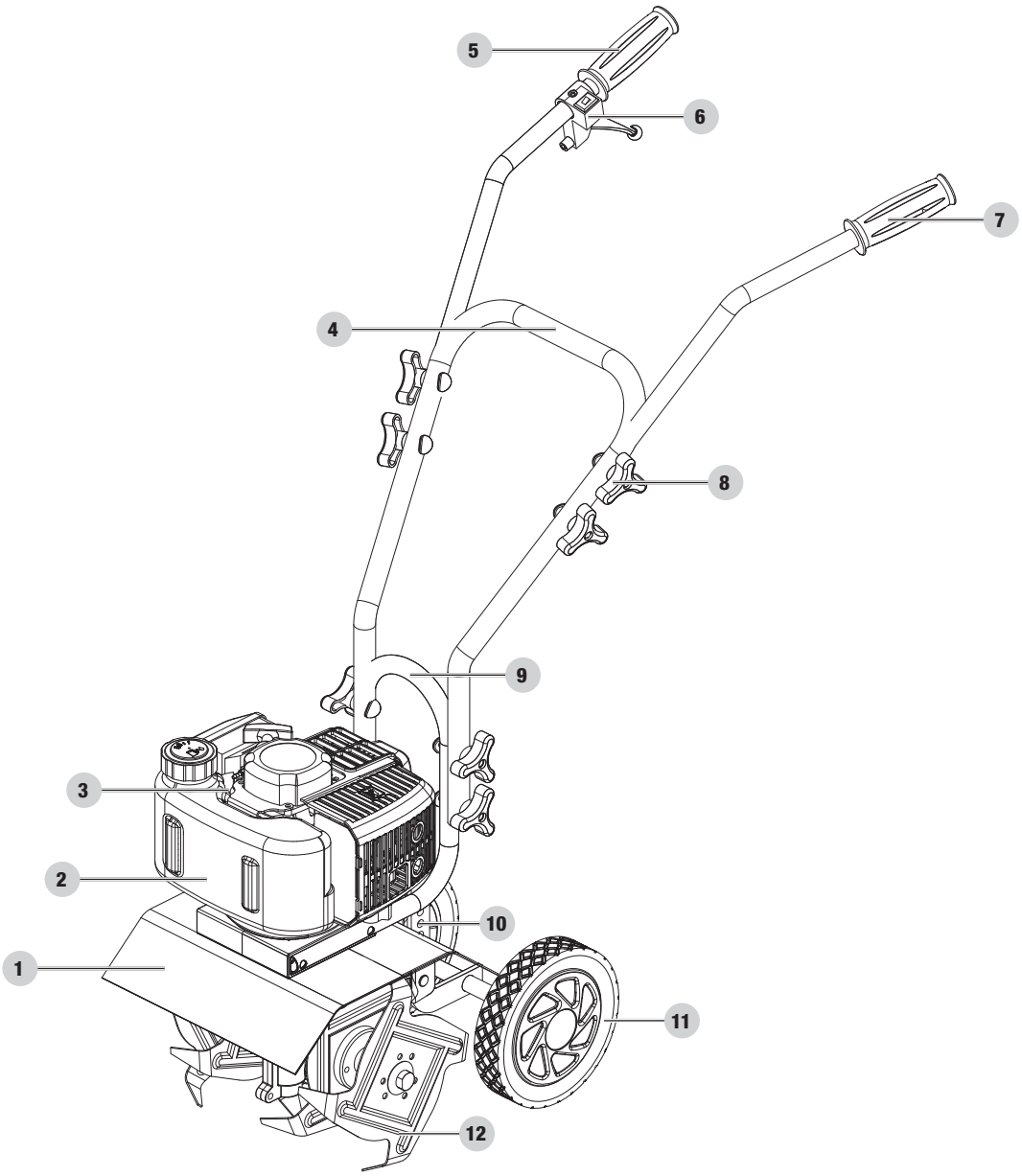

1. Fender Guard
2. Fuel Tank – 0.3 gal. (1.1 L), 50:1 ratio
3. Engine – 43cc
4. Middle Handle
5. Right Handle
6. Throttle
7. Left Handle
8. Knob Nut
9. Lower Handle
10. Axle Assembly
11. Wheel
12. Tine Assembly

Parts Included

Assembly Parts

Part	Part Qty.	Hardware Needed	Hardware Qty.	Tool Needed
Tines	4	R Clip	2	Needle Nose Plier
Wheel Assembly	1	Bolt M6 × 12	2	10mm Wrench or Socket
		Washer Ø6	2	N/A
		Wheels	2	
		Hubcaps	2	
Lower Handle	1	Curved Head Bolt M8 × 45	4	N/A
		Lock Washer Ø8	4	
		Flat Washer Ø8	4	
		Knob-Nut M8	4	
Upper Handle	1	Curved Head Bolt M8 × 45	4	N/A
		Lock Washer Ø8	4	
		Flat Washer Ø8	4	
		Knob-Nut M8	4	
Axle Assembly	1	R Clip	1	Needle Nose Plier
		Clevis Pin 8 × 18	1	

Accessories:

- Spark Plug Socket
- Wrench, 8mm/10mm
- Hex Key, 4mm
- Hex Key, 5mm
- 2 Stroke Oil, 2.6 fl. oz. (76 ml)

ASSEMBLY

Your cultivator requires some assembly. This unit ships from our factory without oil. It must be properly serviced with fuel and oil before operation.

If you have any questions regarding the assembly of your cultivator, call our Technical Support Team at 1-877-338-0999. Please have your serial number and model number available.

Tine Installation or Reinstallation

1. First, slide the inside tines onto each end of the tine shaft. One inside tine is stamped with a “B” and the other is stamped with a “C”.
2. Slide the outside tine “A” and tine “D” onto each end of the shaft next. The tines should be installed in the correct order so that they are positioned right to left A, B, C, D, as viewed from the front of the cultivator. Make sure that the hub collars on both the right and left pairs of tines face each other so that there is adequate spacing between the tine blades.

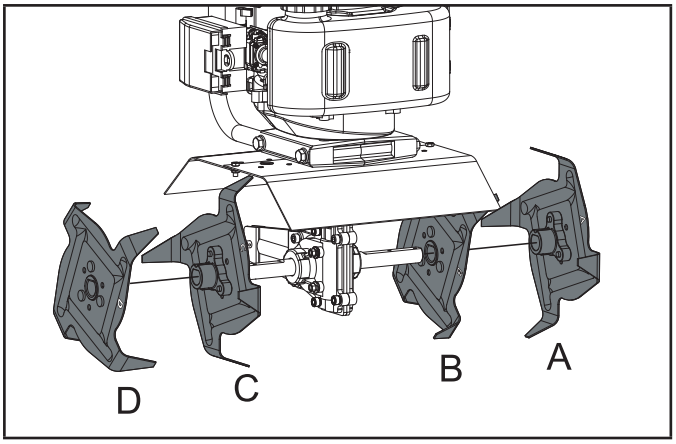

3. Insert the R clip into the holes at each end of the tine shaft to lock the tines into place.

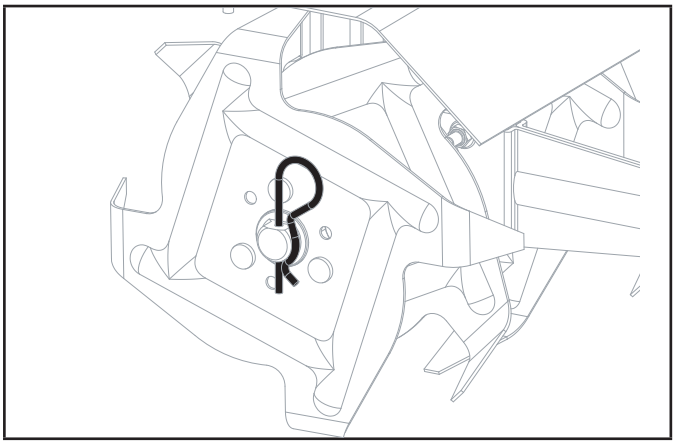

Wheel Assembly

1. Remove the R clip from the clevis pin.

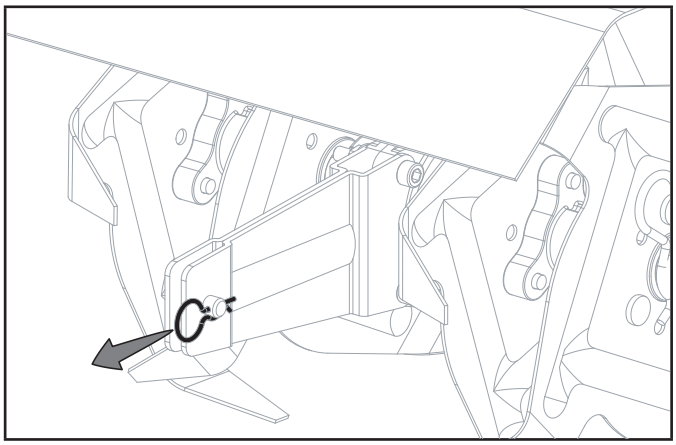

2. Remove the clevis pin from the axle assembly.

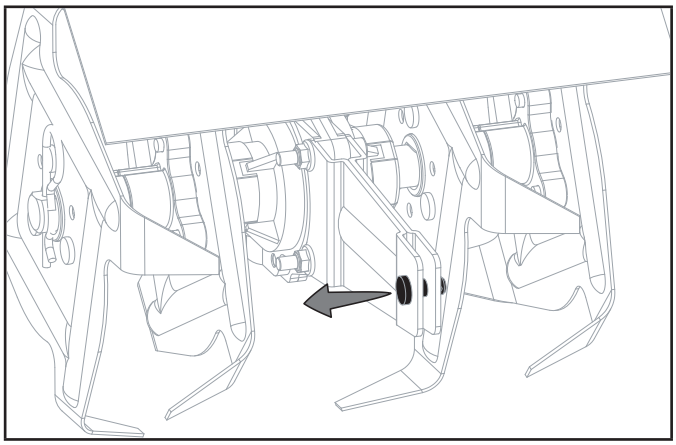

3. Place wheel on each end of the axle. Note installation direction - ring faces outwards.

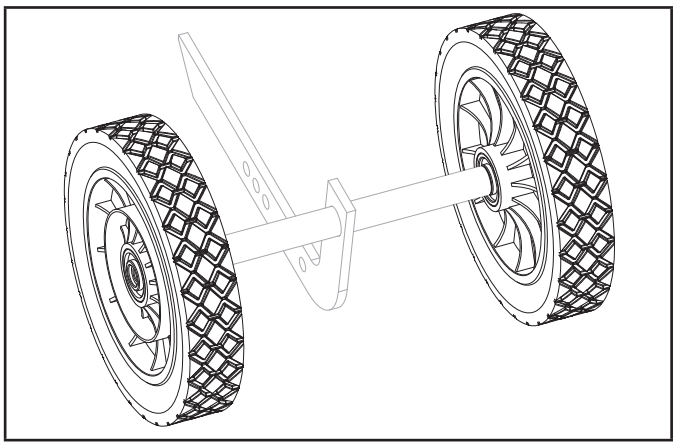

4. Slide a washer onto the axle on each side. Add the nut and hand tighten.

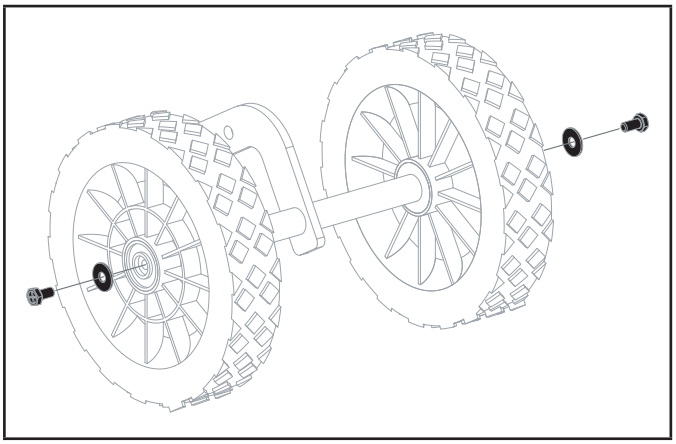

5. Snap hubcap to outside of each wheel.

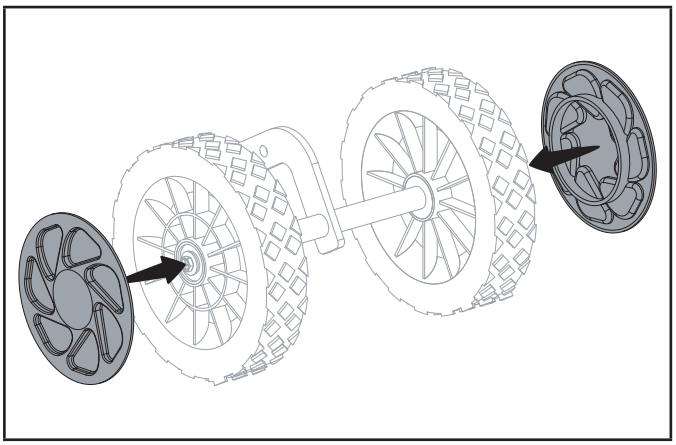

6. Attach wheel assembly to main body, reverse steps 1-2.

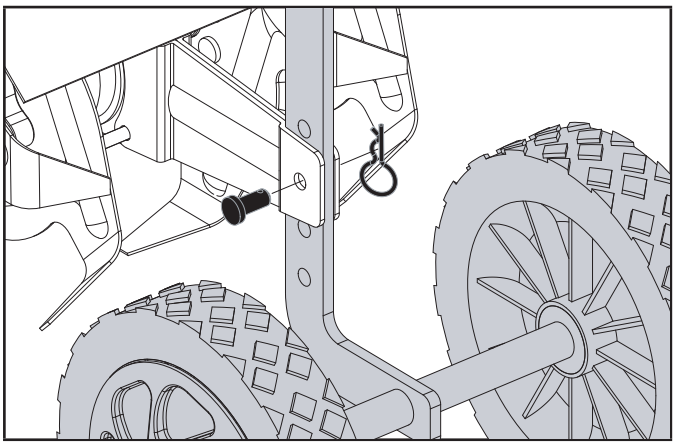

Handle Assembly

1. Attach the middle handle to the lower handle using the knob nuts, lock washers, flat washers and curved head bolts provided. The knob nuts should be on the outside.

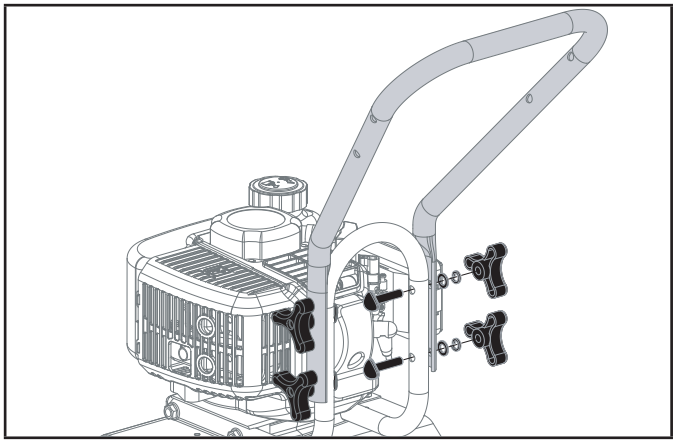

2. Attach the left handle and right handle to the middle handle using the knob nuts, lock washers, flat washers and curved head bolts provided. The knob nuts should be on the outside.

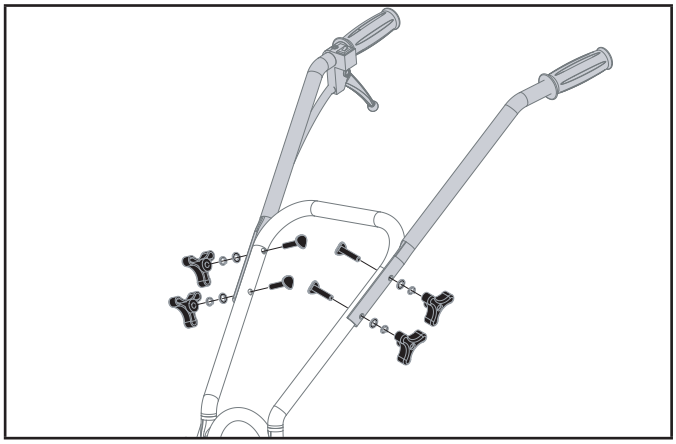

Add Fuel

Your cultivator is powered by a two stroke engine which requires a fuel mixture of gasoline and lubricating oil.

Recommended mixing ratio
Gasoline 50: Oil 1

Use a mixture of 50 parts unleaded regular gasoline and 1 part two-stroke oil (50:1.) Use unleaded gasoline intended for motor vehicle use with an octane rating of 87 or higher. Never use fuel containing more than 10% ethanol.

How to mix fuel

1. Pour 1 gal. (3.8 L) of the gasoline into a safe container. Do not mix the fuel and oil in the engine fuel tank.
2. Add 2.6 oz (76 mL) of two-cycle engine oil to the gasoline. Screw the cap on the fuel container and then swirl the container slowly to blend the oil and gasoline.

Fueling the unit

1. Carefully pour the fuel mix into the cultivator's fuel tank.
2. Only fill the fuel tank to 80% of the full capacity.
3. Fasten the fuel cap securely and wipe up any fuel spillage around the unit.

Important: Always re-mix two-cycle fuel before fueling your cultivator. Never, run your cultivator on gasoline alone. This will ruin your engine and void all warranties.

Always use a clean gasoline container and always use unleaded gasoline with less than 10% ethanol.

Never try to mix the oil and gasoline in the engine fuel tank.

Always mix oil and gasoline in the proper proportions: 2.6 oz (76 mL) of two-cycle engine oil to 1 gallon (3.8 L) of unleaded gasoline.
Pre-mixed fuels like 50:1 TruFuel are also good options to fuel your cultivator.

Ethanol – High levels of ethanol can cause deterioration of rubber and/or plastic parts and disruption of engine lubrication. Never use fuel containing more than 10% ethanol.

⚠ DANGER

Fuel is extremely flammable. Handle it with care. Keep away from ignition sources. DO NOT smoke while fueling your equipment.

NOTICE

DO NOT use old or stale oil/gasoline mixture older than 60 days. Always use the proper oil/gasoline mixture. Not following these instructions will cause your engine to suffer rapid and permanent damage, AND will void the engine warranty.

Gasoline gal. (L)	1 gal. (3.8 L)	2 gal. (7.6 L)	3 gal. (11.4 L)	4 gal. (15.1 L)	5 gal. (18.9 L)
2-Cycle Oil gal. (ml)	2.6 oz. (76 ml)	5.1 oz. (152 ml)	7.7 oz. (228 ml)	10.2 oz. (302 ml)	12.9 oz (378 ml)

OPERATION

Starting and Stopping

NOTICE

To avoid breaking the starter rope, do not pull the whole length or let it slide along the edge of the rope guide. Allow the starter rope to rewind gradually.

To Start a Cold Engine:

1. Cultivator should be on a flat, bare surface for starting.
2. Slowly press the primer bulb 7-10 times or until fuel is visible and flows freely into the clear tank return line.

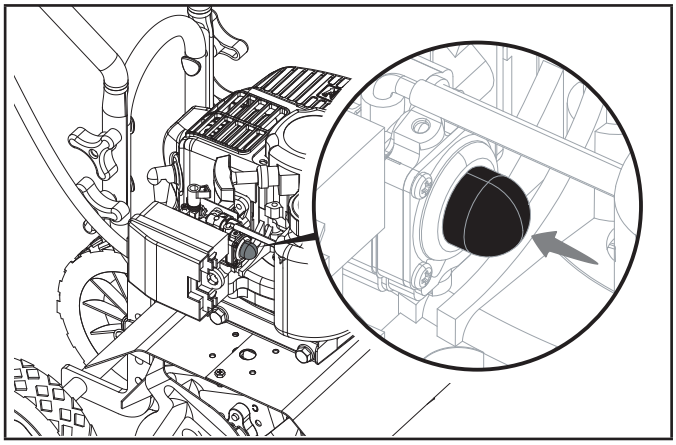

3. Set the choke lever to the CHOKE position

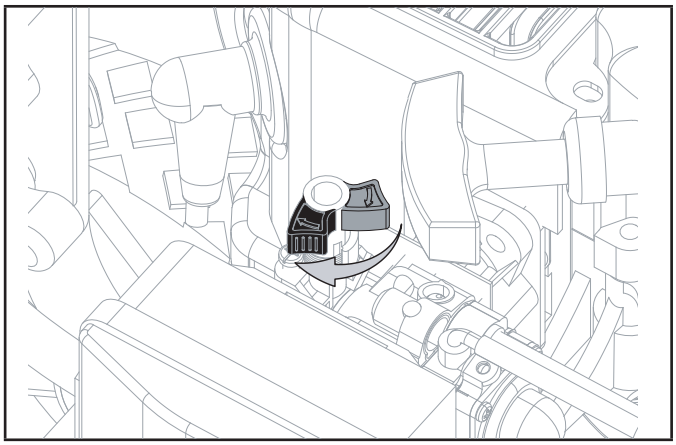

4. Holding the unit firmly, pull the starter handle until the engine starts.

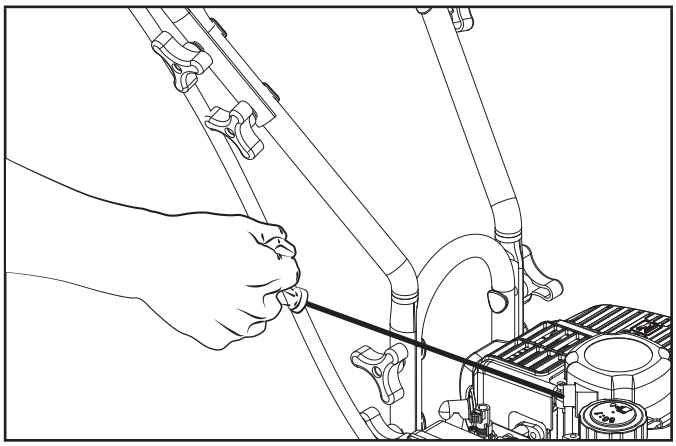

5. Press the throttle trigger when the engine starts. This will automatically move the choke lever to the RUN position. Once the engine is running, release the throttle trigger.

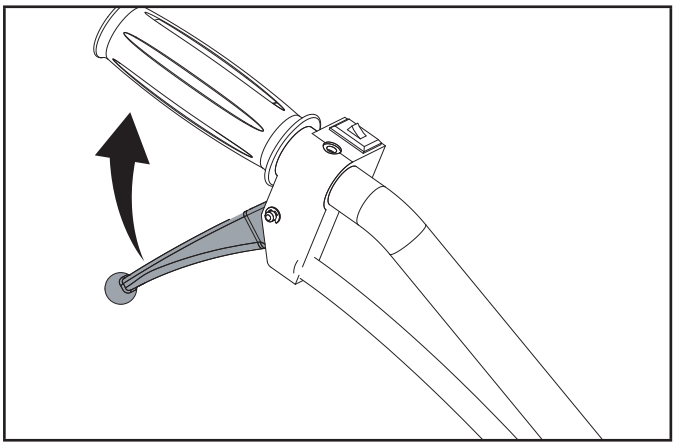

NOTICE

Manually adjusting or turning the choke lever to the CHOKE position during idle will cause the engine to stop.

NOTICE

Allow engine to warm at least 30 seconds depending on ambient temperature. The colder the temperature, the longer the warm up required.

To Start a Warm Engine:

1. Do not adjust the CHOKE lever. It should already be in the RUN position. If not, press the throttle trigger once. This will automatically move the choke lever back to the RUN position.
2. Holding the unit firmly, pull starter handle until engine starts. Use short pulls and do not allow the rope to snap back.

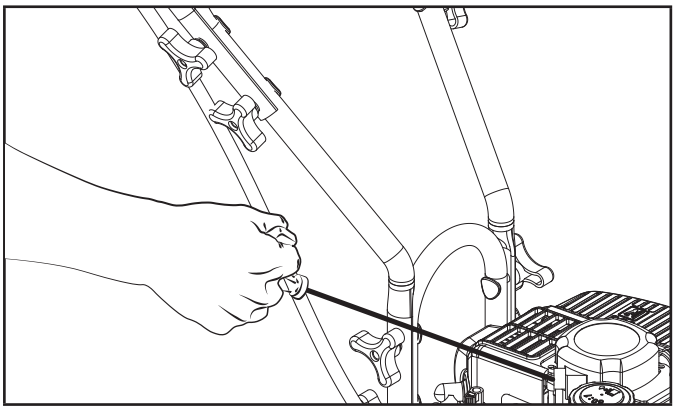

NOTICE

If the engine does not start, return to the “Start a Cold Engine” and repeat the steps that follow.

To Stop the Engine

To stop the engine, depress and hold the throttle switch to the “OFF” position.

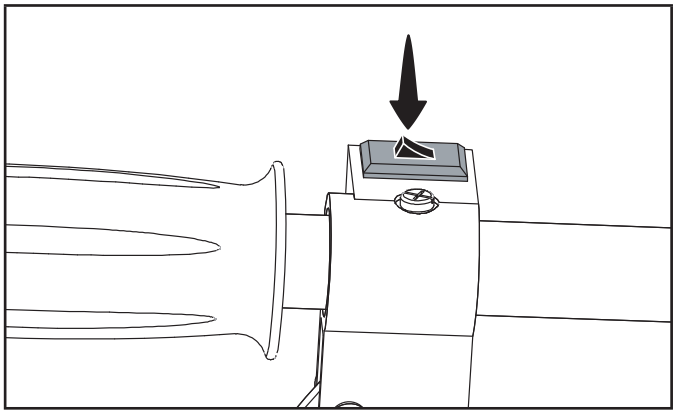

Special Feature (with Idle Set Properly and the Engine Running).

Even when the engine is running, the tines won’t turn unless you press the throttle lever on the handlebars. And, when you release the throttle lever, the tines will stop.

Tips for Extending Engine Life

After you start the engine, let your cultivator warm up for two to three minutes before you use it. Then, before you put your cultivator away, let it idle for a minute to give the engine a chance to cool down.

Gently shake mixed fuel before adding to the cultivator to ensure proper oil content.

Only use fuel less than 60 days old.

WARNING

If the engine does not stop when the engine switch is moved in the “STOP” position, release the throttle. Allow the engine to idle.

Put the cultivator down and slide the choke lever to cold start (closed) position.

Check and return engine switch to the “ON” position before starting the engine again.

Cultivating

Now You're ready to Use Your Cultivator

If you've used a cultivator in the past you know that you walk behind a cultivator as the soil is churned. Your Champion cultivator may surprise you in the fact it works best if you pull it towards you. It tills best when you pull it backward! You see, when you pull your cultivator backward, it provides extra resistance to the tines, so they dig deeper. What's more when you go backward, you create a soil bed that stays light and fluffy ready for plating.

Place your cultivator at the head of the row or area you want to cultivate. Start it up. Then use an easy rocking motion to pull your cultivator backward and then, let it move forward. Repeating this motion while moving the cultivator left and right will maximize the performance of the product and produce optimum planting conditions by helping you cultivate deeper.

Keep repeating these steps until you've tilled an entire row. Start again on the next row. It's much like running a vacuum cleaner!

You Can Even Control Depth

For Deeper Cultivating:

- Move your cultivator slowly back and forth, as you would a vacuum cleaner. Work the same area over and over until you've dug to your desired depth.
- You can use your transport wheel / depth gauge assembly to set specific working depth for your cultivator, see the diagram.

For Shallow Cultivating and Weeding:

- You can quickly skim over an area to weed or scarify the ground for seeding. Simply move the cultivator quickly over your soil surface back and forth, left and right allowing the tines to float on the top of the ground.

For Big Weeds or Tough Roots:

- Let your cultivator rock back and forth over the tough spot, until the tines slice through the weed or root.

⚠ DANGER

The operator of this cultivator is responsible for accidents or hazards occurring to himself, other people or their property.

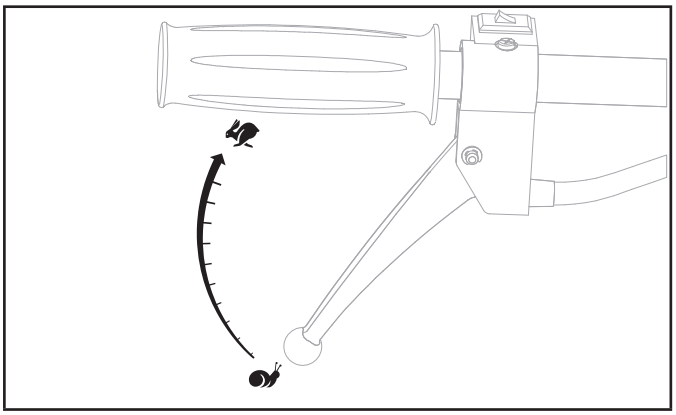

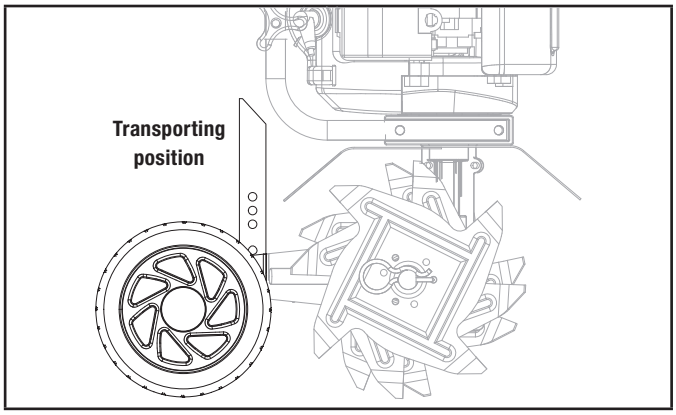

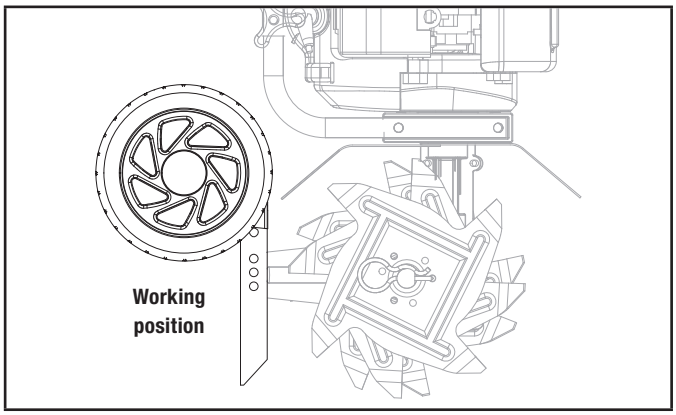

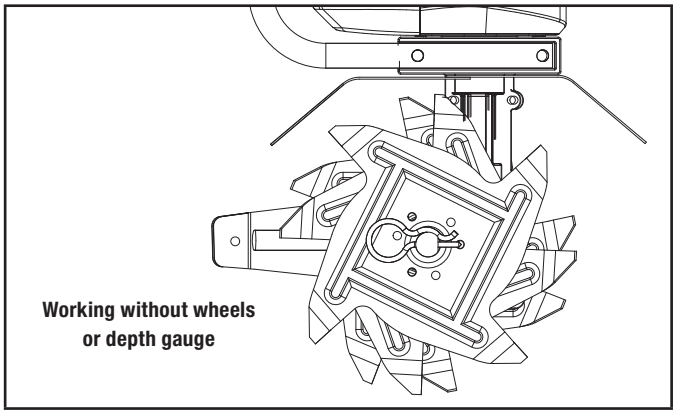

Remember, any cultivator will tangle in tall grass, stringy vines, or overly large weeds. So, if you plan to cultivate in these conditions first use a pruner or brush cutter to chop up the overgrowth. If the tines become tangled, turn the engine off and allow the tines to full come to a stop before trying to clear them.

⚠ WARNING

If your tines get jammed or entangled, shut off the engine at once.

Remove the obstruction while the engine is off.

NEVER try to remove an obstruction while the engine is running. SERIOUS INJURY CAN RESULT.

MAINTENANCE

⚠ WARNING

Never operate a damaged or defective cultivator.

⚠ WARNING

Improper maintenance will void your warranty.

NOTICE

For Emission control devices and systems, read and understand your responsibilities for service as stated in the Emission Control Warranty Statement of this manual.

How to Check, Clean and Change the Air Filter

Check the air filter every 25 hours of use or more frequently if used under dusty conditions. A clogged air filter may increase fuel consumption while cutting down the engine power. Never operate the cultivator without the air filter or with a deformed filter element because unfiltered dust will damage the engine.

Cleaning Air Filter

1. Remove the air cleaner cover by pulling the tab on side and take out the filter element.
2. Use mild detergent and warm water to clean the filter element. After cleaning, air dry the element completely and moisten with a small amount of motor oil.
3. Place the filter element into the air cleaner housing and press the cover against the housing until it clicks.

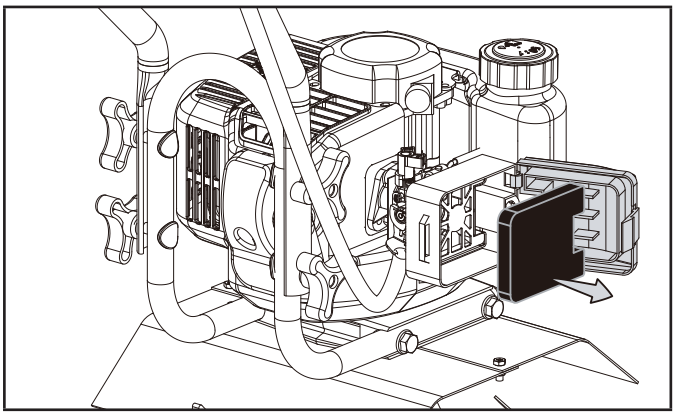

Idle Speed Adjustment

1. Warm up engine before adjusting idle speed.
2. The idle speed adjustment screw controls the throttle opening at idle position.
3. When the engine tends to stop frequently at idling mode, turn the adjusting screw clock wise.
4. If the tines continue to rotate after releasing the trigger, turn the adjusting screw counter-clockwise.

Clear Blockages From the Fuel Line & Filter

1. After you've used your cultivator for a few seasons, check for blockages in the fuel tank and fuel filter. Such blockages can keep your cultivator from starting and running properly.
2. Clear any blockages you see in the tank or fuel line, replace the fuel filter if needed.

NOTICE

The fuel filter is located inside the tank.

Spark Plug

Starting failure and mis-firing are often caused by a fouled spark plug. Clean the spark plug and adjust the plug gap to 0.020-0.028 in. (0.5-0.7 mm) if necessary.

– To install the spark plug first turn the plug until it is finger tight, then tighten it a quarter turn more with a ¾ in. (19 mm) socket wrench.

⚠ CAUTION

DO NOT overtighten the spark plug.

NOTICE

The cultivator uses NHSP L8RTC or NGK BPMR7A spark plug. Use an exact replacement and replace annually.

Muffler

Inspect periodically the muffler for loose fasteners, any damage or corrosion or blockage caused by insect nests. If any sign of exhaust leakage is found, stop using the machine and have it repaired immediately.

⚠ WARNING

Note that failing to do so may result in the engine catching on fire.

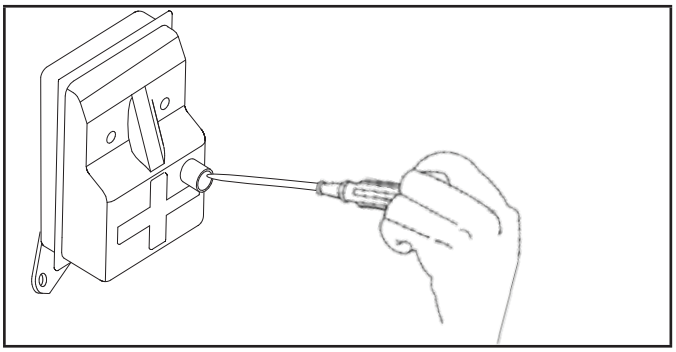

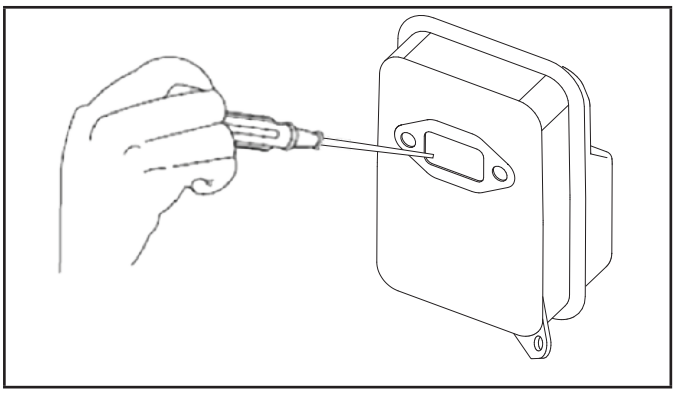

Intake Air Cooling Vent

- Never touch the cylinder, muffler, or spark plugs with your bare hands immediately after stopping the engine. The engine can become very hot when in operation, and doing so could result in severe burns.
- When checking the machine before using it, check the area around the muffler and remove any debris. Failing to do so could cause the muffler to become overheated, and that this in turn could cause the engine to catch on fire. Always make sure that the muffler is clean and free of debris before use.
- Check the intake air cooling vent and the area around the cylinder cooling fins after every 25 hours of use for blockage. Note that it is necessary to remove the engine cover in order to view the upper part of the cylinder.

Procedures to be Performed After Every 100 Hours of Use

- Remove the muffler, insert a screwdriver into the vent, and wipe away any carbon buildup. Wipe away any carbon buildup on the muffler exhaust vent and cylinder exhaust port at the same time.
- Tighten all screws, bolts, and fittings.
- Check to see if any oil or grease has worked its way in between the clutch lining and drum, and if it has, wipe it away using oil-free, lead-free gasoline.

Maintenance Schedule

Follow the service intervals indicated in the schedule below. Service your cultivator more frequently when operating in adverse conditions. Contact our help line at 1-877-338-0999 to locate the nearest Champion Power Equipment authorized service dealer for your cultivator or engine maintenance needs.

BEFORE USE

- ☐ Wipe out fuel leaks, fuel spillage.
- ☐ Inspect and clean fuel tank, air filter and fuel filter.

EVERY 25 HOURS

- ☐ Clean cylinder fins and intake air cooling vent.
- ☐ Clean air filter.

EVERY 50 HOURS

- ☐ Clean and readjust spark plug gap (gap: 0.020-0.028 in. (0.5-0.7 mm) replace if necessary).
- ☐ Clean exhaust port.
- ☐ Clean air filter.

ANNUALLY

- ☐ Replace spark plug.

** Time intervals shown are maximum. Actual use and your experience will determine the frequency of required maintenance.*

STORAGE

Cultivator Storage

Each fall — or before you store your cultivator for any long period — be sure to take these measures:

1. Do not store fuel in your cultivator for long periods of time. Even under ideal conditions, stored fuel containing ethanol can begin to stale in as little as 60 days. Since stale fuel has a high gum content, it can clog the carburetor, this will in turn restrict fuel flow. When ready to store your cultivator, or will not be using it for more than 2 weeks, drain the fuel tank completely.

NOTICE

You can store the unit with 50:1 TruFuel because it is pretreated with stabilizer and has NO ethanol content.

2. Remove fuel from the carburetor and fuel lines by starting the engine and letting the cultivator run out of fuel. This will prevent gum deposits forming inside of the carburetor and possible engine damage.
3. Disconnect spark plug wire and remove the spark plug (use a ¾ in. {19 mm} spark-plug wrench). Pour about a teaspoon of clean, air-cooled, two cycle oil through the spark-plug hole into the combustion chamber. Slowly pull the starter cord two or three times to coat the inside of the cylinder wall.
4. Inspect the spark plug, and, if necessary, clean it. The cultivator uses NHSP L8RTC or NGK BPMR7A spark plug. Use an exact replacement and replace annually.
5. Install the spark plug, but leave the spark plug wire disconnected.
6. Clean the air filter as described on page 14.
7. Clean dirt, grass, and other materials from the entire machine.
8. Wipe the tines with oil or spray them with a rust inhibitor such as WD-40.
9. Oil the throttle cable and all visible moving parts. (Do not remove the engine cover.)
10. Store your cultivator — in an upright position — in a clean, dry place.
11. Do you have fuel left over from last season? Dispose of it properly. Buy fresh oil and gasoline next season.

How to Prepare Your Cultivator for Restarting

In the Spring, when you take your cultivator out of storage, remove the spark plug. Pull the starter cord three or four times to clean oil from the combustion chamber. Wipe oil from the spark plug. Place the spark plug back into the cylinder. Reconnect the spark plug wire back on the spark plug. Then follow the steps to refuel and restart your cultivator.

Re-Starting Problems After Storage

If your cultivator won't restart in the Spring - or if it lacks its usual power - the carburetor may need attention or the spark plug may be at fault. Check to see if the plug is fouled with oily black deposits. Clean or replace it if it is.

Also, check whether the center electrode is rounded at the end, or if the ground electrode is worn. If either is the case, you should replace it with a NHSP L8RTC or NGK BPMR7A spark plug. Use a ¾ in. {19 mm} spark-plug wrench to install it. Adjust the plug gap to 0.020-0.028 in. (0.5-0.7 mm). To install the spark plug first turn the plug until it is finger tight, then tighten it a quarter turn more with a ¾ in. {19 mm} socket wrench.

NOTICE

To avoid possible damage to the threads, do not try to remove the plug from a hot aluminum cylinder head.

SPECIFICATIONS

Cultivator Specifications

Start Type	Recoil
Gasoline/Oil Ratio	50:1
Fuel Capacity	0.3 gal. (1.1 L)
Weight	33.5 lb. (15.2 kg)
Length	38.6 in. (98 cm)
Width	17.7 in. (45 cm)
Height	35.4 in. (90 cm)

Engine Specifications

Model	1E40F-2E
Displacement	43 cc
Type	2-Stroke

Spark Plug

OEM Type	L8RTC
Replacement Type	NGK BPMR7A or equivalent
Gap	0.020-0.028 in. (0.5-0.7 mm)

TROUBLESHOOTING

If you follow the normal starting procedure, you should have no problem starting your cultivator. But, just in case you do have problems, here's what to do:

– Make sure the engine switch is in the "ON" position. If the switch was in the "STOP" position when you pulled the cord, you may have flooded the engine. Even if the engine switch is in the "ON" position, it is possible to flood the engine. The smell of fuel can be a sign the engine is flooded.

1. **Flooded Engine Procedure:**

   1a. First, examine the spark plug. Use a 19 mm spark plug wrench.

   1b. Remove the cap over the spark plug.

IMPORTANT: To avoid possible damage to the threads, do not try to remove the plug from a hot engine.

   1c. Unscrew the spark plug.

   1d. If the end of the spark plug is wet, the engine may be flooded. Make sure the switch is in the "Stop" position, disconnect spark plug wire and remove plug. Use a paper towel or a clean rag to dry the spark plug, then, with the spark plug out of the engine, pull the starter cord several times. Shake the fuel out of the inside of the plug and air dry. Next, replace the spark plug. Use the wrench to tighten it and replace the cap. Next, put the switch in the "Start" position and pull the choke lever into the "Start" position. Pull the starter cord three or four times until the engine coughs or sputters. Open the choke (move the choke lever to the "Run" position) and pull the cord a few times. The engine should start and run.

If the end of the spark plug is dry, check to see if the fuel line is blocked.

– The fuel line runs from the fuel tank to the carburetor. Pull it off at the carburetor end. Fuel should drip slowly from the line. Wipe off any excess or spilled fuel.

– If fuel does not drip from the line, check the line for any bends or pinches. Kinks in the line restrict the flow of fuel to the engine. Just straighten out the line. Reconnect. Then follow the normal starting procedure.

– If fuel drips too freely, the line may be disconnected from the fuel filter. You'll find the fuel filter inside the fuel tank. Just re-attach the line to the filter, and put the filter back in the tank. Then follow the normal starting procedure.

⚠ WARNING

Make sure the engine switch is in the top position. Keep plug wire away from engine to avoid unintentional spark.

IMPORTANT: Never use starting fluids. Starting fluids will cause permanent engine damage. Using them will void the warranty.

Problem	Check	Cause	Solution
Starting Failure	Fuel tank	Incorrect fuel	Drain and fill with correct fuel
	Fuel filter	Fuel filter is clogged	Replace fuel filter
	Flooded engine	Multiple	Let unit sit to air out (15 minutes) or remove spark plug and clean per instruction in manual
	Sparking (no spark)	Spark plug is fouled/ wet, plug gap is incorrect	Clean/ dry, correct gap: 0.020-0.028 in. (0.5-0.7 mm)
Engine starts but does not keep running/ hard re-starting	Fuel Tank	Incorrect fuel	Drain and fill with correct fuel
	Muffler, cylinder (exhaust port)	Carbon is built-up or insect nest in exhaust port	Wipe away and or clean out
	Air cleaner	Clogged with dust	Wash with mild detergent and water, dry thoroughly

For other issues and technical support:

Technical Support Team
Toll Free 1-877-338-0999
support@championpowerequipment.com

WARRANTY*

CHAMPION POWER EQUIPMENT

2 YEAR LIMITED WARRANTY

Warranty Qualifications

To register your product for warranty and FREE lifetime call center technical support please visit:

https://www.championpowerequipment.com/register

To complete registration you will need to include a copy of the purchase receipt as proof of original purchase. Proof of purchase is required for warranty service. Please register within ten (10) days from date of purchase.

Repair/Replacement Warranty

CPE warrants to the original purchaser that the mechanical and electrical components will be free of defects in material and workmanship for a period of two years (parts and labor) from the original date of purchase and 180 days (parts and labor) for commercial and industrial use. Transportation charges on product submitted for repair or replacement under this warranty are the sole responsibility of the purchaser. This warranty only applies to the original purchaser and is not transferable.

Do Not Return The Unit To The Place Of Purchase

Contact CPE's Technical Service and CPE will troubleshoot any issue via phone or e-mail. If the problem is not corrected by this method, CPE will, at its option, authorize evaluation, repair or replacement of the defective part or component at a CPE Service Center. CPE will provide you with a case number for warranty service. Please keep it for future reference. Repairs or replacements without prior authorization, or at an unauthorized repair facility, will not be covered by this warranty.

Warranty Exclusions

This warranty does not cover the following:

Normal Wear

Products with mechanical and electrical components need periodic parts and service to perform well. This warranty does not cover repair when normal use has exhausted the life of a part or the equipment as a whole.

Installation, Use and Maintenance

This warranty will not apply to parts and/or labor if the product is deemed to have been misused, neglected, involved in an accident, abused, loaded beyond the product's limits or modified. Normal maintenance is not covered by this warranty and is not required to be performed at a facility or by a person authorized by CPE.

Other Exclusions

This warranty excludes:

- Cosmetic defects such as paint, decals, etc.
- Wear items such as filter elements, o-rings, etc.
- Failures due to acts of God and other force majeure events beyond the manufacturer's control.
- Problems caused by parts that are not original Champion Power Equipment parts.

Limits of Implied Warranty and Consequential Damage

Champion Power Equipment disclaims any obligation to cover any loss of time, use of this product, freight, or any incidental or consequential claim by anyone from using this product. THIS WARRANTY AND THE ATTACHED U.S. EPA and/or CARB EMISSION CONTROL SYSTEM WARRANTIES (WHEN APPLICABLE) ARE IN LIEU OF ALL OTHER WARRANTIES, EXPRESS OR IMPLIED, INCLUDING WARRANTIES OF MERCHANTABILITY OR FITNESS FOR A PARTICULAR PURPOSE.

A unit provided as an exchange will be subject to the warranty of the original unit. The length of the warranty governing the exchanged unit will remain calculated by reference to the purchase date of the original unit.

This warranty gives you certain legal rights which may change from state to state or province to province. Your state or province may also have other rights you may be entitled to that are not listed within this warranty.

Contact Information

Address

Champion Power Equipment, Inc.
12039 Smith Ave.
Santa Fe Springs, CA 90670 USA
www.championpowerequipment.com

Customer Service

Toll Free: 1-877-338-0999
info@championpowerequipment.com
Fax no.: 1-562-236-9429

Technical Service

Toll Free: 1-877-338-0999
tech@championpowerequipment.com
❗ EMERGENCY 24 HOUR SUPPORT: 1-562-204-1188

*Except as otherwise stipulated in any of the following enclosed Emission Control System Warranties (when applicable) for the Emission Control System: U.S. Environment Protection Agency (EPA) and/or California Air Resources Board (CARB).

CHAMPION POWER EQUIPMENT, INC. (CPE) AND THE UNITED STATES ENVIRONMENTAL PROTECTION AGENCY (U.S. EPA) EMISSION CONTROL SYSTEM WARRANTY

Your Champion Power Equipment (CPE) engine complies with U.S. EPA emissions regulations.

YOUR WARRANTY RIGHTS AND OBLIGATIONS:

The U.S. EPA and CPE are pleased to explain the Federal Emission Control System's Warranty on your 2023 small off-road engine and engine powered equipment. In the United States new equipment that use small off-road engines shall be designed, built and equipped to meet U.S. EPA regulations. CPE shall warrant the emission control system on your small off-road engine and equipment for the period of listed below, provided there has been no abuse, neglect, unapproved modification or improper maintenance of your equipment.

Your emission control system may include parts such as: carburetor, fuel tanks, fuel lines (for liquid fuel and fuel vapors), fuel caps, valves, canisters, filters, clamps, connectors, and other associated components. Where a warrantable condition exits, CPE will repair your small off-road engine at no cost to you including diagnosis, parts and labor.

MANUFACTURER'S WARRANTY COVERAGE:

This emission control system is warranted for two years. If any emission related part on your engine or equipment is defective, the part will be repaired or replaced by CPE.

OWNER'S WARRANTY RESPONSIBILITIES:

As the small off-road engine owner, you are responsible for the performance of the required maintenance listed in your Owner's Manual. CPE recommends that you retain all your receipts covering maintenance on your small off-road engine, but CPE cannot deny warranty solely for the lack of receipts.

As the small off-road engine owner, you should be aware that CPE may deny you warranty coverage if your small off-road engine or a part has failed due to abuse, neglect, or improper maintenance or unapproved modifications.

You are responsible for presenting your small off-road engine to an Authorized CPE distribution center or service center or alternate service outlet as soon as a problem exists. The warranty repairs shall be completed in a reasonable amount of time, not to exceed 30 days.

If you have any questions regarding your warranty coverage, you should contact:

Champion Power Equipment, Inc.
Customer Service
12039 Smith Ave.
Santa Fe Springs, CA 90670
1-877-338-0999
tech@championpowerequipment.com

EMISSION CONTROL SYSTEM WARRANTY

1. **APPLICABILITY:** This section applies to Emissions Control Systems on small off-road engines or equipment that use small off-road engines subject to the emission standards in this Article. The warranty period begins on the date the new engine or equipment is delivered to an ultimate purchaser and shall continue for 24 consecutive months thereafter.

2. **GENERAL EMISSIONS WARRANTY COVERAGE**
   CPE warrants to the ultimate purchaser of the new engine or equipment and to each subsequent owner that the Emissions Control System when installed is:

   2a. Designed, built and equipped to conform to U.S. EPA emissions standards for spark-ignited engines at or below 19 kilowatts;

   2b. Free from defects in materials and workmanship that cause the failure of a warranted part to be identical in all material respects to the part as described in the engine manufacturer's application for certification for a period of two years.

3. **THE WARRANTY ON EXHAUST AND EVAPORATIVE EMISSION-RELATED PARTS WILL BE INTERPRETED AS FOLLOWS:**

   3a. Any warranted part that is not scheduled for replacement as required maintenance in the Operators Manual required by subsection (e) must be warranted for the warranty period defined in subsection (b)(2). If any such part fails during the period of warranty coverage, it must be repaired or replaced by CPE according to subsection (3)(3d) below. Any such part repaired or replaced under the warranty must be warranted for a time not less than the any remaining warranty period.

   3b. Any warranted emissions-related part that is scheduled only for regular inspection in the Operators Manual shall be warranted for the warranty period defined in subsection (b)(2). A statement in such written instructions to the effect of "repair or replace as necessary" shall advise owners of the warranty coverage for emissions related parts. Replacement within the warranty period is covered by the warranty and will not reduce the period of warranty coverage. Any such emission-related part repaired replaced under warranty shall be warranted for a time not less than the remaining warranty period.

   3c. Any warranted emissions-related part that is scheduled for replacement as required maintenance in the Operators Manual shall be warranted for the period of time prior to the first scheduled replacement point for that part. If the part fails prior to the first scheduled replacement, the part shall be repaired or replaced by CPE according to Subsection (3)(3d) below. Any such emissions-related part repaired or replaced under warranty shall be warranted for a time not less than the remainder of the period prior to the first scheduled replacement point for such emissions-related part.

   3d. Repair or replacement of any warranted emissions-related part under the Warranty provisions of this article shall be performed at no charge to the owner at a CPE Authorized Service Outlet.

   3e. The owner of the small off-road engine shall not be charged for diagnostic labor that leads to the determination that a warranted part is in fact defective, provided that such diagnostic work is performed at a CPE Authorized Service Outlet.

   3f. CPE shall pay for covered emissions warranty repairs at non-authorized service outlets under the following circumstances:

      i. The service is required in a population center with a population over 100,000 according to U.S. Census 2000 without a CPE Authorized Service Outlet AND

      ii. The service is required more than 100 miles from a CPE Authorized Service Outlet. The 100-mile limitation does not apply in the following states: Alaska, Arizona, Colorado, Hawaii, Idaho, Montana, Nebraska, Nevada, New Mexico, Oregon, Texas, Utah and Wyoming.

   3g. CPE shall be liable for damages to other original engine components or approved modifications proximately caused by a failure under warranty of an emission-related part covered by the ECS Warranty.

   3h. Throughout the Emissions Control Systems Warranty period, CPE shall maintain a supply of warranted emission-related parts sufficient to meet the expected demand for such emission-related parts.

   3i. Any CPE Authorized, and approved emission-related replacement part may be used in the performance of any ECS Warranty maintenance or repair and will be provided without charge to the owner. Such use shall not reduce CPE's warranty obligation.

   3j. Unapproved add-on or modified parts may not be used to modify or repair a CPE engine. Such use voids this Warranty and shall be grounds for disallowing a warranty claim. CPE shall not be liable hereunder for failures of any warranted parts of a CPE engine caused by the use of such an unapproved add-on or modified part.

EMISSION-RELATED PARTS INCLUDE THE FOLLOWING: (using those portions of the list applicable to the engine)

Systems covered by this warranty	Parts Description
Fuel Metering System	Fuel regulator, Carburetor and internal parts
Air Induction System	Air cleaner, Intake manifold
Ignition System	Spark plug and parts, Magneto ignition system
Exhaust System	Exhaust manifold, catalytic converter
Miscellaneous Parts	Tubing, Fittings, Seals, Gaskets, and Clamps associated with these listed systems.
Evaporative Emissions	Fuel Tank, Fuel Cap, Fuel Lines (for liquid fuel and fuel vapors), Fuel Line Fittings, Clamps, Pressure Relief Valves, Control Valves, Control Solenoids, Electronic Controls, Vacuum Control Diaphragms, Control Cables, Control Linkages, Purge Valves, Gaskets, Liquid/Vapor Separator, Carbon Canister, Canister Mounting Brackets, Carburetor Purge Port Connector

TO OBTAIN WARRANTY SERVICE:

You must take your CPE engine or the product on which it is installed, along with your warranty registration card or other proof of original purchase date, at your expense, to any Champion Power Equipment dealer who is authorized by Champion Power Equipment, Inc. to sell and service that CPE product during normal business hours. Alternate service locations defined in Section (3)(f.) above must be approved by CPE prior to service. Claims for repair or adjustment found to be caused solely by defects in material or workmanship will not be denied because the engine was not properly maintained and used.

If you have any questions regarding your warranty rights and responsibilities, or to obtain warranty service, please write or call Customer Service at Champion Power Equipment, Inc.

Champion Power Equipment, Inc.
12039 Smith Ave.
Santa Fe Springs, CA 90670
1-877-338-0999
Attn.: Customer Service
tech@championpowerequipment.com