ITEM ID	DESCRIPTION
EV24P2	Everdean 24in Vanity w/White VTop

REV	ECO#	DESCRIPTION	REV'D BY DATE	CHK'D BY DATE	APRV'D BY DATE
0		RELEASE	AGS 06/23/20	KN 06/23/20	EC 06/23/20

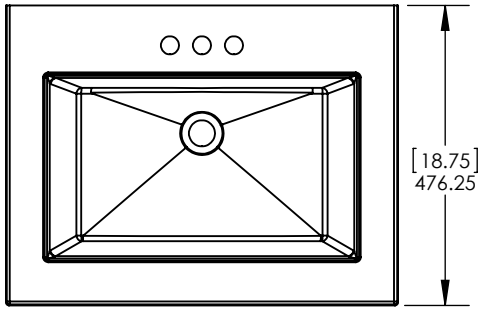

Top View / Vista Superior

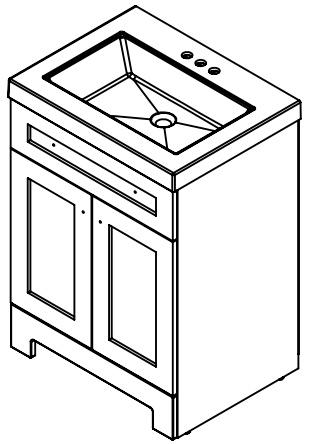

Isometric View / Vista Isometrica

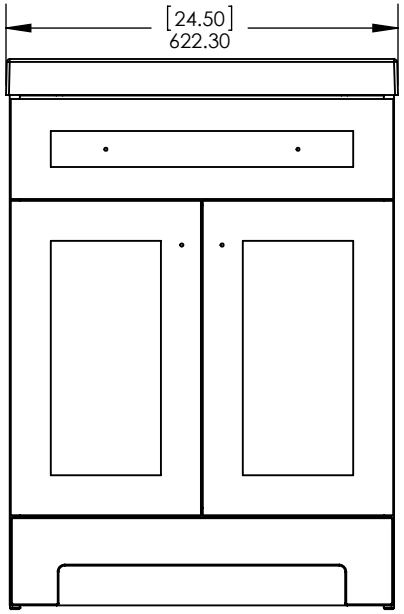

Front view / Vista Frontal

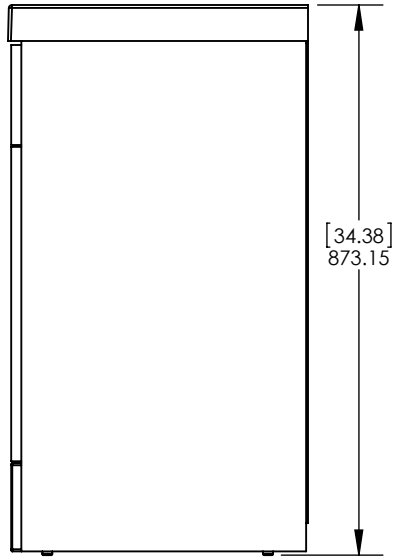

Side View / Vista Lateral

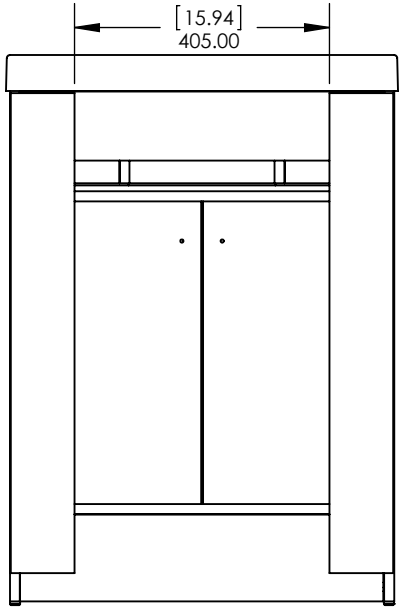

Back View / Vista Trasera

PROPRIETARY AND CONFIDENTIAL
THE INFORMATION CONTAINED IN THIS DRAWING IS THE SOLE PROPERTY OF WOODCRAFTERS HOME PRODUCTS L.L.C. ANY REPRODUCTION IN PART OR AS A WHOLE WITHOUT THE WRITTEN PERMISSION OF WOODCRAFTERS HOME PRODUCTS L.L.C. IS PROHIBITED.

Tolerancia no epsecificada

Lineal	Angular
±0.5mm	±0.5°

Drawn BY/ Dibujado por:	Adolfo Gallegos	06/23/20
Checked By / Revisado Por:	Karina Navarro	06/23/20
Approved By / Revisado Por:	Eduardo Cisneros	06/23/20

Cabinet Name/Nombre de Gabinete: Everdean 24in Vanity w/ White VTop

FG ID:

# of Drawing/ de Dibujo:

PAGE 1 OF 1

REV: 0

ITEM ID	DESCRIPTION
EV24P2	Everdean 24in Vanity w/White VTop

REV	ECO#	DESCRIPTION	REV'D BY DATE	CHK'D BY DATE	APRV'D BY DATE
0		RELEASE	AGS 06/23/20	KN 06/23/20	EC 06/23/20

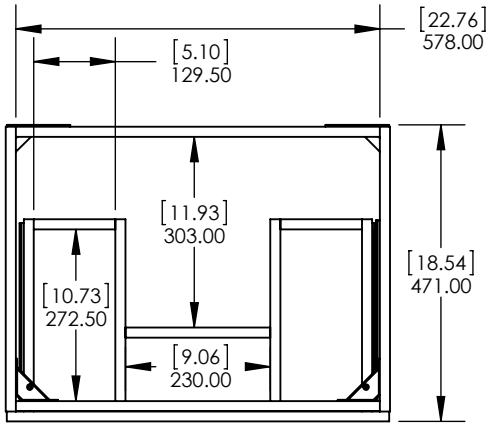

Top View / Vista Superior

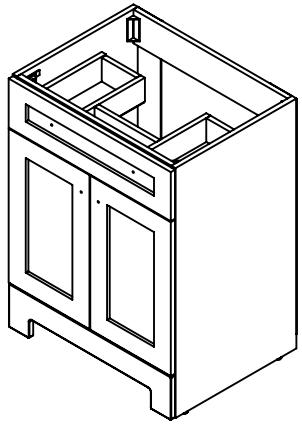

Isometric View / Vista Isometrica

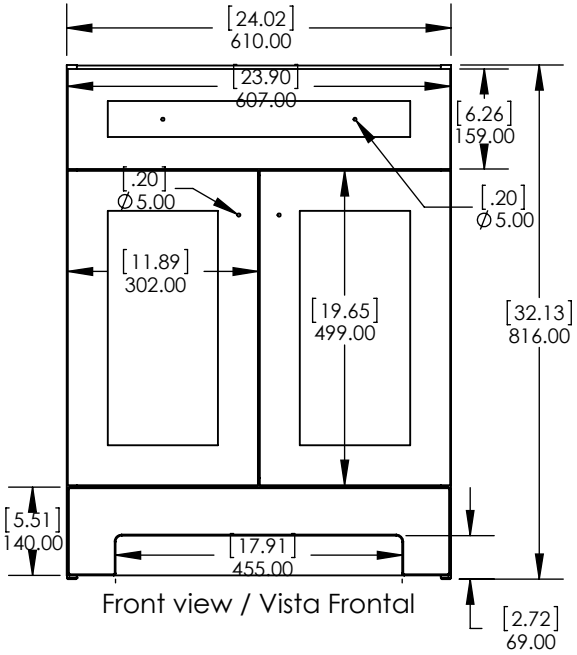

Front view / Vista Frontal

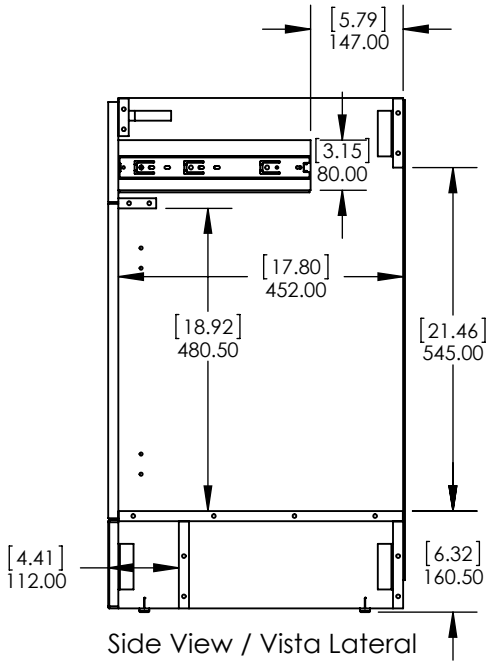

Side View / Vista Lateral

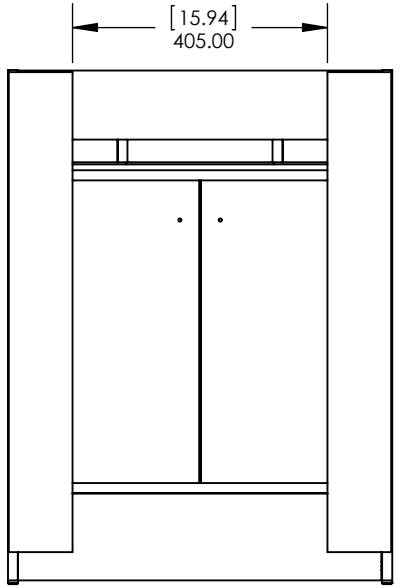

Back View / Vista Trasera

PROPRIETARY AND CONFIDENTIAL	Tolerancia no epsecificada		Drawn BY/ Dibujado por:	Adolfo Gallegos	06/23/20	Cabinet Name/Nombre de Gabinete: Everdean 24in Vanity w/ White VTop	FG ID:	
THE INFORMATION CONTAINED IN THIS DRAWING IS THE SOLE PROPERTY OF WOODCRAFTERS HOME PRODUCTS L.L.C. ANY REPRODUCTION IN PART OR AS A WHOLE WITHOUT THE WRITTEN PERMISSION OF WOODCRAFTERS HOME PRODUCTS L.L.C. IS PROHIBITED.	Lineal ±0.5mm	Angular ±0.5°	Checked By / Revisado Por:	Karina Navarro	06/23/20			
			Approved By / Revisado Por:	Eduardo Cisneros	06/23/20	# of Drawing/ de Dibujo:	PAGE 1 OF 1	REV: 0

ID	Description	Technology	Status
595479	Vtop Oslo 24.5x18.75 White 4in	Solid White	Approved for production

Rev #	Approved by	Change
0	R. Rubio	Released

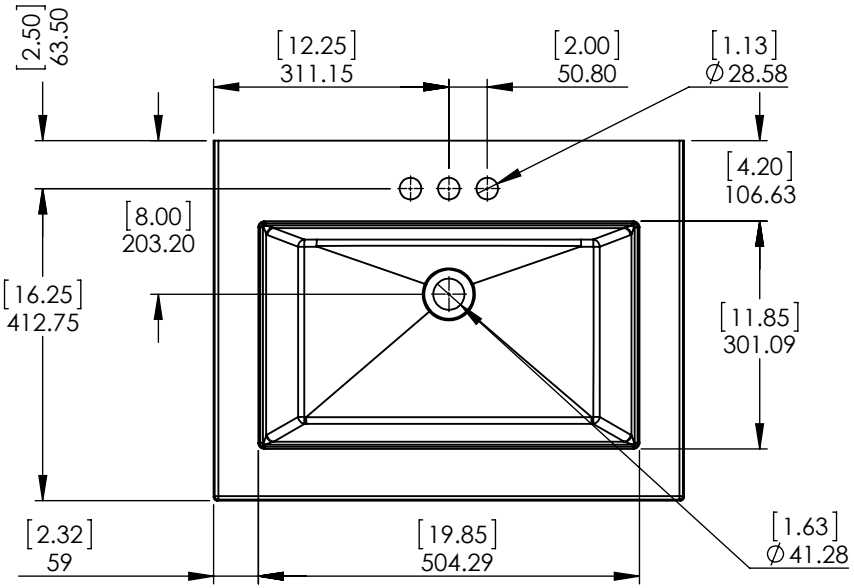

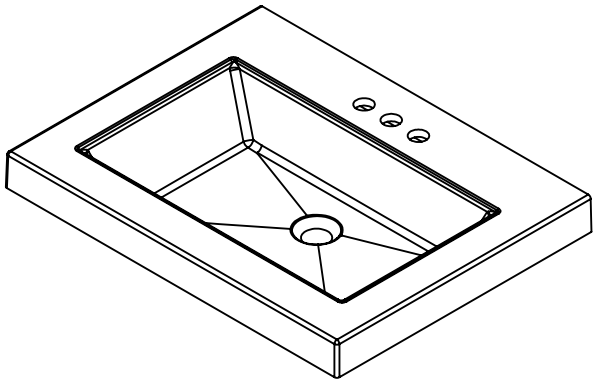

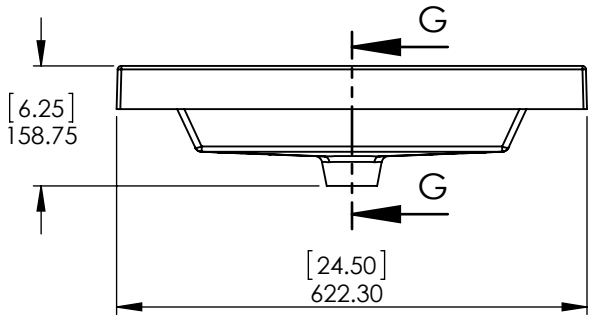

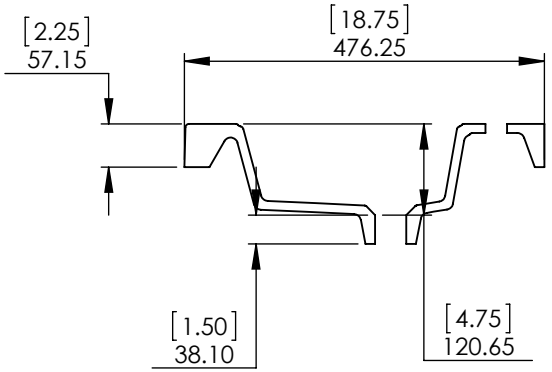

NOTE: MAX. WARPAGE TOLERANCE 1/8"

PROPRIETARY AND CONFIDENTIAL

THE INFORMATION CONTAINED IN THIS DRAWING IS THE SOLE PROPERTY OF WOODCRAFTERS. ANY REPRODUCTION IN PART OR AS A WHOLE WITHOUT THE WRITTEN PERMISSION OF WOODCRAFTERS IS PROHIBITED.

UNLESS OTHERWISE SPECIFIED

DIMENSIONS ARE IN MM. AND [INCHES]

TOLERANCES ARE + 0.125 [3.175] - 0.125 [-3.175]

SCALE:1:10

	NAME	DATE
DRAWN	R. Rubio	11/01/16
CHECKED	R. Rubio	11/01/16
ENG APPR.	R. Rubio	11/01/16
MFG APPR.	C. Leal	11/01/16

SIZE	DWG. NO.	SHEET 1 OF 1
A	*Vtop Oslo 24.5x18.75 4in*	REV: 0