CLAUDIA
67” ACRYLIC DOUBLE ROLL TOP TUB

Cat. No.
ATDR7H69I

BARCLAY



L: 67”
W: 29-⅛”
H: 24”

Water depth: 17-⅛” to top of tub
Water depth: 12-¾” to overflow

The following is recommended for ATDR7H tubs:
•Rim-mounted faucets: part **#4601 or 4201**
•Straight bath supplies: part **#5577**
•Leg tub drain: part **#5599LT or 5599TS**

Gallon Capacity:	59
Shipping Weight:	144 lbs.
Empty Weight:	84 lbs.
Filled Weight:	608 lbs.



Overflow can be drilled. With overflow drilled this tub requires drain 5599PD. **Tubs that have been drilled with overflow are “special order” and are not returnable.**

Features:



►Interior and exterior walls acrylic sheets
►Space between walls partially filled with fiberglass & resin
►7” centers in tub deck
►Cast aluminum imperial feet available in 4 finishes
►Tub is thoroughly inspected before shipment
►IAPMO Certified
►No overflow

Feet Finishes:
BN Brushed Nickel
CP Polished Chrome
PB Polished Brass
ORB Oil Rubbed Bronze

Custom Colors Available (inside of tub is always white enamel):
Painted bathtubs are considered “special order” and are not returnable

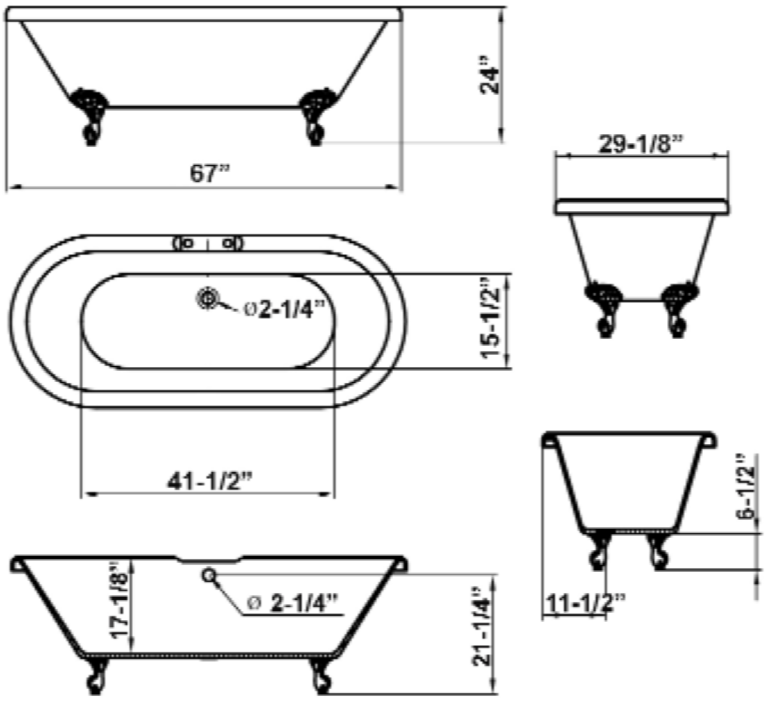

Dimensions of fixture are nominal and specifications subject to change without notice.

P 847•244•1234 | www.barclayproducts.com