

DESCRIPTION

Turbo Tube series is ideal solution for multi-purpose use in residential and commercial ventilation.
Turbo Tube fans combine the features and benefits of both axial and centrifugal fans. Used for both supply and exhaust applications that require powerful air flow.
Turbo Tube fans were engineered to be compact without any loss in performance and are the perfect solution for installation into limited spaces. The Removable Body, including motor, impeller and junction box, is the Ultimate Solution for Easy Installation & cleaning.
Turbo Tube fans are compatible with Ø 4", 5", 6", 8", 10", 12 3/8" ducts.
Two year warranty.

CASING

The fan's casing is made of high quality, UV resistant plastic (UL94 certified plastic). It is equipped with a mounting plate to attach the fan to the wall or ceiling.

MOTOR

Motors are supplied with automatic reset thermal protection and are equipped with ball bearings for longer service life (40,000 hrs). Suitable for air stream temperature up to 140 °F.

SUITABLE FOR:

Bathrooms / Kitchen / Apartments / Pools / Stores / Bars / Restaurants / Manufacturing facilities etc.

DIMENSIONS

Model	Measurements [in.]					lbs
	ØD	ØD1	B	H	L	
TT 100	3 3/4"	5 1/2"	6 9/16"	7 1/2"	9 11/16"	3.7
TT 125	4 13/16"	5 1/2"	6 9/16"	7 1/2"	9 11/16"	3.9
TT 150	5 3/4"	7 11/16"	8 3/4"	9 13/16"	11 5/8"	7
TT 200	7 13/16"	8 1/4"	9 7/16"	10 1/4"	11 5/8"	8.4
TT 250	9 3/4"	10 1/8"	11 5/16"	12 11/16"	15 1/16"	17.3
TT 315	12 3/8"	12 11/16"	14 1/4"	16 1/16"	22 15/16"	25.8

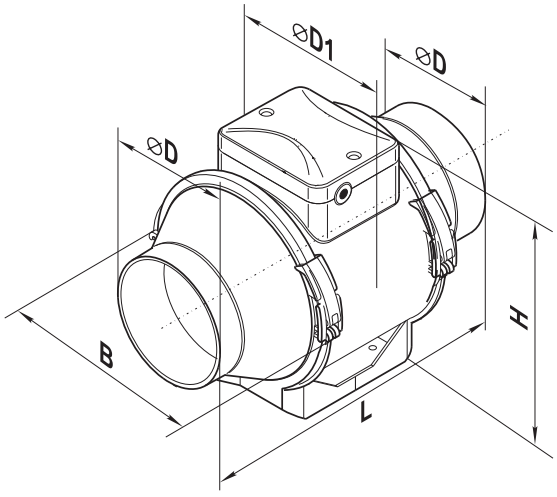

Tel: 888-640-0925
513-348-3853
Fax: 513-268-4597

Sales@ventsus.com
VentsUS.com
400 Murray Rd,
Cincinnati, OH 45217

PERFORMANCE

Model	Duct dia	Speed	Sones	RPM*	Watts*	Amps*	CFM vs. Static Pressure (Ps) in WG										Max Ps. in WG	Volts
							0	0.1	0.2	0.3	0.4	0.5	0.6	0.7	0.8	0.9	1	
TT 100	4"	high	2.5	2584	38	0.45	134	120	100**	55	33	20	4	-	-	-	-	0.63	120 V / 60 Hz
		low	1.1	2527	25	0.29	86	68	50**	28	8	0	-	-	-	-	-	0.52	
TT 125	5"	high	2.5	2472	36	0.46	157	140	120**	83	15	-	-	-	-	-	-	0.46	120 V / 60 Hz
		low	1.4	2191	24	0.3	121	91	60**	1	-	-	-	-	-	-	-	0.32	
TT 150	6"	high	3.5	2072	55	0.46	244	230	210**	174	89**	72	59**	45	34	19	4	1	120 V / 60 Hz
		low	1.5	1896	28	0.23	161	135	70**	48	34**	19	0	-	-	-	-	0.6	
TT 200	8"	high	4.5	2049	104	0.87	440	418	400**	352	347**	319	280**	223	172	115	34	1.1	120 V / 60 Hz
		low	2	1552	65	0.54	319	288	260**	231	179**	141	67**	24	-	-	-	0.8	
TT 250	10"	high	4.5	2525	200	1.68	880	870	866	859	850	842	832	821	795	751	708	2.27	120 V / 60 Hz
		low	2.5	1925	130	1.11	655	641	630	610	588	565	531	497	457	397	330	1.54	
TT 315	12 3/8"	high	4.5	2375	343	2.95	1069	1048	1020**	996	955**	915	889**	863	818	768	713	2.6	120 V / 60 Hz
		low	2.5	1856	224	1.89	858	800	780**	745	688**	626	567**	482	397	347	298	1.7	

* The parameters RPM, Watts, Amps are indicated at 0.2 in WG static pressure.
** HVI rated

MODEL	QUANTITY	COMMENTS	PROJECT
			location:
			architect:
			engineer:
			contractor:
			submitted by:

Tel: 888-640-0925
513-348-3853
Fax: 513-268-4597

Sales@ventsus.com
VentsUS.com
400 Murray Rd,
Cincinnati, OH 45217

2100 HVI CERTIFIED
HARDI Sustaining Member
HVI MEMBER
Intertek