INSTALLATION INSTRUCTION FOR FIXTURE #6732,3,4

WARNING! SHUT OFF THE POWER AT FUSE OR CIUCUIT BREAKER.

MOUNTING THE FIXTURE

1. Shut off the power supply at the fuse box or circuit breaker box. Remove the old fixture from ceiling. Including the universal mounting plate.
2. Carefully unpack your new fixture and lay out all the parts on a clear area. Take care not to lose any small parts necessary for installation.
3. Thread 2 mounting screws (D) through the mounting screw holes from the back of the universal mounting plate (A), then lock it in place by hex nut (C) properly (The Side without “GND” mark).
4. Attach Universal mounting plate (A) to the Outlet box using 2 Outlet Box Screws (B). The side of the universal mounting plate (A) marked “GDN” must face out.
5. Follow the wiring instructions carefully (See Fig.2).
6. Attach the fixture back plate (I) onto the outlet box by protruding 2 mounting screws (D) through the mounting screw holes on the fixture back plate (I), then tighten it with 2 ball nuts (H).
7. Put the glass shade (F) over the socket (G) well and secure with socket ring (E);
8. Install the light bulb in accordance with fixture’s specifications. DO NOT EXCEED THE MAXMUM WATTAGE RATING!

Your installation is now complete. Return power to the junction box and test the fixture.

Wiring (See fig.2)

1. Connect the electrical wires as follows. Connect the black wire from the fixture to the black (HOT) house wire. Connect the white wire from the fixture to the white (Neutral) house wire. Make all the wire nut was secured. You may wrap the connections with electrical tape. If your outlet box has a ground wire (Green or Bare Copper) connect fixture’s ground wire to it. Other wise attach the bare copper fixture wire to the green ground screw on the cross bar.
2. Tuck the wire connections neatly into the wall junction box.

Fig.2

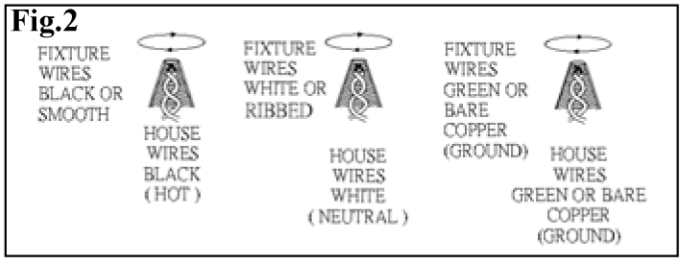

Fig.1

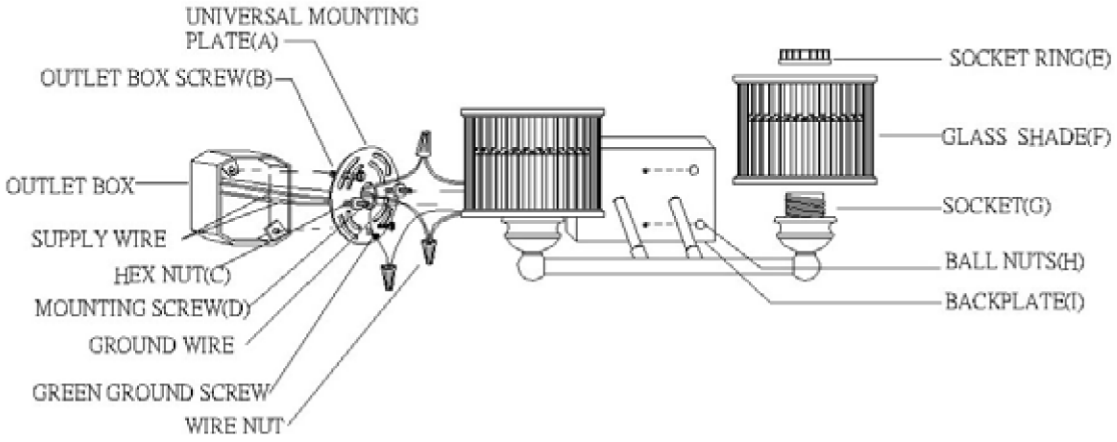

UL® Listed

american lighting association