PART NO. D1712T	SPECIFICATION SHEET	Brass Universal toilet kit with cross handle valve and corrugated 1/2" riser

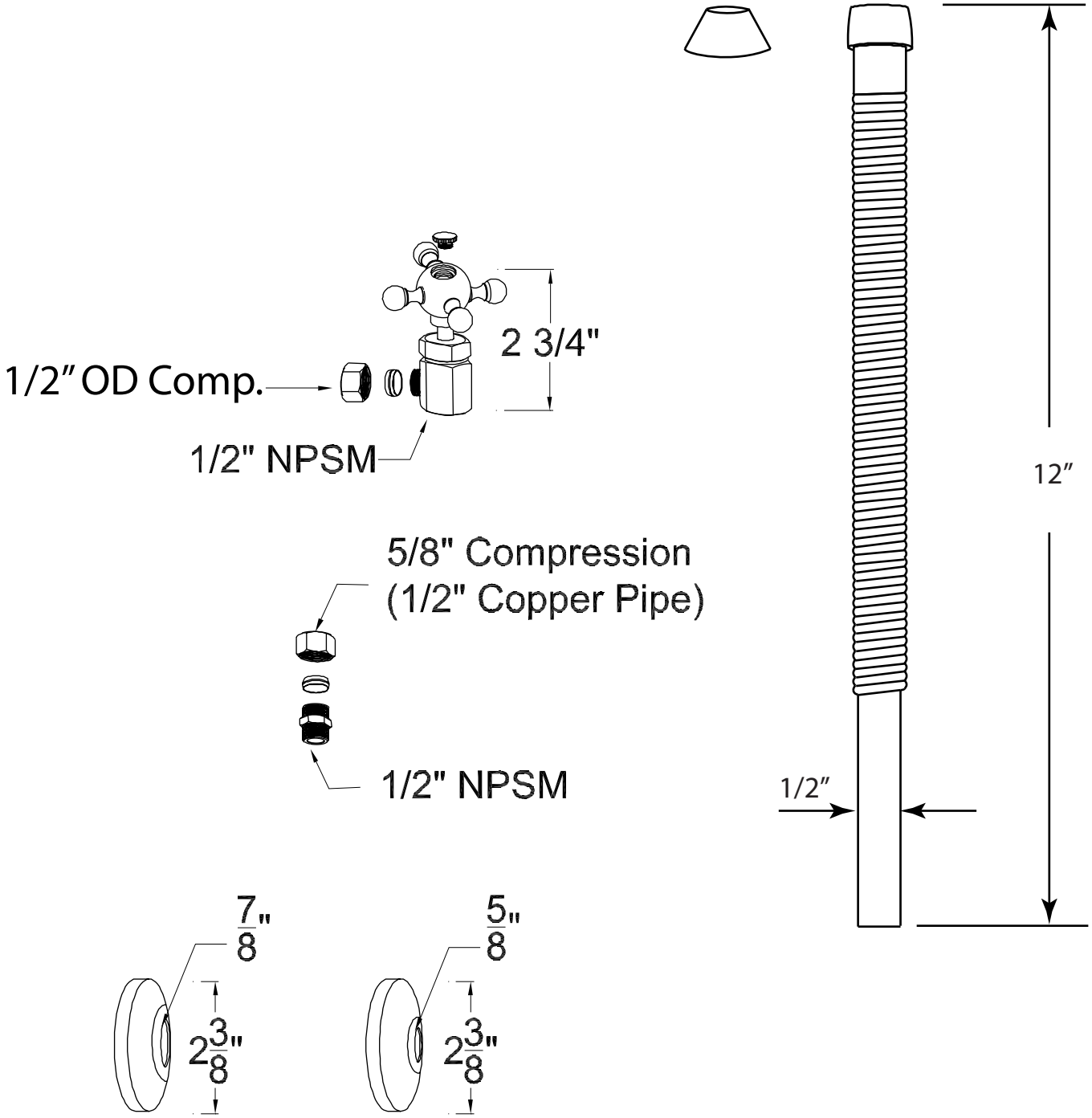

WESTBRASS
Fine Decorative Plumbing Since 1935

info@westbrass.com | www.westbrass.com | (213) 627-8441 | FAX (213) 627-2844