Manual Book

Retractable Ceiling Fans

Model No.: HY-8388-48B
Size: 48 inches



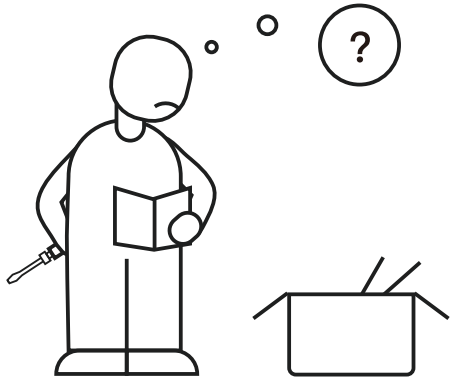

Please contact us with following information:

1. Screen shot of your order page, including product picture, name and order ID number.
2. Problem details with pictures / short video if possbile.

Email: homechandelier@qq.com

Packing List

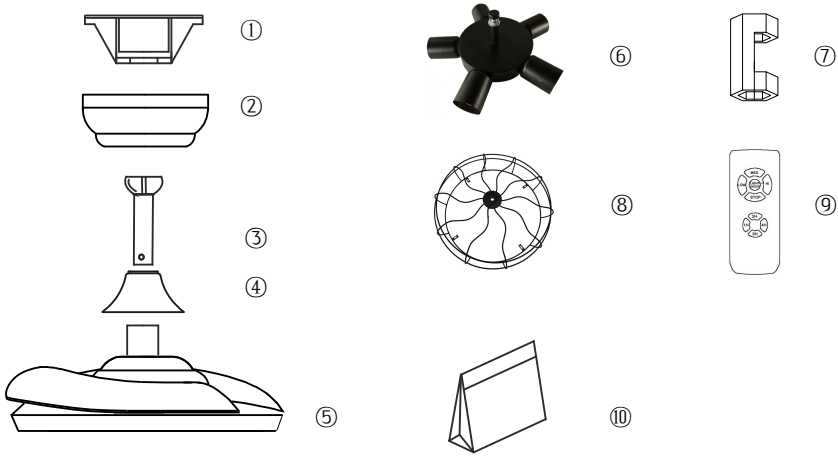

Name	QTY	Name	QTY
(1) Mounting Bracket	1	(6) Bulb Holder	1
(2) Canopy	1	(7) Threaded Tube Hub	1
(3) Downrod	2	(8) Light Frame	1
(4) Adapter Cover	1	(9) Remote Control	1
(5) Fan Motor Assembly	1	(10) Hardware Bag	1

Please open your package and check the accessories according to the packing list.

NOTE:

1. Light Frame⑧ style may vary. Please check page 7 for details.
2. Downrod: short x 1pcs, long x 1pcs
3. Remote control requires AAA 1.5V battery x 2pcs (not included)

Safety Rules

1. Be sure the power to the wires you are working on is disconnected, either the fuse is removed or the circuit breaker is turned off. Turning the power off using the light switch is not sufficient to prevent electrical shock.
2. A qualified licensed electrician is required for the installation.
3. The outlet box and support structure must be securely mounted and capable of reliably /supporting a minimum of 50 pounds. Use only UL (cUL for Canadian Installation) listed mounting boxes marked "FOR FAN SUPPORT".
4. The fan must be mounted with a minimum of 7 feet clearance from the trailing edge of the blades to the floor.
5. Do not operate reversing switch while fan blades are in motion (if applicable). Fan must be turned off and blades stopped before reversing blade direction.
6. Do not place any objects in the path of the blades.
7. To avoid personal injury or damage to the fan and other items, be cautious when working around or cleaning the fan.
8. Do not use water or detergents when cleaning the fan or fan blades. A dry dust cloth or lightly dampened soft cloth will be suitable for the cleaning.
9. After marking electrical connections, spliced conductors should be turned upward and pushed carefully up into outlet box. The wires should be spread apart with the grounded conductor on one side of the outlet box.
10. Electrical diagrams are reference only, different fan light may have different light shade and bulbs.
11. Use only our replacement parts. This equipment has been tested and found to comply with the limits for a class B digital device, pursuant to part 15 of the FCC Rules. These limits are to provide reasonable protection against harmful interference in a residential installation. This equipment generates, uses and can radiate radio frequency energy and if not installed and used in accordance with the instructions may cause harmful interference to radio communications.

Warning:
To reduce the risk of personal injury, use only the two steel screws and washers provided with the outlet box for mounting to the outlet box. Most outlet boxes commonly used for the support of lighting fixtures are not acceptable for fan support and need to be replaced, consult a qualified electrician if in doubt.

To reduce the risk of fire, electric shock or person injury, mount fan to outlet box marked "acceptable for fan support".

To reduce the risk of personal injury, do not bend the blade brackets (also referred to as flanges) during assembly or after installation. Do not insert objects in the path of the blades.

1. Installation Preparation

Tools You Need

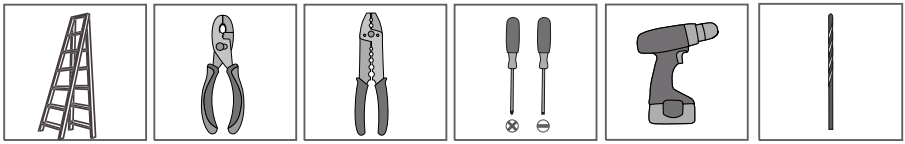

☑ Ladder ☑ Pliers ☑ Wire Strippers ☑ Screwdrivers ☐ Power Drill (optional) ☐ Drill Bit (optional)

If mounting to a support structure, you will also need the optional tools.

What to Expect with Your Installation

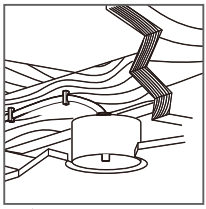

☑ Must be able to secure the fan to building structure or fan-rated outlet box

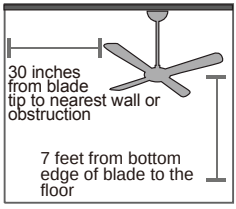

☑ Assess location



☑ Check box to see fan weight

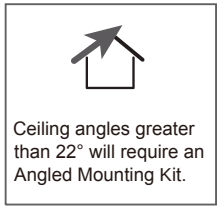

☑ Assess ceiling angle

Mounting Options

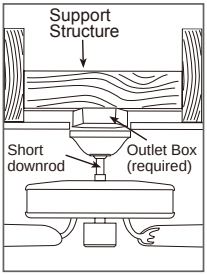

Use short downrod for flat and less than 9 feet ceiling.

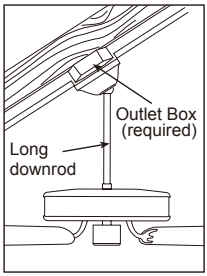

Use long downrod for high or angled ceiling less than 22°.

NOTE: For longer downrod or angled ceiling greater than 22°, please contact us.

2. Installing the Fan

NOTE: This ceiling fan is supplied with two types of hanging downrods:
1. The short downrod for "close-to and flat ceiling" installation (less than 9 feet).
2. The long downrod for high or angled ceiling less than 22°.
3. Please contact us if you need longer downrod or angled ceiling greater than 22°.

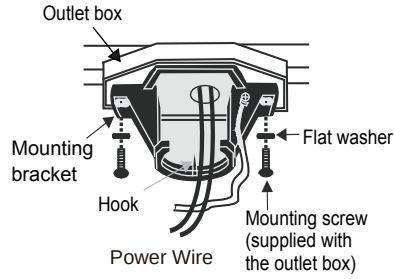

Fig. 5

1. Installing the Bracket
Step 1. Pass the power wires through the center hole in the mounting bracket as shown in Fig. 5.
Step 2. Secure the mounting bracket to the ceiling outlet box with the screws and washers provided with your outlet box.

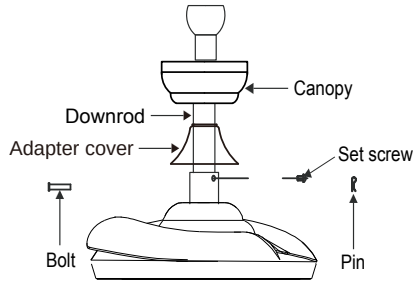

Fig. 6

2. Assembling the Fan
Step 1. Assemble the canopy and adapter cover as Fig. 6.
Step 2. Remove the the bolt, pin and set screws from the top of the fan motor assembly.
Step 3. Route wires from the top of the fan motor through downrod/ ball.
Step 4. Align the holes at the bottom of the downrod with the holes in the collar on top of the motor housing (Fig. 6). Carefully insert the bolt through the holes in the collar and downrod. Be careful not to jam the bolt against the wires inside the downrod. Insert the pin to the end of the bolt (Fig. 6).
Step 5. Fix the downrod with set screws provided.

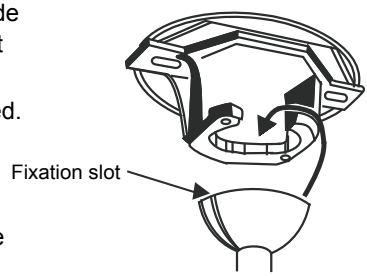

Fig. 7

3. Hanging the Fan
Place the downrod ball into the bracket socket (Fig. 7). Be sure the fixation slot is locked by the bracket.

Email: homechandelier@qq.com

3. Wiring

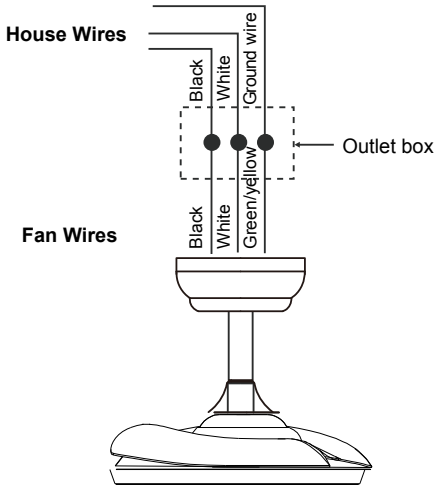

Fig. 8

NOTE: THIS FAN ONLY NEEDS ONE SET OF INPUT WIRES (black, white and ground wire). Both of the fan and lights will be controlled by the remote controller. The wall switch is not able to control the fixture full functionally.

THIS FAN CAN ONLY BE CONNECTED ONTO ON/OFF SWITCH IF YOU HAVE ONE, NOT SUITABLE FOR DIMMAER SWITCH.

Step 1. Connect the fan live wire (black) to your house live wire (black).

Step 2. Connect the fan neutral wire (white) to your house neutral wire (white).

Step 3. Connect the fan ground wire (from downrod, green & yellow stripe / green / bare copper) to your house ground wire (optional).

Step 4. After connecting the wires, spread them apart so that the live wires are on one side of the outlet box and the neutral wires are on the other side.

4. Attaching the Canopy

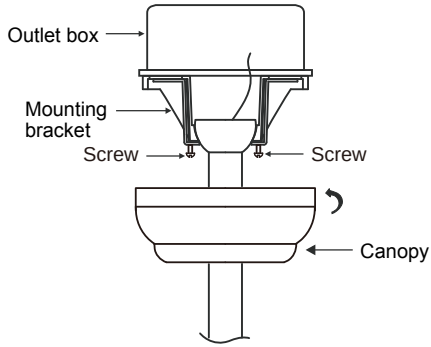

Fig. 9

Step 1. Insert the wires and wire connectors into the outlet box.

Step 2. Slide the canopy upto the ceiling and attach it to the mounting bracket with the screws provided. Tighten all screws securely.

5. Installing Bulb and Light Shade

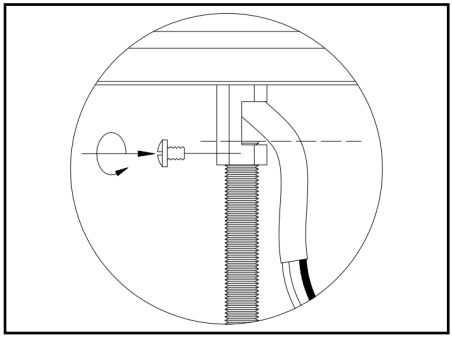



Step 1. Screw the bulb holder hub onto the center of fan base. Pass the wires through the side hole.

Step 2. Take off the threaded tube from the bulb holder, screw it into the hub and fix it with a screw. Connect the wires from the bulb holder to the ones from the fan.

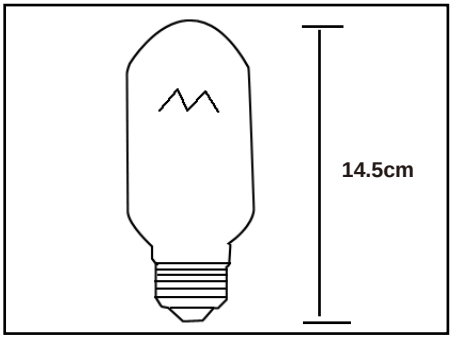



Step 3. Fix the bulb holder onto the threaded tube with cap nut on it. Install bulbs (E26/E27 Max. 60W each). **NOTE: For 48" fan, bulb length should be no more than 5.7 inch/ 14.5cm.**

Step 4. Take off screws from the base, attach the frame onto the base with screws taken off.

NOTE: This fan light is not dimmable, it can not be dimmed even with dimmable bulbs.

Email: homechandelier@qq.com

Remote Control Instructions

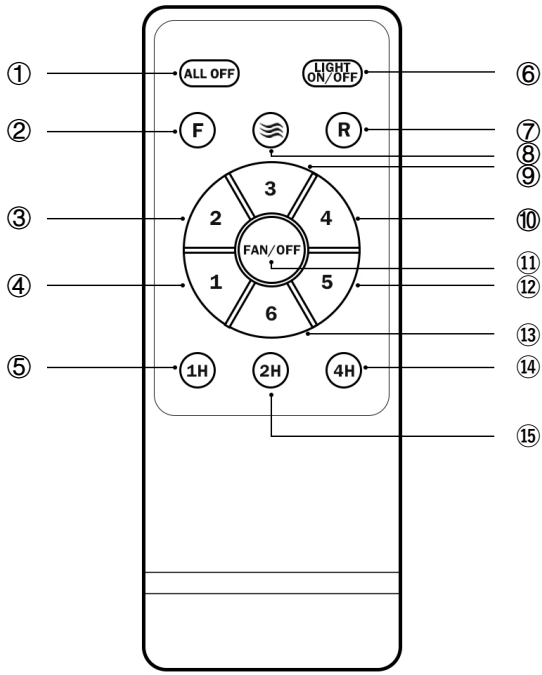

NOTE:
Please insert 2 batteries before using.
AAA 1.5V battery x 2pcs (not included)

①: Turn off the fan and lights.
②⑦: "F" refers forward fan direction."R" refers reverse the fan.
③④⑨⑩⑫⑬: 1/2/3/4/5/6 for fan speeds.
⑤⑭⑮: 1H/2H/4H for timing the fan.
⑥: Turn on/off the lights.
⑧: Natural wind of the fan, fan speed will change automatically when use this function.
⑪: Turn off the fan.

Trouble Shooting

1. Fan doesn't work
• Press a fan speed button (1-3).
• Check the remote control battery (not included in this package).
• Check the circuit breaker to ensure the power is turned on.
• Make sure the blades spin freely.
• Turn off power from the circuit breaker, then loosen the canopy and check all the connections according to the wiring diagram.

2. Bulbs do not light up
• Check your power and switch to make sure it's power on.
• Check the bulb to make sure it's installed correctly
• Change a new bulb.
• Check the wires to make sure they are connected correctly.

4. Noisy operation
• Tighten the light fitting
• Re-tighten all screws on bracket, downrod and fan blades (do not over tighten)
• Check to see if any of the blades are cracked. If so, replace all of the blades.

5. Remote does not work
• Make sure the battery is installed correctly.
• Install 2 new batteries.

6. Excessive wobbling
• Tighten all of the blade screws.
• Turn off power, support the fan carefully, and check that the hanger ball is properly seated.
• Use the provided balancing kit and instructions to balance the fan:
Step 1. Attach the magnet to place①, ②, ③ or ④, turn on the fan and test where it needs the balance kit.
Step 2. Replace the magnet with the balance paster.

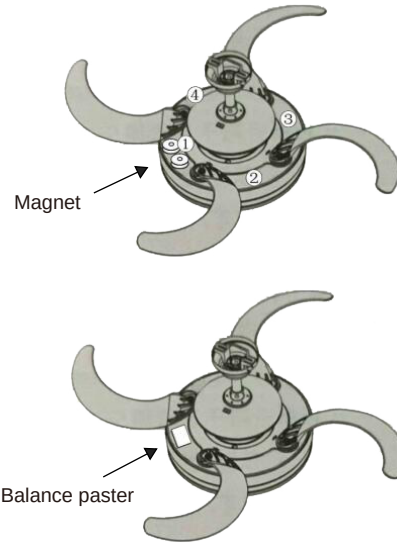

Email: homechandelier@qq.com

Clean And Care

To clean, wipe fixture with soft cloth. Spray from chemical cleaners can discolor the finish of fixture. Do not use scouring pads, powders, steel wool or abrasive paper to clean this fixture.

Ordering Parts

Keep this manual for future reference, and in case replacement parts are needed. Available parts can be ordered from place of purchase. Use exact wording from diagrams when ordering parts.

Hazardous substance

Part name		Mercury (Hg)	Cadmium (Cd)	Hexavalent Chromium (CrVi)	Polybrominated biphenyls (CrVi)	Polybrominated diphenyl ethers (PBDE)
Cord set	×	O	O	O	O	O
Lamp holder	×	O	O	O	O	O

This table is prepared according to provisions of SJ/T 11364.

O: Indicates that said hazardous substance contained in all of the homog eneous materials for this part is below the limit requirement of GB/T 26572.

×: Indicates that said hazardous substance contained in at least one of the h omogeneous materials for this part above the limit requirement of GB/T 26572.

"We followed the light to a brighter and warmer place."