Save This Manual for Future Reference

YARDMAX®

Gas Log Splitter

Operator's Manual

MODEL NUMBER

- ☐ **YS3265**
- ☐ **YS3665**
- ☐ **YS4065**

SERIAL NUMBER

PURCHASE DATE

Both model number and serial number may be found on the main label. You should record both of them in a safe place for future use.

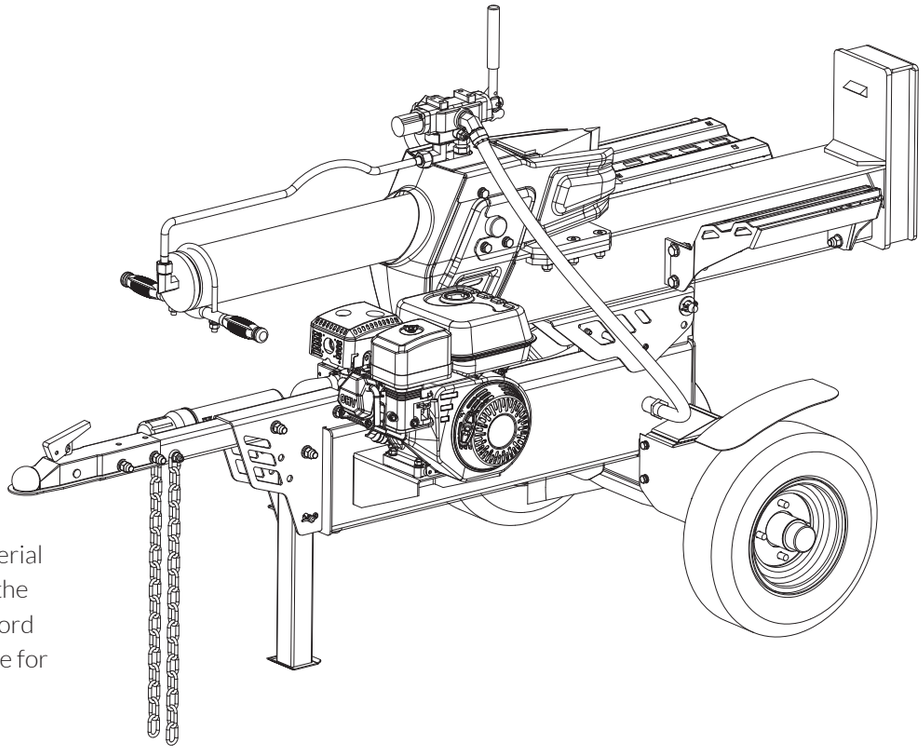

FOR YOUR SAFETY

READ AND UNDERSTAND THE ENTIRE MANUAL BEFORE OPERATING MACHINE

Tame the Great Outdoors®

Your new YARDMAX® gas log splitter offers quality construction, and is easy and safe to operate. With proper use and care, it is designed to give you many years of dependable service.

Prepare to experience the durability to take on any job — with the ease, portability, and convenience of clean, gas splitting!

Discover the YARDMAX Advantage

At YARDMAX, we understand that land ownership definitely has its privileges, but it also comes with a great deal of responsibility. When duty calls and you need to respond, will you have what it takes to tame the great outdoors?

When looking for outdoor power equipment (OPE) to get the job done right, at the right price, YARDMAX delivers the perfect combination of performance and practicality. YARDMAX has a solution that's right for you.

MAX Performance, MAX Value, MAX Support — that's YARDMAX

- ✓ Backed by decades of proven manufacturing expertise
- ✓ Enhanced design features come standard
- ✓ Engineered for the best user experience
- ✓ Quality metal parts are used instead of plastic
- ✓ A robust warranty supports all products
- ✓ Budget-friendly prices make it practical

YARDMAX®

Up for the job? YARDMAX is.

TABLE OF CONTENTS

Introduction	1
Specifications	3
Symbols	5
Safety	6
Unpacking the Container	9
Contents Supplied	10
Assembly	12
Know Your Machine	19
Operation	21
Transporting	24
Maintenance	25
Storage	26
Troubleshooting	27
Parts Diagram	28

Carefully read through this entire operator's manual before using your new unit. Pay attention to all cautions and warnings.

This unit is a gasoline engine driven hydraulic log splitter. It is designed to split wood logs for use as firewood for a stove or fireplace. This log splitter will only split logs lengthwise with the grain.

ENGINE MANUAL

The **Engine Manufacturer** is responsible for all engine-related issues with regards to performance, power rating, specifications, warranty and service. Please refer to the **Engine Manufacturer's** owner/operator's manual, packed separately with your unit, for more information.

EMISSION CONTROL SYSTEM

This equipment or its engine may include exhaust and evaporative emission control system components required to meet U.S. Environmental Protection Agency (EPA) and/or California Air Resources Board (CARB) regulations. Tampering with emission controls and components by unauthorized personnel may result in severe fines or penalties. Emission controls and components can only be adjusted by an authorized engine manufacturer's service center.

CALIFORNIA PROPOSITION 65 WARNING

Engine exhaust, some of its constituents and certain product components contain or emit chemicals known to the state of California to cause cancer and birth defects or other reproductive harm. For more information, go to www.P65Warnings.ca.gov.

ENVIRONMENTAL

Recycle unwanted materials instead of disposing of them as waste. All tools, hoses, and packaging should be resorted, taken to the local recycling center and disposed of in an environmentally safe way.

MODEL AND SERIAL NUMBERS

Record the model and serial number as well as date and place of purchase for future reference. Have this information available when ordering parts or optional accessories and when making technical or warranty inquiries.

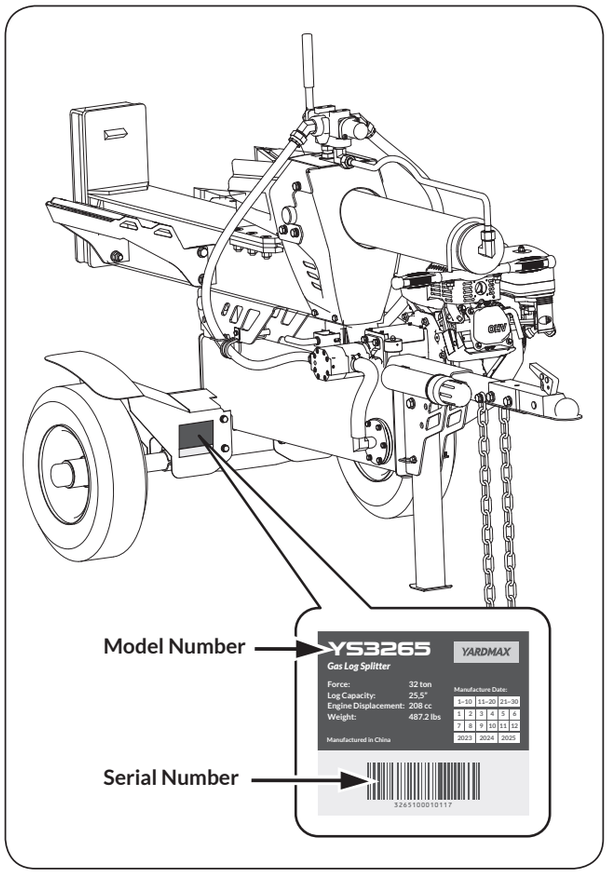

DISCLAIMER

YARDMAX reserves the right to discontinue, change, and improve its products at any time without notice or obligation to the purchaser. The descriptions and specifications contained in this manual were in effect at printing. Equipment described within this manual may be optional. Some illustrations may not be applicable to your unit.

SUPPORT

Have questions about your YARDMAX equipment? Call us at 847-327-0566 or 844-YARDMAX, email us at support@yardmax.com, or contact us via your favorite social media site.

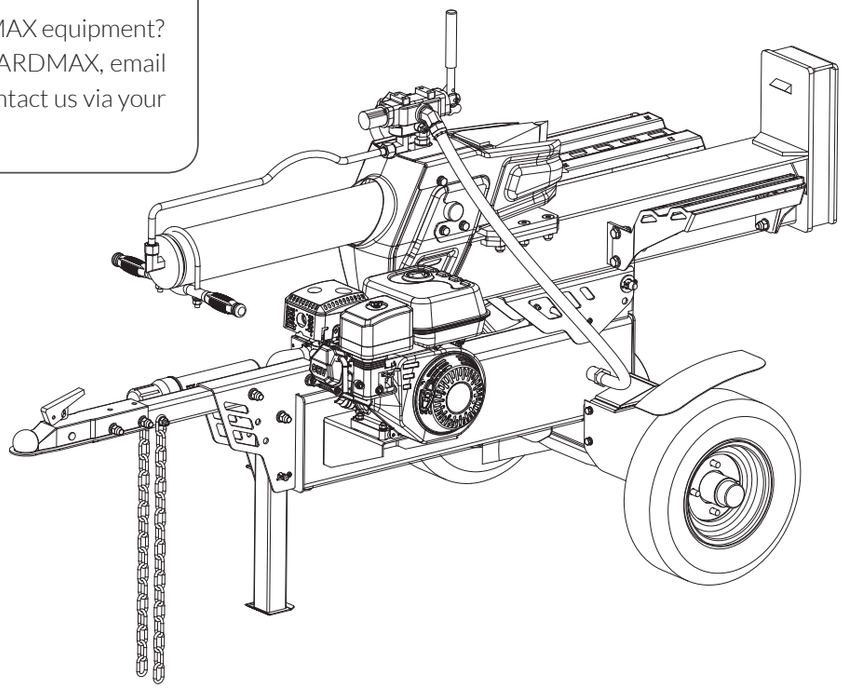

SPECIFICATIONS

Model #	YS3265	YS3665	YS4065
Splitting Force*	32 Ton	36 Ton	40 Ton
Log Capacity	25.5"	25.5"	26"
Engine	Briggs & Stratton		Briggs & Stratton
Displacement	208 cc		306 cc
Gross Torque @ 2600rpm	9.5 ft- lb		14.5 ft- lb
Fuel Capacity	0.80 Gallon		1.40 Gallon
Engine Oil Capacity	0.16 Gallon		0.29 Gallon
Starting System	Recoil		
Control Valve	Auto Return with Adjustable Detent		

Model #	YS3265	YS3665	YS4065
Pump Size	14 GPM	14 GPM	18 GPM
Hydraulic Cylinder Bore	4.5"	4.75"	5"
Hydraulic Cylinder Stroke	24"	24"	24"
Hydraulic Rod Diameter	1.75"	2"	2"
Cylinder Cycle Time*	15.4 seconds	16.2 seconds	15.2 seconds
Hydraulic Capacity	5.4 Gallon	5.9 Gallon	6.2 Gallon
Hydraulic Oil Included	Pre-filled with premium hydraulic fluid		
Replacement Filters	Built-in, Sealed, Return Filter, Suction Screen		
Hoses	High pressure w/wire braid; Coil-wrapped		
Beam	Heavy duty U-shape formed construction		
Wedge Size	7.50"		
Wedge Style	2-way		
Rear Wheels	4.80-8, DOT Approved 16" O.D. Road Tires		
Hitch Coupler	2" ball with Safety Chains		
Safety Chains	Standard		
Max Towing Speed	45 mph		
Horizontal/Vertical Splitting	Standard		
Open Operating Zone	Standard		
Centrally Located Controls	Standard		
Wheel Fenders	Standard		
Log Cradle	Standard		
Log Table	Optional		
Weight (lbs)	487.2 lbs	514.8 lbs	552.3 lbs
Dimensions (LxWxH) Inches	91.5"x47.5"x37"		

*Splitting force and cycle times may vary depending on mechanical and environmental conditions.

SYMBOLS

The rating plate on your machine may show symbols. These represent important information about the product or instructions on its use.

Read these instructions carefully.

Wear eye protection.

Wear hearing protection.

Wear protective gloves.

Wear safety footwear.

Do not remove or tamper with the protection and safety devices.

Don't stand or sit on the log splitter.

Operate the log splitter on level surfaces. Stay off slopes and slippery surfaces.

Do not touch parts that are hot from operation. Serious burns may result.

No smoking, sparks, or flames.

Properly dispose of waste oil!

Keep children and bystanders off and away.

Be sure the engine's switch is off before transporting the machine or performing any maintenance.

Keep hands and fingers away from all pinch points.

Never remove partially split wood from the wedge with your hands. Fingers may become trapped between the split wood.

Keep hands and feet away from moving parts. Moving parts can crush or cut.

Keep hands away from the log stripper.

Always keep body and hands away from pin holes or nozzles that eject hydraulic fluid under pressure. Escaping hydraulic fluid can puncture skin and cause blood poisoning.

Thrown objects.

Check and fill hydraulic oil.

Follow the direction indicated to use the control lever.

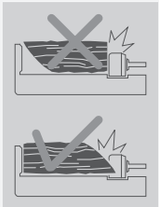

For logs that are not cut square, the longest portion of the log should be rotated down and the most square end placed toward the end plate.

Do not transport with objects on the machine.

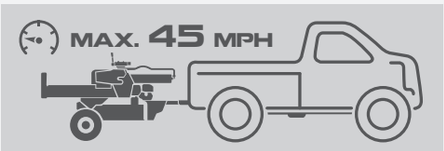

Maximum towing speed of 45 mph.

SAFETY

GENERAL SAFETY RULES

UNDERSTAND YOUR MACHINE

Read this manual and labels affixed to the machine to understand its limitations and potential hazards.

Be thoroughly familiar with the controls and their proper operation. Know how to stop the machine and disengage the controls quickly.

Make sure to read and understand all the instructions and safety precautions as outlined in the **Engine Manufacturer's** manual packed separately with your unit. Do not attempt to operate the machine until you fully understand how to properly operate and maintain the engine and how to avoid accidental injuries and/or property damage.

If the unit is to be used by someone other than original purchaser or loaned, rented, or sold, always provide this manual and any needed safety training before operation. The user can prevent and is responsible for accidents or injuries that may occur to themselves, other people, and property.

Do not force the machine. Use the correct machine for your application. The correct machine will do the job more efficiently and safer at the rate it was designed.

PERSONAL SAFETY

Do not permit children to operate this machine at any time.

Keep children, pets, and other people not using the unit away from the work area. Be alert and shut off unit if anyone enters work area. Keep children under the watchful care of a responsible adult.

Do not operate the machine while under the influence of drugs, alcohol, or any medication that could affect your ability to use it properly.

Dress properly. Wear heavy long pants, boots, and gloves. Do not wear loose clothing, short pants, or jewelry of any kind. Secure long hair so it is above shoulder level. Keep your hair, clothing, and gloves away from moving parts. Loose clothes, jewelry, or long hair can be caught in moving parts.

Protect eyes, face, and head from objects that may be thrown from the unit. Always wear safety goggles or safety glasses with side shields when operating.

Wear appropriate hearing protection.

Always keep hands and feet away from all moving parts during operation. Moving parts can cut or crush body parts.

Always keep hands and feet away from all pinch points.

Do not touch parts that might be hot from operation. Allow parts to cool before attempting to maintain, adjust, or service.

Stay alert, watch what you are doing, and use common sense when operating the machine.

Do not overreach. Do not operate the machine while barefoot or when wearing sandals or similar lightweight footwear. Wear protective footwear that will protect your feet and improve your footing on slippery surfaces. Keep proper footing and balance at all times. This enables better control of the machine in unexpected situations.

INSPECT YOUR MACHINE

Check your machine before starting it. Keep guards in place and in working order. Make sure all nuts, bolts, etc., are securely tightened.

Never operate the machine when it is in need of repair or is in poor mechanical condition. Replace damaged, missing, or failed parts before using it. Check for fuel leaks. Keep the machine in safe working condition.

Do not use the machine if the engine's switch does not turn it on or off. Any gasoline powered machine that can't be controlled with the engine switch is dangerous and must be replaced.

Regularly check to see that keys and adjusting wrenches are removed from the machine area before starting it. A wrench or a key that is left attached to a rotating part of the machine may result in personal injury.

Avoid accidental starting. Be sure the engine's switch is off before transporting the machine or performing any maintenance or service on the unit. Transporting or performing maintenance or service on a machine with its switch on invites accidents.

If the machine should start to vibrate abnormally, stop the engine (motor) and check immediately for the cause. Vibration is generally a warning sign of trouble.

ENGINE SAFETY

This machine is equipped with an internal combustion engine. Do not use on or near any unimproved, forest covered, or brush covered land unless the exhaust system is equipped with a spark arrester meeting applicable local, state, or federal laws.

In the state of California, a spark arrester is required by law. Other states have similar laws. A spark arrester, if used, must be maintained in effective working order by the operator.

Never start or run the engine inside a closed area. The exhaust fumes are dangerous, containing carbon monoxide, an odorless and deadly gas. Operate this unit only in a well-ventilated outdoor area.

Do not tamper with the engine to run it at excessive speeds. The maximum engine speed is preset by the manufacturer and is within safety limits. See engine manual.

Keep a Class B fire extinguisher on hand when operating this log splitter in dry areas as a precautionary measure.

FUEL SAFETY

Fuel is highly flammable, and its vapors can explode if ignited. Take precautions when using to reduce the chance of serious personal injury.

When refilling or draining the fuel tank, use an approved fuel storage container while in a clean, well-ventilated outdoor area. Do not smoke, or allow sparks, open flames, or other sources of ignition near the area while adding fuel or operating the unit. Never fill the fuel tank indoors.

Keep grounded conductive objects, such as tools, away from exposed, live electrical parts and connections to avoid sparking or arcing. These events could ignite fumes or vapors.

Always stop the engine and allow it to cool before filling the fuel tank. Never remove the cap of the fuel tank or add fuel while the engine is running or when the engine is hot. Do not operate the machine with known leaks in the fuel system.

Loosen the fuel tank cap slowly to relieve any pressure in the tank.

Never overfill the fuel tank. Fill the tank to no more than 1/2” below the bottom of the filler neck to provide space for expansion as the heat of the engine can cause fuel to expand.

Replace all fuel tank and container caps securely and wipe up spilled fuel. Never operate the unit without the fuel cap securely in place.

Avoid creating a source of ignition for spilled fuel. If fuel is spilled, do not attempt to start the engine but move the machine away from the area of spillage and avoid creating any source of ignition until fuel vapors have dissipated.

When fuel is spilled on yourself or your clothes, wash your skin and change clothes immediately.

Store fuel in containers specifically designed and approved for this purpose.

Store fuel in a cool, well-ventilated area, safely away from sparks, open flames, or other sources of ignition.

Never store fuel or a machine with fuel in the tank inside a building where fumes may reach a spark, open flame, or any other source of ignition, such as a water heater, furnace, or clothes dryer. Allow the engine to cool before storing in any enclosure.

HYDRAULIC SYSTEM SAFETY

The hydraulic system of the machine requires careful inspection along with the mechanical parts. Be sure to replace frayed, kinked, cracked, or otherwise damaged hydraulic hoses or hydraulic components.

Hydraulic fluid can result in severe burns. Fluid in the hydraulic system can penetrate skin and result in serious injury or death. Be sure to stop the engine and relieve hydraulic pressure before doing any work on hydraulic parts.

Keep body and hands away from pin holes or nozzles that expel hydraulic fluid when under pressure. Use paper or cardboard, not hands, to search for leaks.

Ensure all hydraulic fluid connections are tight and all hydraulic hoses and lines are in good condition before applying pressure to the system.

Do not remove the cap from the hydraulic tank or reservoir while the machine is running. The tank could contain hot oil under pressure, which could result in serious injury.

Do not adjust the pressure setting on the hydraulic pump or valve.

If injured by escaping fluid, no matter how small the wound is, see a doctor at once. A typical injection injury may be a small wound that does not look serious. However, severe infection or reaction can result if proper medical treatment is not administered immediately by a doctor who is familiar with injection injuries.

SPECIFIC SAFETY RULES

PREPARATION OF THE LOG

Both ends of the log should be cut as square as possible to prevent the log from rotating out of the splitter during operation.

Never split logs greater than the specified log capacity.

Do not operate the log splitter on icy, wet, muddy, or slippery ground. Only operate your log splitter on level ground.

> ⚠ *Operating on a slope could cause the log splitter to roll over or logs to fall off the equipment, which could result in injury.*

Do not move the log splitter over hilly or uneven terrain without a tow vehicle or adequate help.

Keep the work area free of clutter. Remove split wood from around the log splitter immediately after each use to avoid potential tripping.

OPERATOR ZONE

This unit is designed to be operated by one person located in the operator zone as shown in the following diagrams.

Operate the unit only when standing in the operator zone.

Always stop the unit and allow moving parts to stop before leaving operation zone. Do not leave a running unit unattended.

> ⚠ *Many accidents occur when more than one person operates the log splitter.*
>
> *The adult who loads and stabilizes the log must be the person who operates the control handle.*

HORIZONTAL OPERATING POSITION

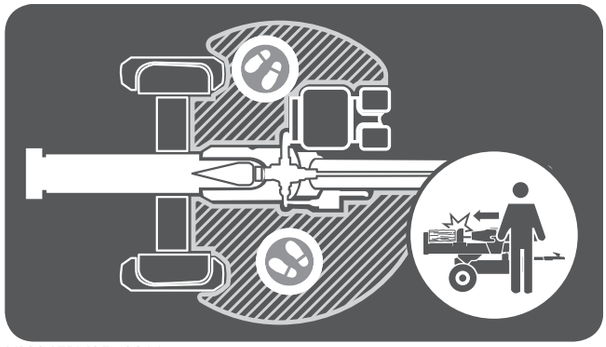

VERTICAL OPERATING POSITION

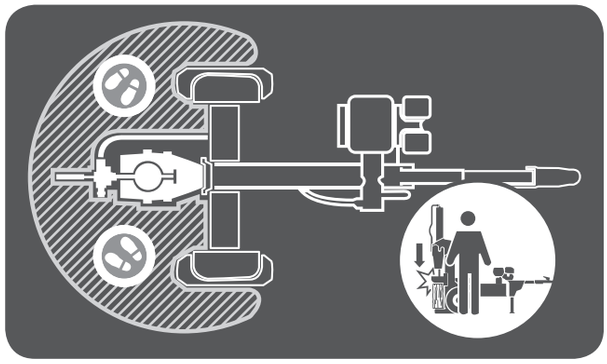

MACHINE USE AND CARE

Never operate the machine without good visibility or light.

Never attempt to split wood across the grain. The log splitter was not designed for cross-grain splitting.

Always block the front and back of both wheels to prevent unintended movement.

Hold the bark side of the logs when loading or positioning, never the ends. Never place your hands or any part of your body between a log and any part of the log splitter.

Do not straddle or step over the log splitter during operation.

Do not reach or bend over the log splitter to pick up a log.

When stabilizing a log with the left hand, remove your hand when the wedge contacts the log or serious injury may occur.

Never attempt to split more than one log at a time.

Do not attempt to load your log splitter when the ram or wedge is in motion.

Use your hand to operate the control lever on the valve. Do not use your foot, a rope, or any extension device.

Do not move the log splitter while the engine is running.

TOWING SAFETY

Check all local and state regulations regarding towing, licensing, and lights before towing your log splitter.

Before towing the log splitter, check tires for excessive wear, cuts, or damage. Check for proper tire inflation. Add air as required. Do not over inflate tires. Serious injury can result if tires explode.

Check before towing to make sure the log splitter is correctly and securely attached to the towing vehicle and the safety chains are secured to the hitch or bumper of the vehicle with enough slack to allow turning. Always use a class I, 2" ball with this log splitter.

Make sure the coupler is tight before towing and after towing 50 miles.

Never transport cargo on the log splitter.

Never allow anyone to ride or sit on the log splitter.

Always stop the engine, lock the beam in the horizontal position, and close the fuel shut-off valve when transporting the unit.

Use extra care when towing the log splitter. Do not exceed 45 mph. Towing the log splitter at a speed greater than 45 mph could result in loss of control, damage to the equipment, serious injury, or death.

Avoid sharp turns and steep angles. Avoid large holes or ditches when towing the equipment. Always be careful when backing up with your log splitter when towing; it could jackknife. Use caution when backing up; a spotter outside the vehicle is highly recommended. Disconnect the log splitter from the towing vehicle before operating it.

UNPACKING THE CONTAINER

Use the screwdriver and hammer to open all the side locks. Remove all the polywood plates. Remove all the loose parts on the bottom pallets. Use scissors or a knife to cut all the straps. (See ***Figure 1a***)

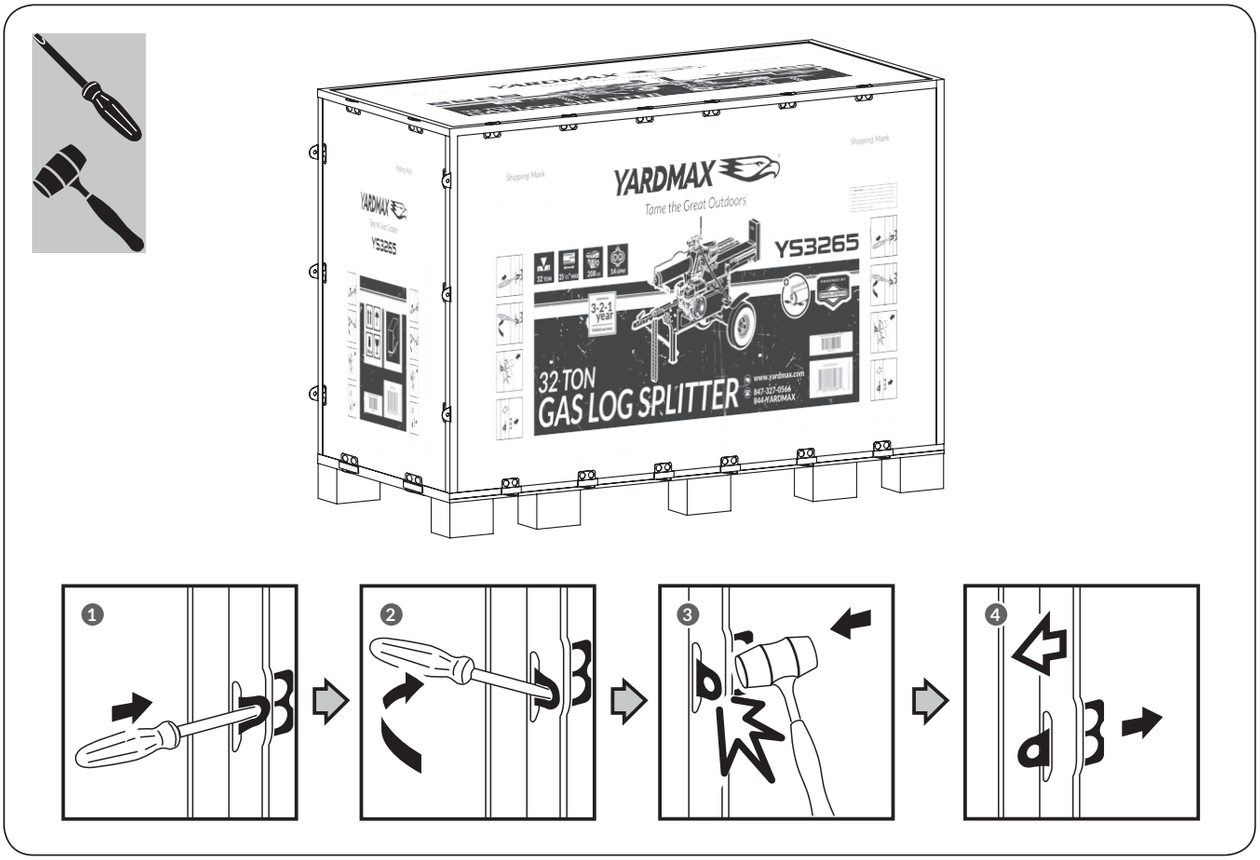

Figure 1a

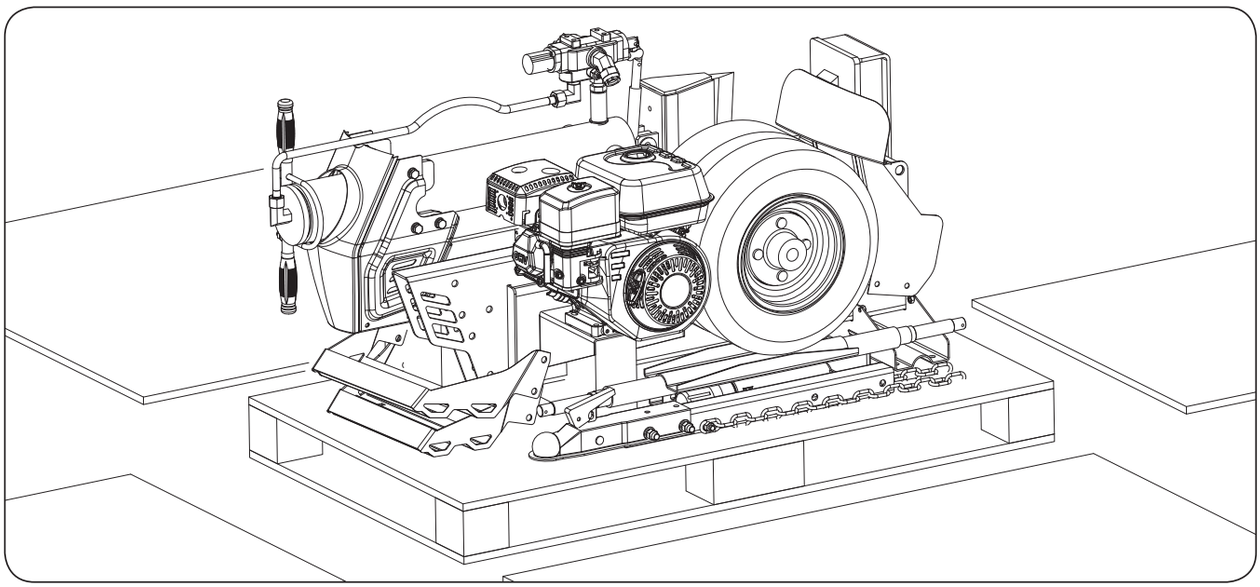

Figure 1b

CONTENTS SUPPLIED

Your YARDMAX log splitter comes partially assembled and contains the following:

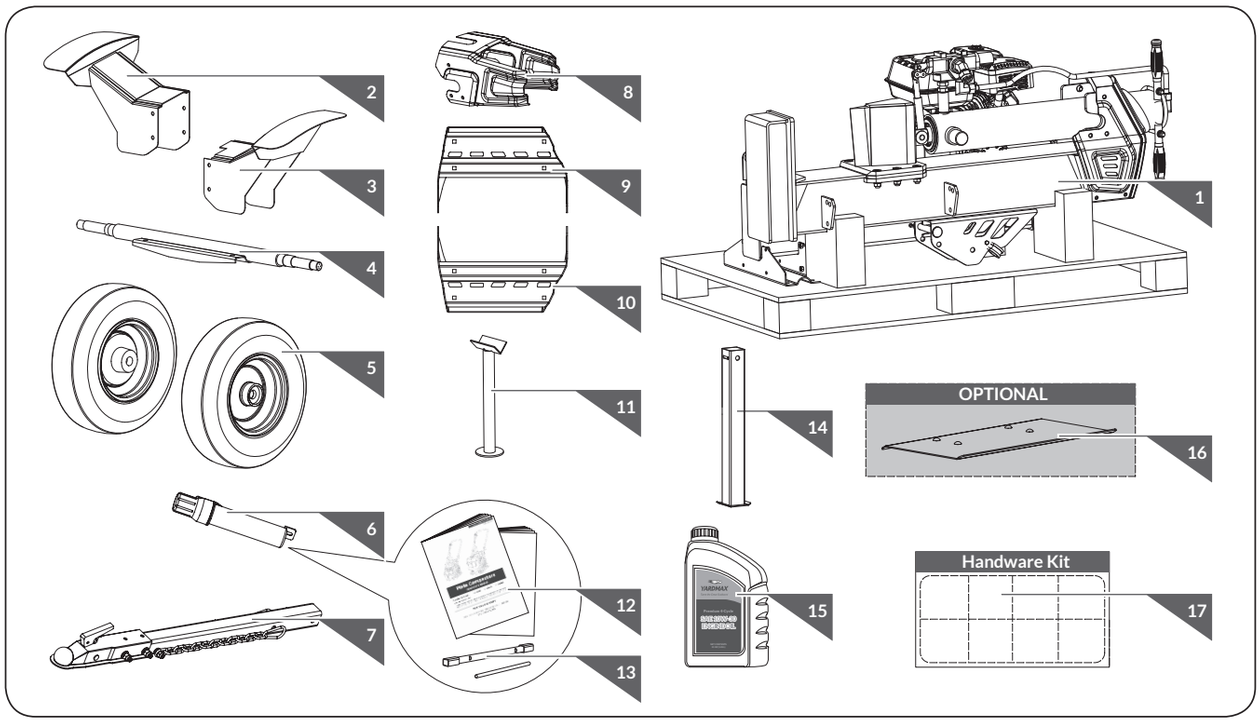

1. Beam and Reservoir with Engine
2. Fender (Left)
3. Fender (Right)
4. Wheel Axle
5. Wheels
6. Manual Tube

7. Tow Bar
8. Log Stripper
9. Log Cradle (Left)
10. Log Cradle (Right)
11. Wedge Landing Supporter
12. Operator's Manual and Engine Manual
13. Tools for Spark Plug Assembly
14. Support leg
15. Engine Oil
16. Log Table (Optional)
17. Hardware Kit, Including:

	M12 X 80	X 2	1
	M12 X 30	X 4	2
	M22	X 1	3
	4 X 50	X 1	
		X 1	
	M22	X 1	4
	4 X 50	X 1	
		X 1	
		X 1	5
		X 1	
	6 X 40	X 1	
	M8 X 20	X 2	6
	18 X 135	X 1	7
	Bridge Pin	X 1	
	M8 X 20	X 8	8
	M10 X 35	X 6	9 YS3265
	M10 X 35	X 4	9 YS3665 YS4065
	M10 X 20	X 2	
	M12 X 35	X 8	10

OPTIONAL

	M10 X 25	X 4	1

ASSEMBLY

This log splitter was partially assembled at the factory. To assemble your machine follow the below instructions.

WEDGE LANDING SUPPORTER

1. Holding the cylinder handle to slowly drag the cylinder about 13.8 inch outward (See ***Figure 2a***, illustration 1). then put the wedge landing supporter against the beam base and wedge (See ***Figure 2a***, illustration 2).

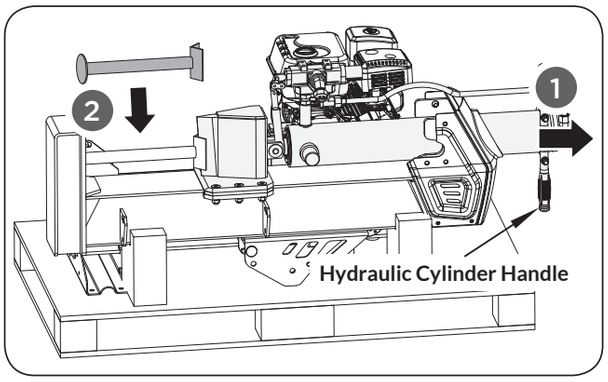

Figure 2a

2. Holding the cylinder handle up, Using the bottom wooden U-shaped block as support, then make sure the beam base safely grounded at a certain angle (See ***Figure 2b***, illustration 3). Need two people work together to let the whole beam in vertical position stably.

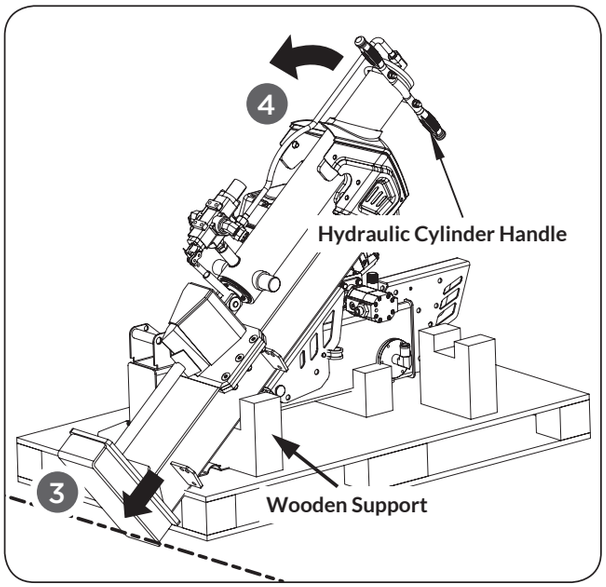

Figure 2b

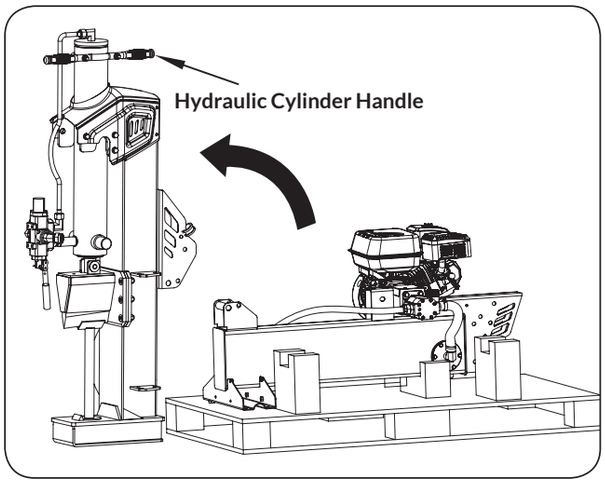

Figure 2c

Make sure one person hold the beam in vertical position safely.

TOW BAR

Insert the tow bar into the tank bracket and align the holes. Connect and tighten the tow bar to the tank by using the M12x80 bolts, flat washers, spring washers, and nuts. (See ***Figure 3***)

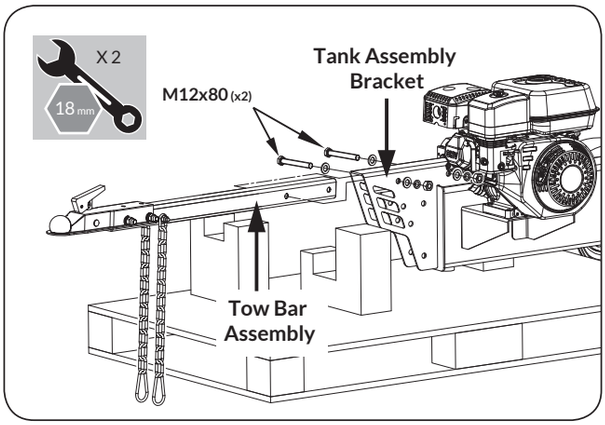

Figure 3

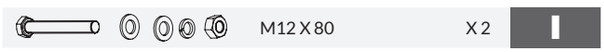

WHEEL

1. Remove the two anti-dust sleeves from the wheel axle.

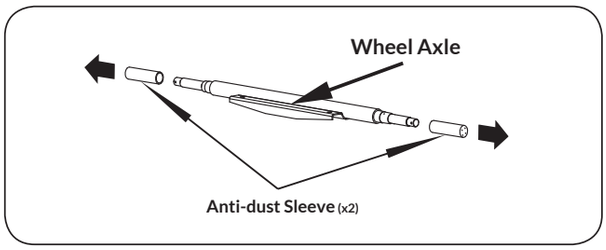

Figure 4a

2. Take the axle with a lower bracket and attach it to the upper bracket.

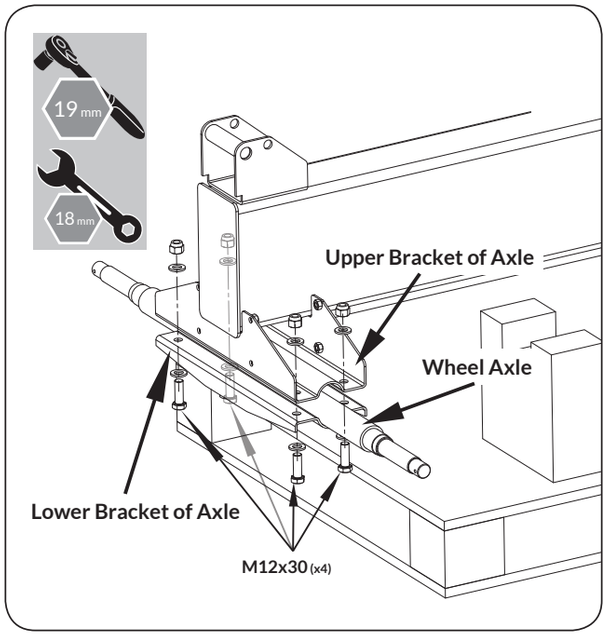

Figure 4b

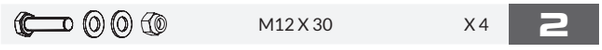

3. Remove the anti-dust sleeves from the two wheels. Take the anti-dust washers and roller bearings from the wheels and set aside for later use.

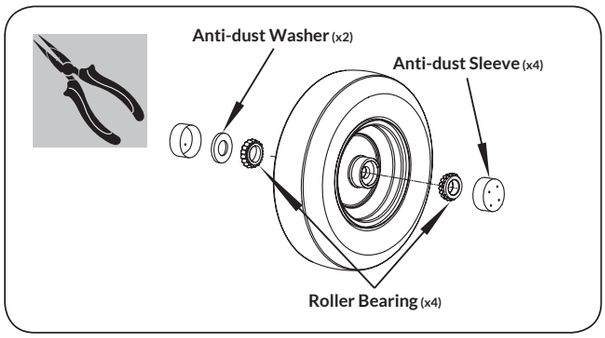

Figure 4c

4. Slide the anti-dust washer and one roller bearing onto the axle. Use a soft-faced hammer to tap the roller bearing lightly to make sure the bearing is in the right position.
5. Slide the wheel with the valve stem facing out to the wheel axle and the other roller bearing, then put the wheel washer against the bearing. Use a 32mm socket to tighten the axle nut completely. (See ***Figure 4d***)
6. Turn the wheel to ensure proper bearing seating.
7. Loosen the axle nut until loose enough to turn the wheel with your fingers.
8. Retighten the axle nut until "finger tight."
9. Insert the cotter pin through the hole in axle. Bend and spread the prongs in opposite directions so the axle nut will not come off (make sure the tire spins freely).

Installation of the cotter pin is important and required. Failure to install the cotter pin can result in loss of wheel retention. Always assemble using a new cotter pin. Do not reuse.

10. Use a soft-faced hammer to tap the anti-dust washer in the right position.
11. Align the wheel cap against the wheel hub. Using a soft-faced hammer, tap lightly to make sure to install the wheel cap onto the wheel hub properly. (Only assemble one side of the wheel assembly. The other side will be assembled when mounting the entire assembly to the unit.)

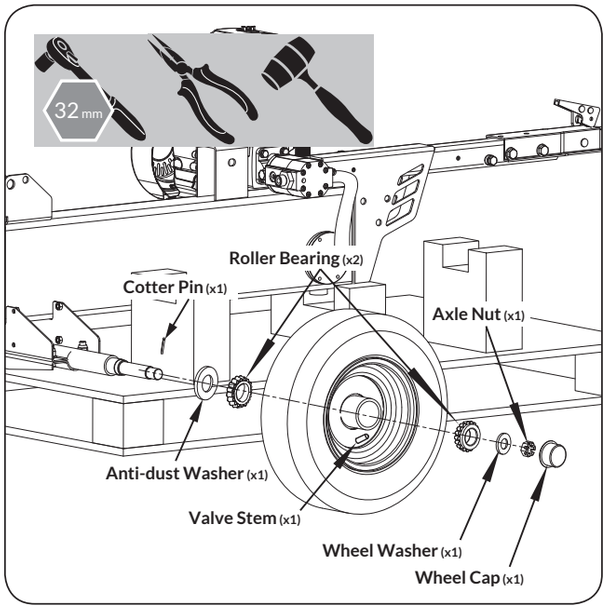

Figure 4d

	M22	X 1	3
	4 X 50	X 1	
		X 1	

12. Follow the same procedure to assemble the other wheel. (Follow steps 4 – 11 under wheel assembly.)

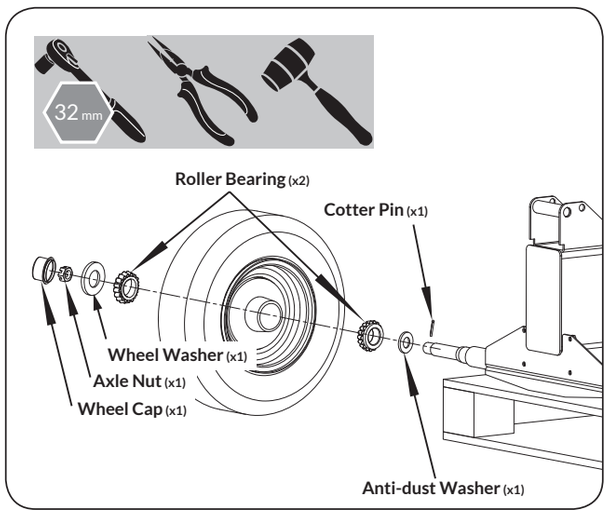

Figure 4e

	M22	X 1	4
	4 X 50	X 1	
		X 1	

SUPPORT LEG

1. Align the support leg to the upper hole on the unit. Insert the U-shaped lock pin to hold the support leg in place.
2. Slightly lift the machine by the tow bar while rotating it so that the support leg can drop to the down position supporting the machine on the ground
3. Fully insert the U-shaped lock pin. Make sure the short-end go through the lower hole.
4. To secure the U-Shaped lock pin. Insert the roll pin thru the location hole at the top of the support leg and into the U-shaped lock pin hole.
5. Slide the spring and flat washer over the end of the U-shaped lock pin. Secure them in place with the other roll pin.

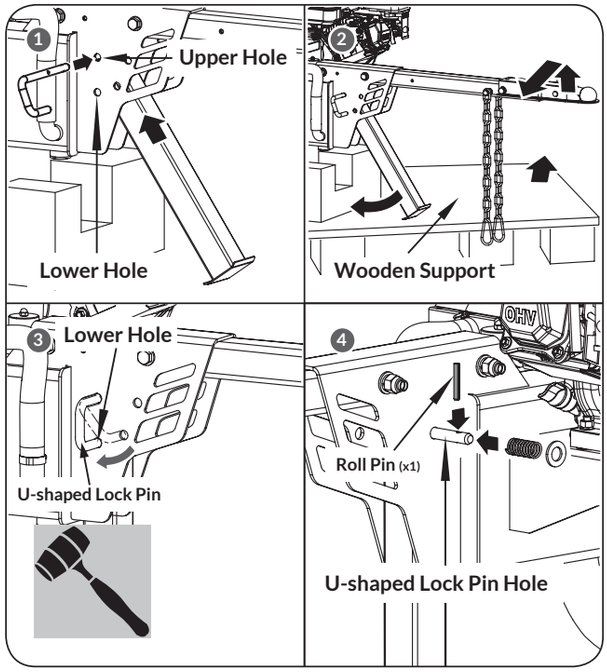

Figure 5

		X 1	5
		X 1	
	6 X 40	X 1	

MANUAL TUBE

1. Remove the cap of the manual tube. Align the holes in the manual tube with the holes in the tow bar, insert and tighten bolts and washers. (See ***Figure 6***)
2. Reattach the cap.

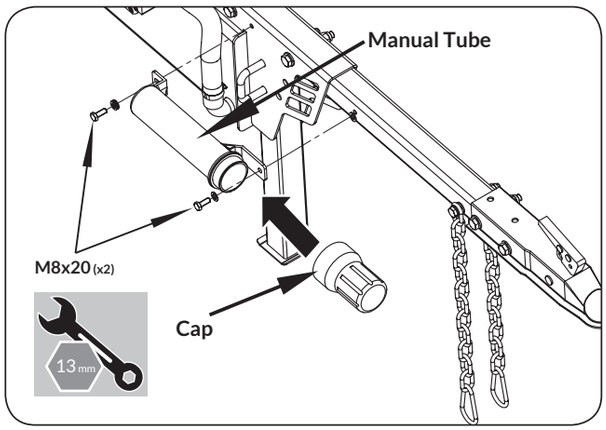

Figure 6

M8 X 20	X 2	6

BEAM PIVOT BRACKET

1. One person holds the beam steady, and the other person lifts the tow bar, rotates to adjust the position, and aligns the holes in the tank pivot amount plate with the holes in the beam pivot bracket. Insert the pivot bolt and secure with the bridge pin. (See ***Figure 7***.)

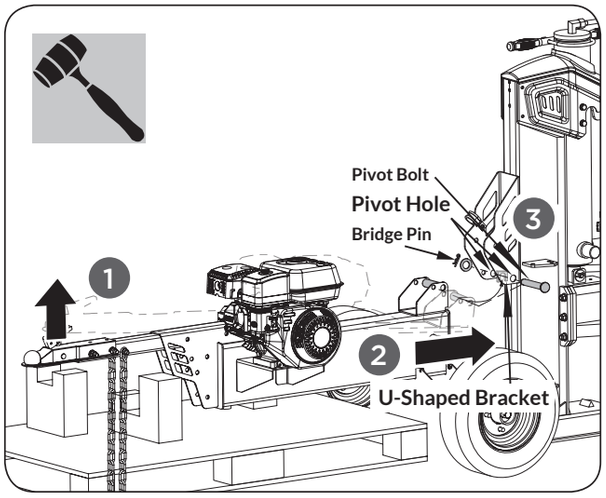

Figure 7

18 X 135	X 1	7
Bridge Pin	X 1	

FENDER

Align the left fender to the tank assembly. Insert the M8x20 bolts, spring washers, flat washers, and tighten by using a 13mm wrench. (See ***Figure 8***)

Follow the same procedure to assemble the right fender.

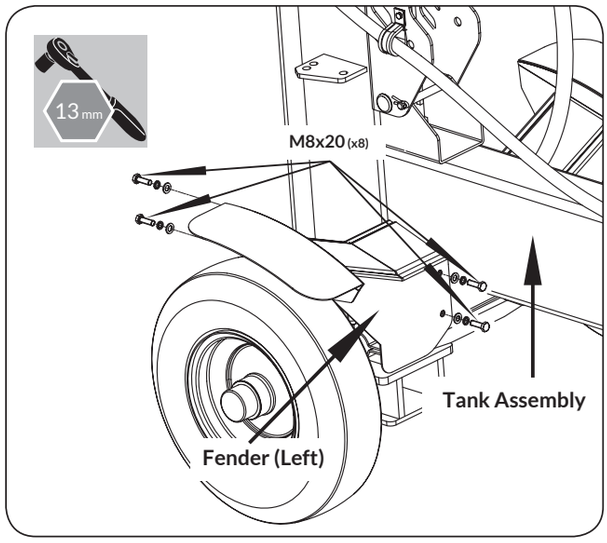

Figure 8

M8 X 20	X 8	8

VERTICAL POSITION TO HORIZONTAL POSITION

1. Hold the hydraulic cylinder handle and slowly lower the beam. Make sure the beam is locked in the horizontal position.

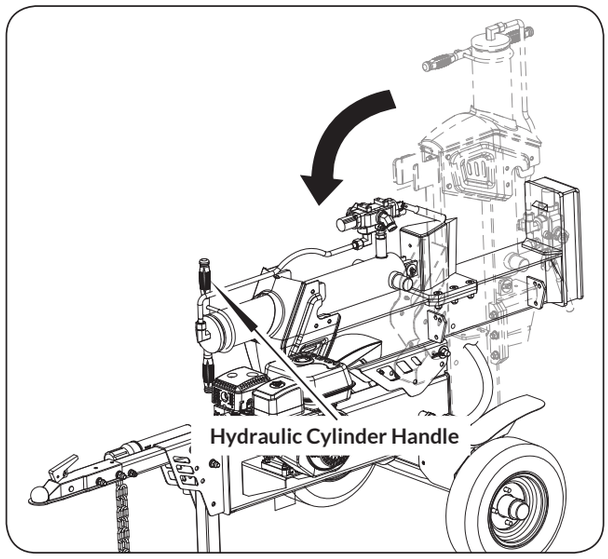

Figure 9

Do not let the beam suddenly drop. Keep hands and fingers clear of pinch or crush points at all times.

HYDRAULIC CYLINDER HANDLE

Loosen two M10 nuts by using a 16mm wrench. Change the handle from the vertical position to the horizontal position. Secure and tighten the two M10 nuts. (See ***Figure 10***)

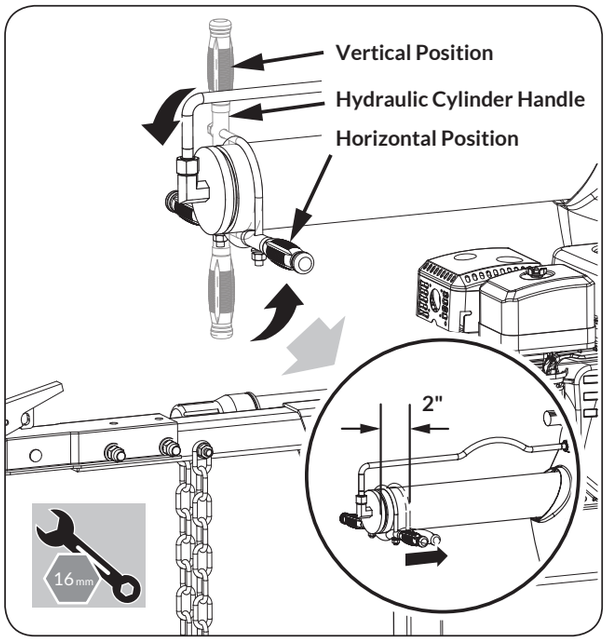

Figure 10

LOG STRIPPER

1. Holding the hydraulic cylinder handle, pull out the cylinder slowly and in a straight line until the output shaft in the cylinder is against the trunnion mount and locked in the U-shaped groove.

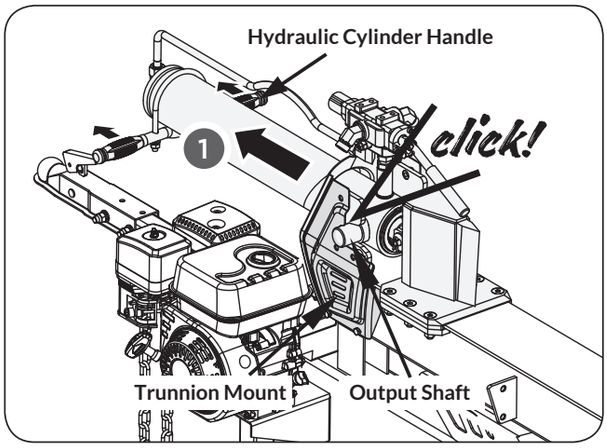

Figure 11a

2. Align holes in the log stripper with the holes in the trunnion mount.

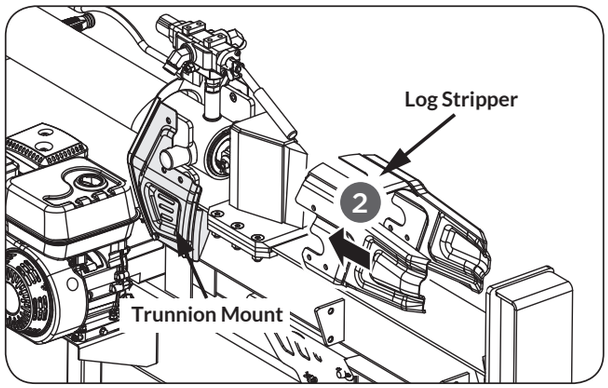

Figure 11b

3. Install the log stripper by tightening the M10x35 bolts, spring washers, and flat washers. (See ***Figure 11c***) ***(YS3265 ONLY)***

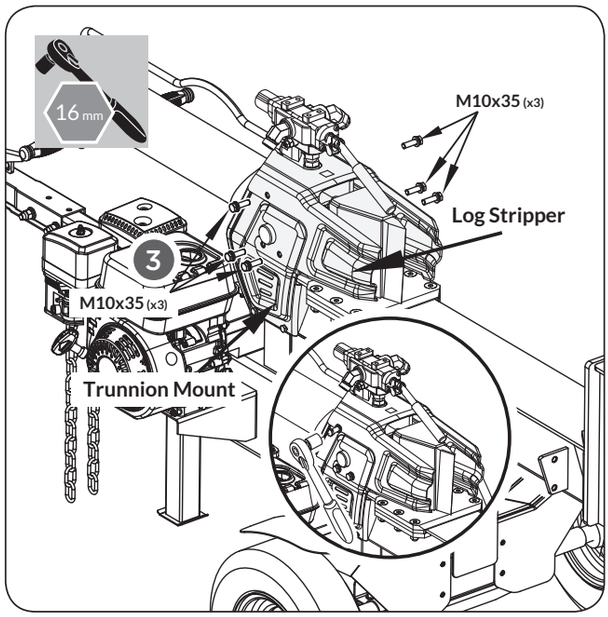

Figure 11c

	M10 X 35	X 6	9 YS3265

3. Install the log stripper by tightening the M10x35 and M10x20 bolts, spring washers, and flat washers. (See ***Figure 11d***) ***(YS3665 and YS4065 ONLY)***

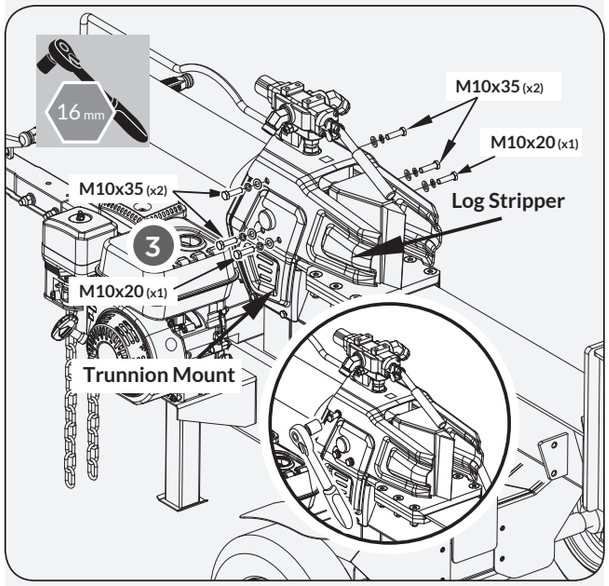

Figure 11d

	M10 X 35	X 4	9 YS3665 YS4065
	M10 X 20	X 2	

HOSES

1. Assemble the High Pressure Supply Hose and Low Pressure Return Hose onto the control valve. (See ***Figure 12***)

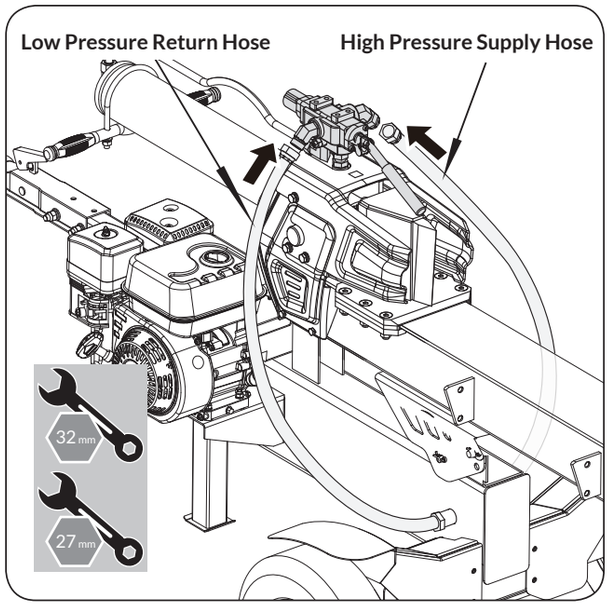

Figure 12

SPLIT CONTROL LEVER

1. The control handle is shipped hanging from the valve on the handle link. Remove the pin and cotter pin from the control handle. Move the control lever to the vertical Neutral positon (shown in circle on illustration ***Figure 13***.)
2. Reinstall the pin and cotter pin to the control handle.

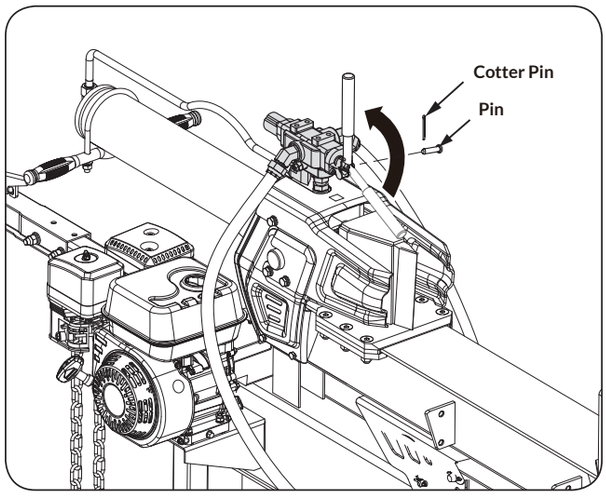

Figure 13

LOG CRADLES

1. Align the holes on the left log cradle to the inside and lower holes on the beam mounts. Insert the M12x35 bolts, flat washers, nuts and securely tighten.
2. Follow step 1 to assemble the right log cradle. (See ***Figure 14***)

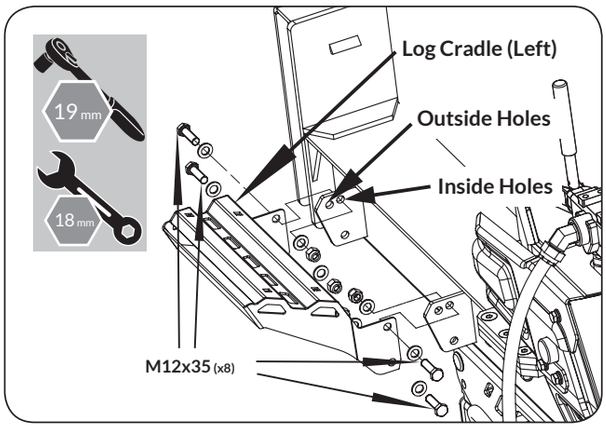

Figure 14

M12 X 35 X 8 10

LOG TABLE (OPTIONAL)

Refer to ***Figures 15a*** and ***15b*** to install the work table. Remove the bolts, flat washers, and nuts from the inside holes. Move the log cradle from the incline position to the horizontal position. Align holes on the log cradle with the outside holes on the beam mount. Reinstall bolts, flat washers, and nuts.

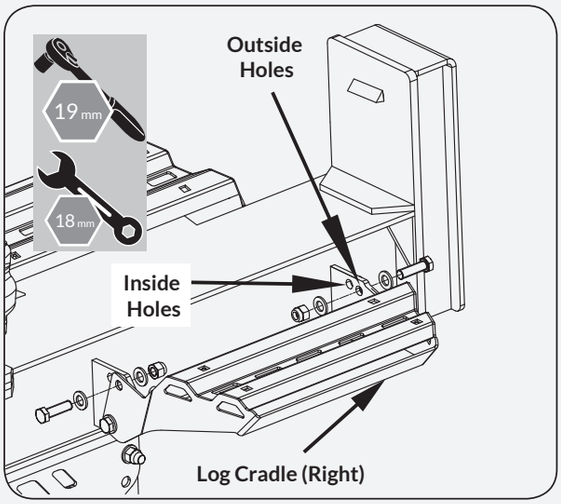

Figure 15a

Place the work table over the holes in the log cradle and align the 4 holes from the work table plate and log cradle. Insert and tighten the M10x25 bolts, spring washers, flat washers, and nuts.

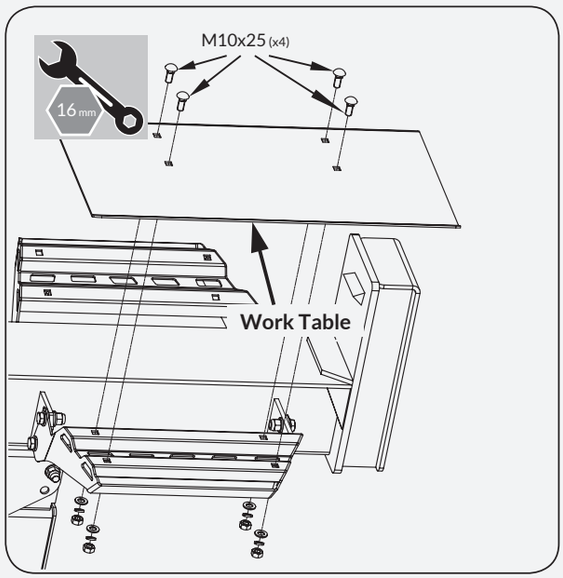

Figure 15b

M10 X 25 X 4 I

KNOW YOUR MACHINE

FEATURES AND CONTROLS

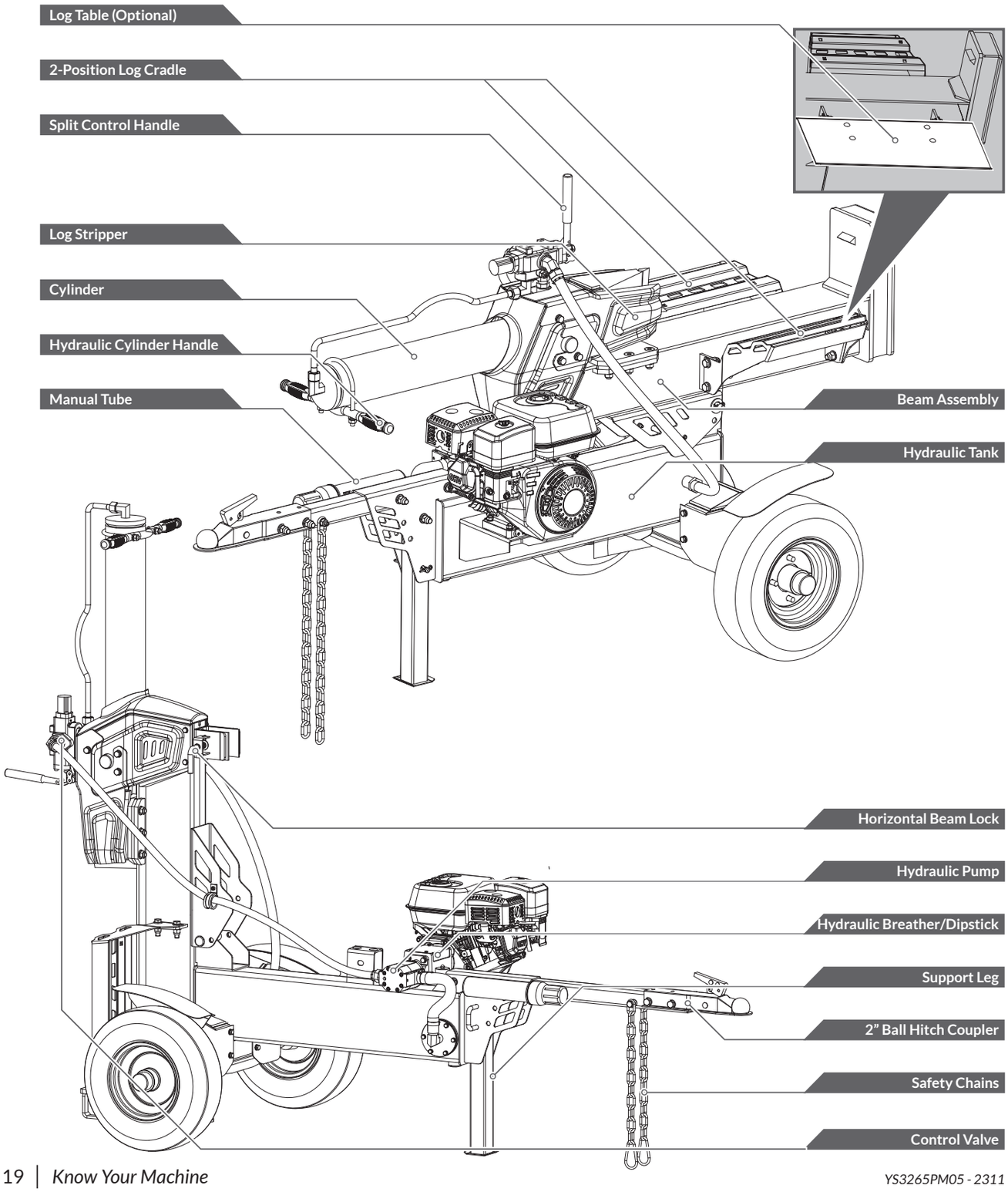

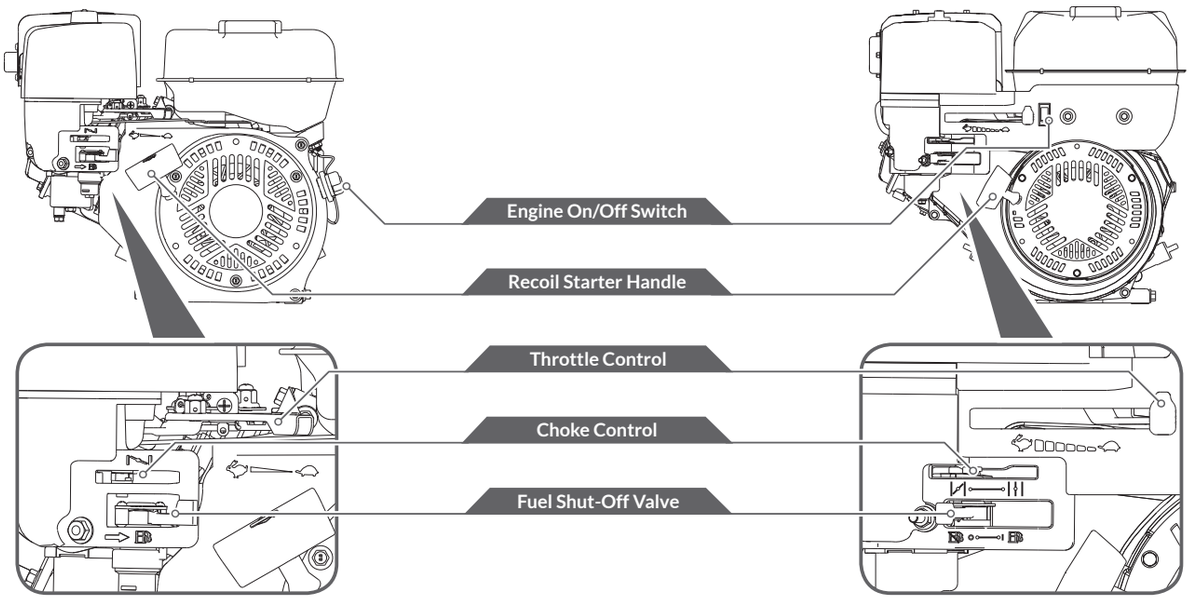

2-POSITION LOG CRADLE

- The log cradles are designed to catch the log after it is split.
- 2-position function – The first positon is to center logs on the beam. The second position provides a flat surface and worktable on which to put logs.

SPLIT CONTROL HANDLE

- The control handle is used to move the wedge up and down to split logs. The control handle has three positions: Forward, Neutral, and Reverse. See the **"operation"** section for instruction.

MANUAL TUBE

- Keep manuals safely in the tube.

HORIZONTAL BEAM LOCK

- The beam lock bracket is used to secure the beam in the horizontal position.

HYDRAULIC CYLINDER HANDLE

- The hydraulic cylinder handle is included for easy transition from horizontal to vertical.

2" BALL HITCH COUPLER

- The coupler hitch is at the end of the tow bar and attaches to a tow ball for transportation purposes.

LOG STRIPPER

- The log stripper is designed to remove any partially split wood from the wedge. This may occur while splitting large diameter wood or freshly cut wood.

BEAM ASSEMBLY

- The U-beam structural design is significantly stronger than a typical I-beam design.

LOG TABLE (OPTIONAL)

- A log table/platform can be mounted on the log cradle directly.

ENGINE ON/OFF SWITCH

- The engine switch has two positions. OFF - engine will not start or run. ON - engine will start and run.

RECOIL STARTER HANDLE

- The handle is used to start the engine.

FUEL SHUT-OFF VALVE

- The fuel shut – off has two position. **CLOSED** ( ) - use this position to service, transport, or store the unit.
- **OPEN** ( ) - use this position to run the unit.

CHOKE CONTROL

» The choke control is used to choke the carburetor and assist in starting the engine. The choke control slides between the **CHOKE CLOSED** and **CHOKE OPEN** positions.

THROTTLE CONTROL

» The throttle control regulates the speed of the engine and will shut off the engine when it is moved to the **STOP** position. The throttle control moves between **FAST**, **SLOW**, and **STOP** positions.

OPERATION

Many accidents occur when more than one person operates the log splitter.

If a helper is assisting in loading logs to be split, never operate the controls until the helper is clear of the area.

The engine is shipped without oil. Do not start the engine before adding oil.

ADD OIL TO ENGINE

1. Make sure the log splitter is on a flat, level surface.
2. Remove the oil fill cap/dipstick to add oil.

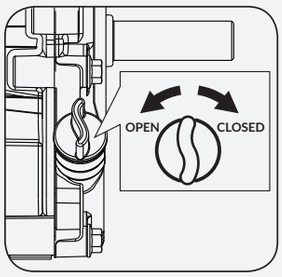

3. Using a funnel, add oil up to the **FULL** mark on the dipstick. (See engine manual for oil capacity, oil recommendation, and location of fill cap.)

DO NOT OVERFILL. Check engine oil level daily and add as needed.

ADD GASOLINE TO ENGINE

Gasoline is highly flammable and explosive. You can be burned or seriously injured when handling fuel. Use extreme care when handling gasoline.

Fill the fuel tank outdoors, never indoors. Gasoline vapors can ignite if they collect inside an enclosure. Explosion can result.

1. The engine must be off and allowed to cool at least two minutes before adding fuel.
2. Remove the fuel filler cap and fill the tank. (See engine manual for fuel capacity, fuel recommendation, and location of fuel cap.)

IMPORTANT: DO NOT OVERFILL!

This equipment and/or its engine may include evaporative emissions control system components, required to meet EPA and/or CARB regulations, that will only function properly when the fuel tank has been filled to the recommended level. Overfilling may cause permanent damage to evaporative emissions control system components. Filling to the recommended level ensures a vapor gap required to allow for fuel expansion. Pay close attention while filling the fuel tank to ensure that the recommended fuel level inside the tank is not exceeded. Use a portable gasoline container with an appropriately sized dispensing spout when filling the tank. Do not use a funnel or other device that obstructs the view of the tank filling process.

3. Reinstall the fuel cap and tighten. Always clean up spilled fuel.

STARTING ENGINE

1. Make sure the control lever is in the neutral position.

2. Move the engine switch to the ON position.

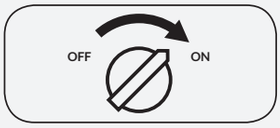

3. Open the fuel shut-off valve.

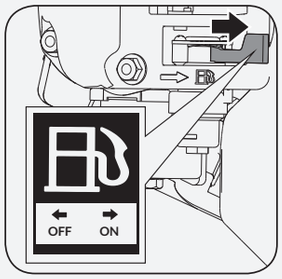

4. Move the choke lever to the CLOSED position.

   » *If the engine is hot, closing the choke is not necessary.*

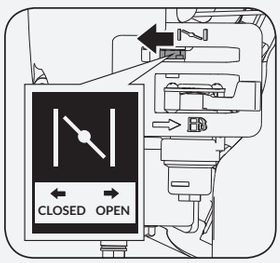

5. Move the throttle lever slightly to the FAST speed.

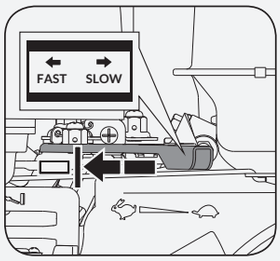

6. Pull the recoil starter until engine compression has become difficult to pull. Let the recoil return to the home position, then pull quickly to start the engine. Repeat steps as needed. Fully open the choke and set the throttle to the FAST position, before operating the unit.

> ⚠ *Rapid retraction of the starter cord (kickback) will pull your handand arm toward the engine faster than you can let go. Broken bones, fractures, bruises, or sprains could result.*

STOP ENGINE

Return the cylinder to fully retracted position or home position. Move the Throttle lever to SLOW (🐢). Move the engine switch to OFF. Close the fuel shut-off valve (⛽).

> ⚠ *Sudden stopping at a high speed under a heavy load is not recommended. Engine damage may result.*

SPLIT CONTROL HANDLE

Forward position – Move the lever in this direction to extend the cylinder toward the spinner foot plate. Keep pressure on the lever until the log splits. The lever does not lock in this position. Release as soon as the log is split or the cylinder is fully extended. (See ***Figure 16a*** and ***Figure 16b***).

> ⚠ *Never operate through the relief valve for more than 5 seconds.*

» *The splitter wedge is designed to reach the full extension before contacting the foot plate.*

» *To extend the life of the hydraulic cylinder, avoid "bottoming out" the wedge plate to the foot piece. To conform with industry safety recommendations, the wedge stops 1.5 inches from the end of the stroke.*

> ⚠ *Cracks in logs can close quickly and pinch fingers. Keep fingers away from any cracks that open in partially split logs.*

Neutral position – In this position the cylinder does not move even though the engine is running.

Reverse position – Move the lever in this position to retract the cylinder. Push the lever fully in this direction to lock it return mode. The lever will automatically return to the neutral position once the cylinder fully retracts.

> ⚠ *Keep hands and fingers away from the splitter wedge and log stripper during cylinder retraction.*

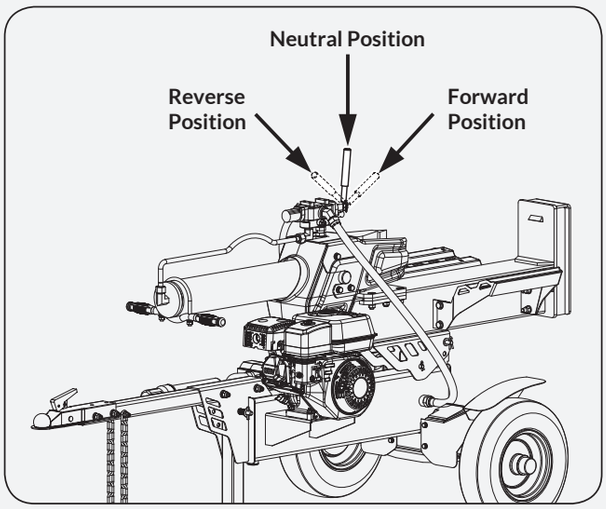

Figure 16a

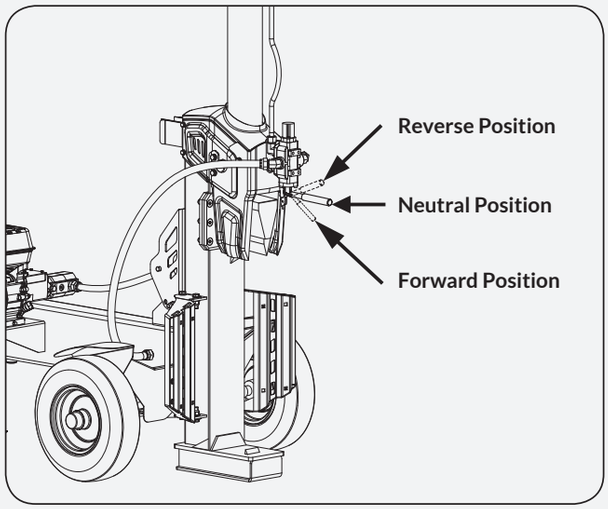

Figure 16b

STUCK LOG PROCEDURE

If a log does not split completely and becomes stuck on the wedge, never attempt to remove it by modifying the splitter or adding attachments to the splitter.

Move the control lever to the Reverse positon and allow the cylinder to retract until the stuck log contacts the stripper plates. Continue to retract the cylinder until the log is dislodged from the wedge.

Do not use the unit if the stripper plates are bent or damaged. Bent or damaged stripper plates must be repaired or replaced before use.

CONVERSION BETWEEN HORIZONTAL SPLITTING POSITION AND VERTICAL SPLITTING POSITION

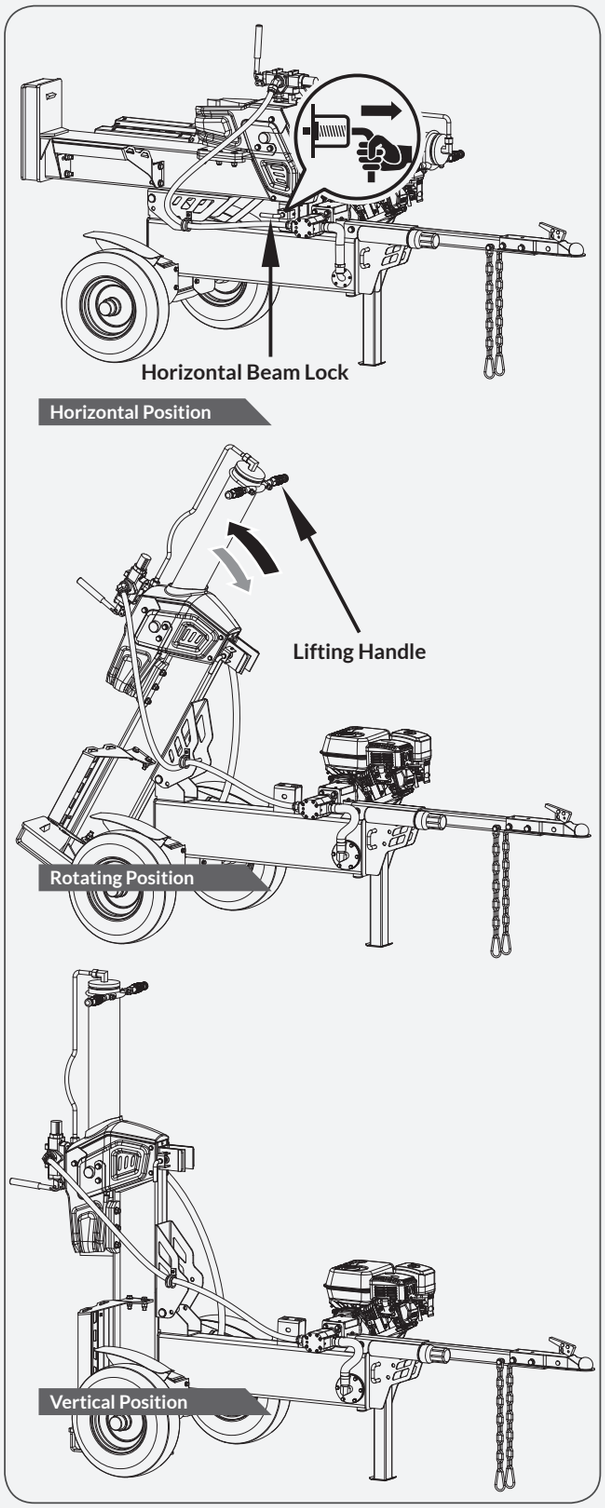

TRANSPORTING

MOVING BY HANDS

The log splitter is heavy. It can crush and cause serious injury if it rolls out of control or tips over.

Follow the instructions below for safely moving the log splitter.

1. Make sure the log splitter is locked in the horizontal position with latch rod before moving.

Make sure the log splitter engine is off. Never move the log splitter with its engine running.

2. Turn the fuel shut-off valve to the OFF position. This prevents carburetor flooding and reduces the chance of fuel leakage. Refer to the engine manual for fuel valve location.
3. Lock the support leg in the DOWN position before you move the log splitter.
4. Move the log splitter by hand to desired work site.

Do not move the log splitter up or down hills by hand.

Never allow anyone to sit or ride on the log splitter.

Never transport cargo or wood on the log splitter.

TOWING BY VEHICLE

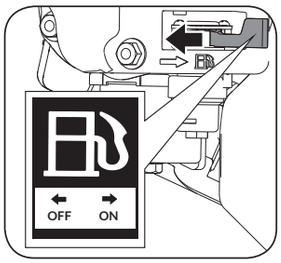

1. Turn the fuel shut-off valve off. This prevents fuel from flooding the engine.
2. Check the tires to ensure they are fully inflated to 30 PSI for proper functionality.

Do not overinflate tires. Serious injury can occur if tire explodes.

When seating a bead after repair, do not exceed 30 PSI. Pressures higher than 30 PSI can cause the tire and wheel to rupture and explode.

3. Make sure hitch is in good working order.
4. Check safety chains. Two safety chains must be used while towing. Cross safety chains under the coupler, allowing only enough slack for vehicle turns.
5. Pull the U-shaped lock pin away from the machine. Lift the machine with the other hand by the tow bar. Rotate the U-shaped lock pin to lift the support leg to the horizontal position. Release to lock in the support leg horizontally.

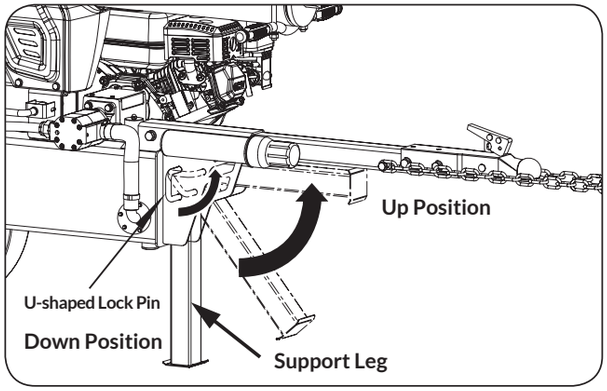

Figure 17

6. Lower the machine down and lock the tow coupler onto the hitch ball. Tow the log splitter carefully to desired work site.

Be aware of the added length of the splitter.

Never tow this log splitter over 45 mph. Faster speeds may result in loss of control.

Drive slowly and take extra caution when traveling over rough terrain.

If towing on a public road, make sure to comply with all local, state, and federal towing requirements. It is the sole responsibility of the purchaser to obtain licensing, trailer lights, safety chains, or signage as needed to comply.

Turn off the towing vehicle before leaving the splitter unattended.

7. Lock the support leg in the DOWN position and disconnect from vehicle.

Never operate the log splitter while it is attached to the vehicle.

MAINTENANCE

Inspect and maintain the log splitter before each use. If the log splitter has been used previously, it must be inspected and maintained before each subsequent use.

Always shut off the engine and relieve system pressure before inspecting, cleaning, adjusting, or repairing the splitter. Relieve system pressure by moving the split control lever back and forth several times.

Remove debris from the engine, muffler, and moving parts. Debris on a hot engine can be a fire hazard. Clean debris and chaff from the engine cylinder head, cylinder head fins, blower housing rotating screen, and muffler areas.

Avoid contact with hot muffler.

Debris on moving parts can cause excess wear. Clear debris from the slide beam, wedge, and end plate.

OIL DRAINING

Use a drain pan to aid in the removal of all used oil and particles.

Remove oil drain plug to drain oil from the hydraulic transmission system. Examine oil for metal chips as a precaution to future problems.

After oil has been completely drained from the machine, reinstall drain plug.

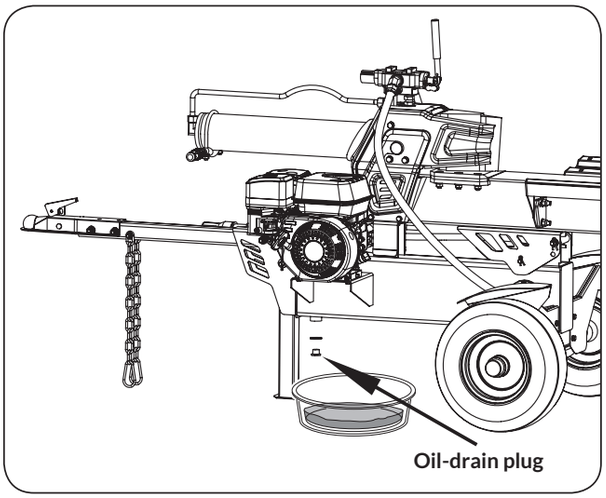

Figure 18

ADD HYDRAULIC OIL TO OIL TANK

1. Make sure the log splitter is on a flat, level surface.
2. Remove the oil dipstick from the oil tank.

Never remove the hydraulic oil dipstick when the engine is running or hot. Hot oil can escape causing severe burns. Allow the log splitter to cool completely before removing the hydraulic oil dipstick.

3. The recommended hydraulic oil type:
   10W AW32
   ASLE H-150
   ISO 32

4. Make sure the hydraulic oil level reaches the upper line of the dipstick.

Completely install the dipstick when checking oil level.

5. Start the engine and use the control valve handle to extend and retract the wedge five times to remove air from the high pressure lines.
6. With the wedge retracted and engine off, check the oil level again. Fill if necessary.
7. Cycle the cylinder again until it has a constant speed. This indicates that all air has been expelled.

STORAGE

Follow the instructions below for storing your log splitter between uses.

1. Retract the wedge completely to keep the rod protected from corrosion.
2. Allow the machine to cool 5 minutes before storing.
3. Clear the debris from the beam, wedge, and end plate. Use a damp cloth to clear exterior surfaces of the engine and log splitter. Use a soft bristle brush to remove excess dirt and oil. Use an air compressor (25 PSI) to clear dirt and small debris. Wipe the beam, wedge, and all metal parts with an oil rag to prevent corrosion.

Never spray the engine or log splitter with a pressure washer. Water can contaminate the fuel system and can enter the engine and damage the engine.

4. Refer to the engine manual for proper engine storage instructions.

Gasoline can become stale when stored over 30 days. Stale fuel can cause acid and gum deposits that form in the fuel system or on carburetor parts. For engine fuel that is stored less than 30 days, add a fuel stabilizer to keep the fuel fresh. Turn the fuel valve lever to the off position. If fuel is stored over 30 days, then drain the fuel tank as stated in the engine manual.

Always drain fuel from the tank in an outdoor, well-ventilated area.

Stay away from sources of heat, flame, or sparks while handling fuel.

Clean up fuel spills immediately.

5. Store the log splitter in a location away from corrosive materials, sources of heat, open flames, sparks, or pilot lights.

Never store the log splitter inside where there is a source of heat or an open flame, spark, or pilot light, such as a water heater, space heater, furnace, clothes dryer, or other gas appliance. EVEN IF the log splitter's fuel tank is empty, residual gasoline vapors could ignite.

Never store the log splitter near fertilizer or any other corrosive material.

6. Store gasoline in a cool, dry place in a UL listed tightly sealed container.

Gasoline vapors can ignite if they collect inside an enclosure and explosion can result.

TROUBLESHOOTING

Problem	Cause	Remedy
Wedge movement is slow or erratic	1. Air in the hydraulic oil system 2. Debris lodged in beam guides 3. Low hydraulic oil	1. Purge air by extending and retracting the wedge several times until motion is smooth 2. Clear debris from beam 3. Check oil level and add as needed
Oil leak from cylinder	1. Faulty cylinder rod seal 2. Scored or bent cylinder rod 3. Loose hydraulic fitting 4. Faulty combination washer seal on cylinder hydraulic fitting	1. Contact customer service 2. Contact customer service 3. Tighten hydraulic fitting 4. Contact customer service
Oil leak from hose connection	Loose hose clamp or hydraulic fitting	Tighten hose clamp or hydraulic fitting
Wedge will not extend or retract	1. Faulty control valve 2. Faulty hydraulic pump 3. Low hydraulic oil	1. Contact customer service 2. Contact customer service 3. Check oil level and add as needed
Wedge does not auto-return	1. Low hydraulic oil 2. Faulty control valve	1. Check oil level and add as needed 2. Contact customer service
Excessive bouncing while towing	Underinflated	Inflate tires to proper pressure
Control valve handle does not return to neutral when released from forward position	1. Hydraulic oil too cold 2. Hydraulic oil too thick 3. Hydraulic oil contaminated 4. Faulty control valve	1. Warm up engine 2. Replace hydraulic fluid 3. Replace hydraulic fluid 4. Contact customer service
Engine will not start	1. Engine switch in OFF position 2. Fuel shut-off valve in OFF position 3. Fuel tank empty 4. Spark plug disconnected 5. Faulty spark plug 6. Choke lever in wrong position 7. Faulty engine	1. Move switch to ON position 2. Move valve to ON position 3. Fill fuel tank with fuel 4. Connect spark plug 5. Replace spark plug 6. Adjust choke lever position 7. Contact customer service

PARTS DIAGRAM

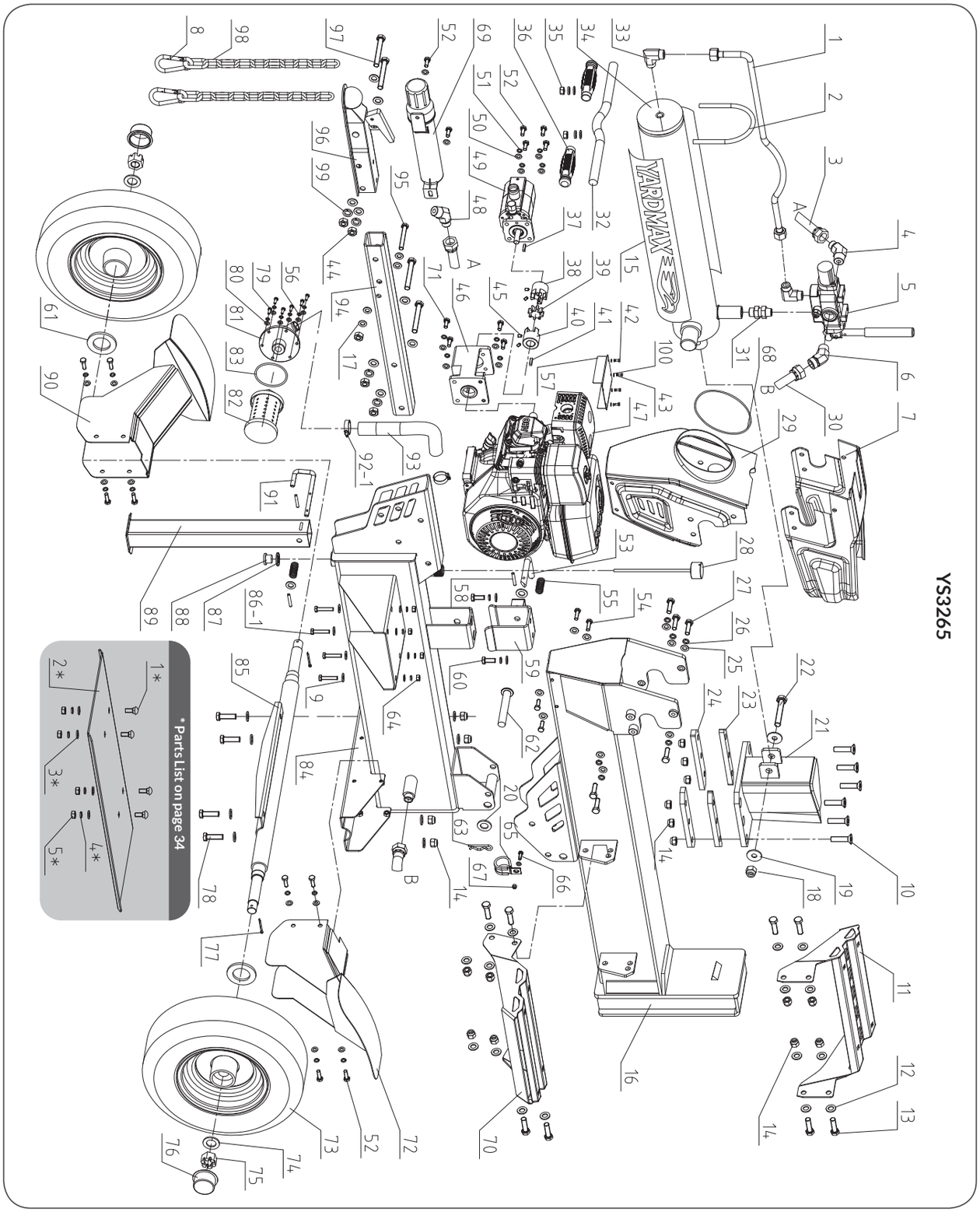

YS3265 PARTS LIST

No.	Description	Qty
1	Welded Hose	1
2	U hoop	1
3	High Pressure Supply Hose	1
4	135° Fitting 1	1
5	Control Valve	1
6	135° Fitting 2	1
7	Log Stripper Weldment	1
8	Quick Link	2
9	Big Washer 8	8
10	Hexagon Recessed Head Screw M12x55	6
11	Log Craddle-Left	1
12	Washer 12	32
13	Bolt M12x35	8
14	Lock Nut M12	18
15	Logo Decal on Cylinder	2
16	Beam Weldment	1
17	Washer10	4
18	Lock Nut M14	1
19	Washer 14	3
20	Big Washer 18	1
21	Wedge	1
22	Bolt 14x90	1
23	Guide Slide	2
24	Retainer Slide	2
25	Flat Washer 10	24
26	Spring Washer 10	8
27	Bolt M10x35	6
28	Dipstick	1
29	Trunnion Mount	1
30	Low Pressure Return Hose	1
31	Valve Straight Fitting 1/2"	1
32	Hydraulic Cylinder Handlebar	1
33	Right-Angle Fitting 1/2"	2
34	Cylinder	1
35	Nut M10	2
36	Handlebar Grip	2
37	Key 3x25	1

No.	Description	Qty
38	Gear Pump Connector Left	1
39	Elastic Spider Block	1
40	Gear Pump Connector Right	1
41	Key 3/16x30	1
42	Screw M4x8	4
43	Spring Washer 4	4
44	Nut M12	3
45	Screw M6x10	4
46	Pump Bracket	1
47	Engine	1
48	135° 1/2" Fitting	1
49	Gear Pump	1
50	Washer 8	24
51	Spring Washer 8	20
52	Bolt M8x20	14
53	Lock Latch	1
54	Bolt M8x10	4
55	Pressure Spring	2
56	Spring Washer 6	6
57	Cover of Pump Bracket	1
58	Pin 6x40	3
59	Beam Lock Bracket	1
60	Bolt M10x25	2
61	Anti-Dust Washer	2
62	Pin 18x135	1
63	Big Bridge Pin	1
64	Nut M8	4
65	Hose Clamp	1
66	Bolt 6x20	1
67	Lock Nut M6	1
68	Protective Strip	1
69	Manual Tube	1
70	Log Craddle-Right	1
71	Bolt 5/16	4
72	Fender-Right	1
73	Tire	2
74	Washer 22	2

No.	Description	Qty
75	Nut M22	2
76	Dust Cap	2
77	Cotter Pin 4x50	2
78	Bolt M12x30	4
79	Bolt M6x16	6
80	Washer 6	7
81	Flange of filter	1
82	Return Oil Filter	1
83	O-Ring D81x3.1	1
84	Tank Weldment	1
85	Wheel Axle	1
86-1	Bolt M8x40	4
87	Washer 20	1
88	Oil Plug	1
89	Support Leg	1
90	Fender-Left	1
91	U-shaped Lock Pin	1
92-1	Clamp 25-38	2
93	Suction Hose	1
94	Tow bar	1
95	Bolt M10x85	1
96	2" Ball Coupler Hitch	1
97	Bolt M12x80	4
98	Safety Chain	2
99	Spring Washer 12	4
100	Flat Washer 4	4

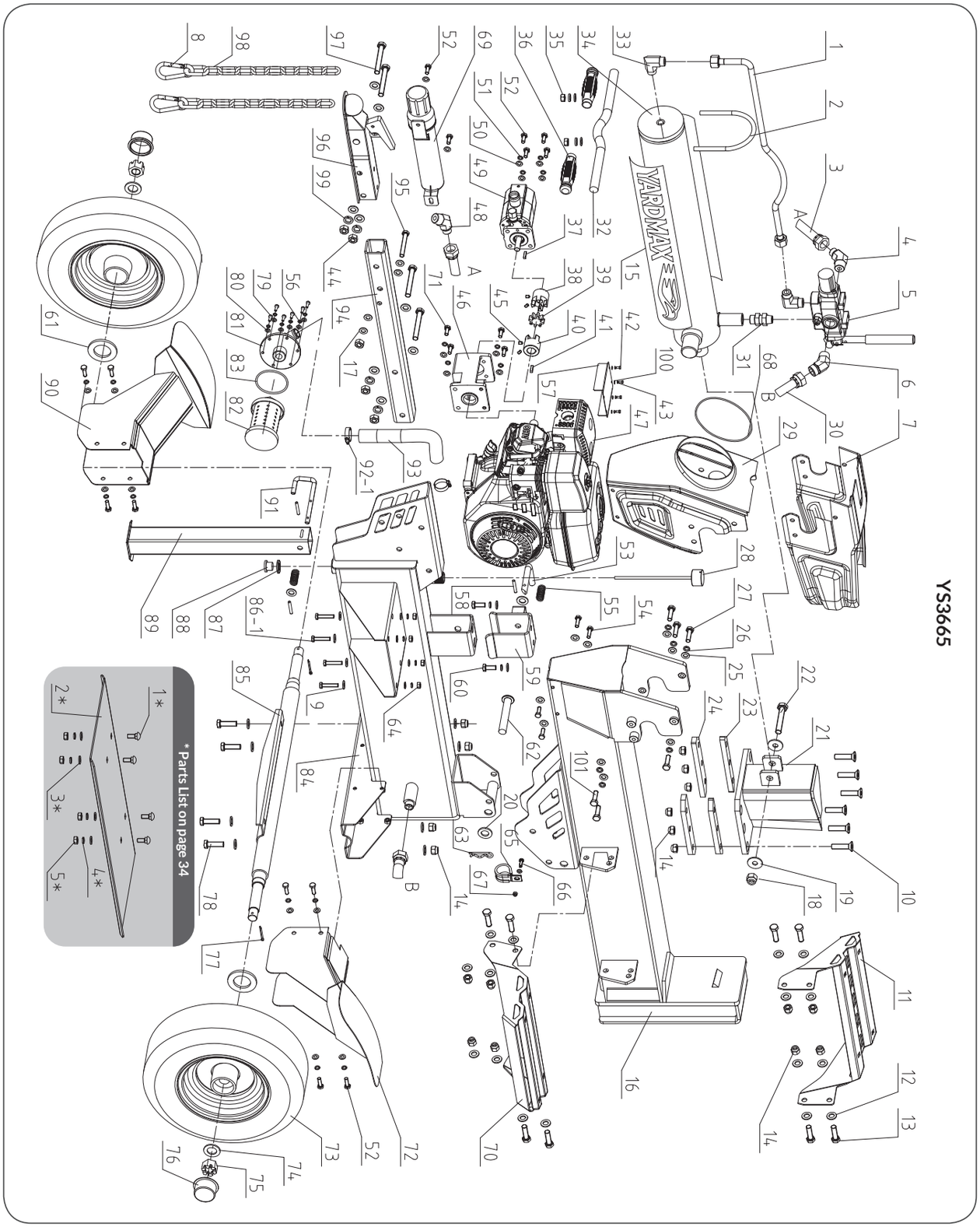
YS3665
YARDMAX
* Parts List on page 34

YS3665 PARTS LIST

No.	Description	Qty
1	Welded Hose	1
2	U hoop	1
3	High Pressure Supply Hose	1
4	135° Fitting 1	1
5	Control Valve	1
6	135° Fitting 2	1
7	Log Stripper Weldment	1
8	Quick Link	2
9	Big Washer 8	8
10	Hexagon Recessed Head Screw M12x55	6
11	Log Craddle-Left	1
12	Washer 12	32
13	Bolt M12x35	8
14	Lock Nut M12	18
15	Logo Decal on Cylinder	2
16	Beam Weldment	1
17	Washer10	4
18	Lock Nut M14	1
19	Washer 14	3
20	Big Washer 18	1
21	Wedge	1
22	Bolt 14x90	1
23	Guide Slide	2
24	Retainer Slide	2
25	Flat Washer 10	24
26	Spring Washer 10	8
27	Bolt M10x35	4
28	Dipstick	1
29	Trunnion Mount	1
30	Low Pressure Return Hose	1
31	Valve Straight Fitting 1/2"	1
32	Hydraulic Cylinder Handlebar	1
33	Right-Angle Fitting 1/2"	2
34	Cylinder	1
35	Nut M10	2
36	Handlebar Grip	2
37	Key 3x25	1

No.	Description	Qty
38	Gear Pump Connector Left	1
39	Elastic Spider Block	1
40	Gear Pump Connector Right	1
41	Key 3/16x30	1
42	Screw M4x8	4
43	Spring Washer 4	4
44	Nut M12	3
45	Screw M6x10	4
46	Pump Bracket	1
47	Engine	1
48	135° 1/2" Fitting	1
49	Gear Pump	1
50	Washer 8	24
51	Spring Washer 8	20
52	Bolt M8x20	14
53	Lock Latch	1
54	Bolt M8x10	4
55	Pressure Spring	2
56	Spring Washer 6	6
57	Cover of Pump Bracket	1
58	Pin 6x40	3
59	Beam Lock Bracket	1
60	Bolt M10x25	2
61	Anti-Dust Washer	2
62	Pin 18x135	1
63	Big Bridge Pin	1
64	Nut M8	4
65	Hose Clamp	1
66	Bolt 6x20	1
67	Lock Nut M6	1
68	Protective Strip	1
69	Manual Tube	1
70	Log Craddle-Right	1
71	Bolt 5/16	4
72	Fender-Right	1
73	Tire	2
74	Washer 22	2

No.	Description	Qty
75	Nut M22	2
76	Dust Cap	2
77	Cotter Pin 4x50	2
78	Bolt M12x30	4
79	Bolt M6x16	6
80	Washer 6	7
81	Flange of filter	1
82	Return Oil Filter	1
83	O-Ring D81x3.1	1
84	Tank Weldment	1
85	Wheel Axle	1
86-1	Bolt M8x40	4
87	Washer 20	1
88	Oil Plug	1
89	Support Leg	1
90	Fender-Left	1
91	U-shaped Lock Pin	1
92-1	Clamp 25-38	2
93	Suction Hose	1
94	Tow bar	1
95	Bolt M10x85	1
96	2" Ball Coupler Hitch	1
97	Bolt M12x80	4
98	Safety Chain	2
99	Spring Washer 12	4
100	Flat Washer 4	4
101	Bolt M10x20	2

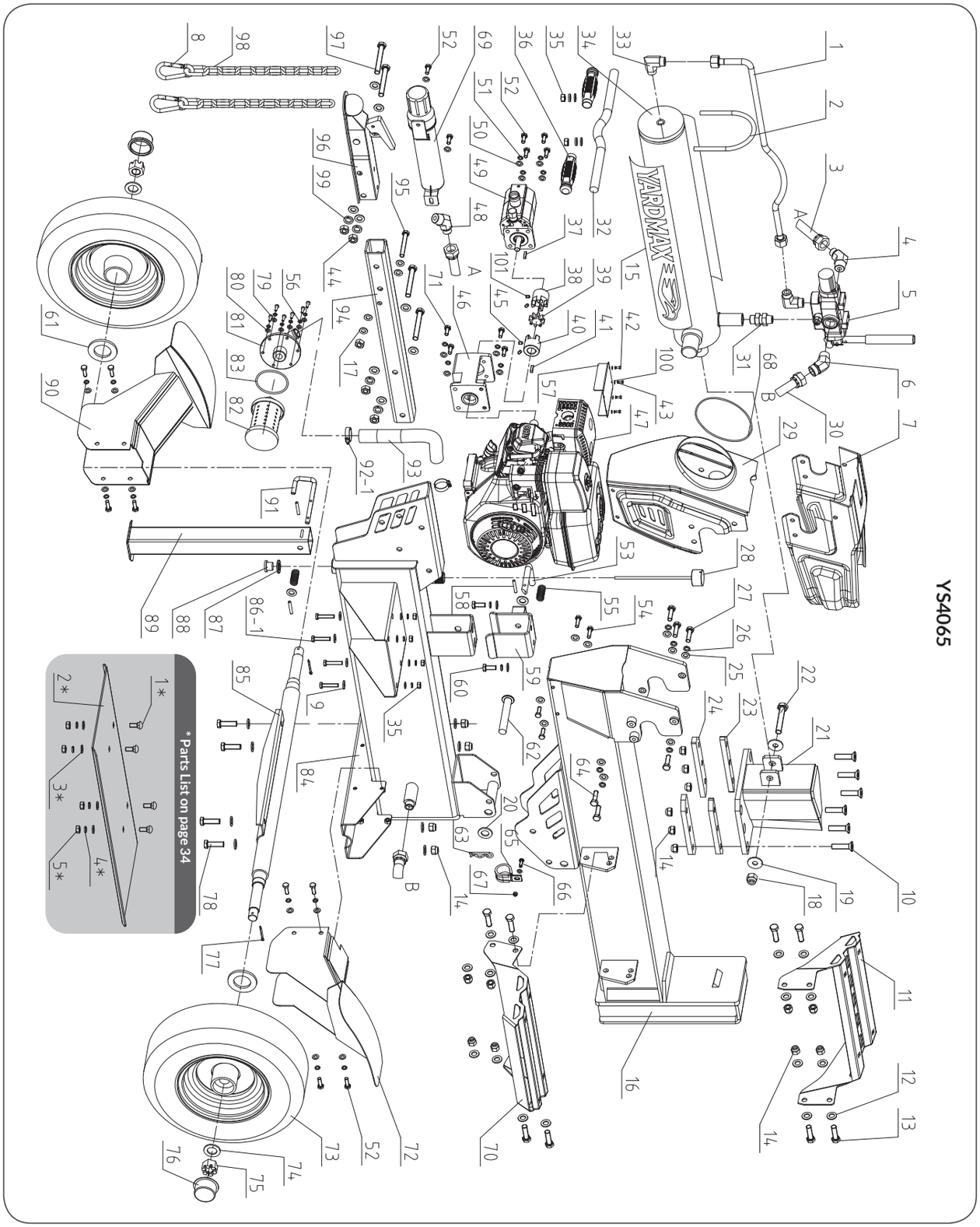
YS4065
YARDMAX
* Parts List on page 34

YS4065 PARTS LIST

No.	Description	Qty
1	Welded Hose	1
2	U hoop	1
3	High Pressure Supply Hose	1
4	135° Fitting 1	1
5	Control Valve	1
6	135° Fitting 2	1
7	Log Stripper Weldment	1
8	Quick Link	2
9	Big Washer 10	8
10	Hexagon Recessed Head Screw M12x55	6
11	Log Craddle-Left	1
12	Washer 12	32
13	Bolt M12x35	8
14	Lock Nut M12	18
15	Logo Decal on Cylinder	2
16	Beam Weldment	1
17	Washer10	4
18	Lock Nut M14	1
19	Washer 14	3
20	Big Washer 18	1
21	Wedge	1
22	Bolt 14x95	1
23	Guide Slide	2
24	Retainer Slide	2
25	Flat Washer 10	26
26	Spring Washer 10	10
27	Bolt M10x35	4
28	Dipstick	1
29	Trunnion Mount	1
30	Low Pressure Return Hose	1
31	Valve Straight Fitting 1/2"	1
32	Hydraulic Cylinder Handlebar	1
33	Right-Angle Fitting 1/2"	2
34	Cylinder	1
35	Nut M10	10
36	Handlebar Grip	2
37	Key 3x25	1

No.	Description	Qty
38	Gear Pump Connector Left	1
39	Elastic Spider Block	1
40	Gear Pump Connector Right	1
41	Key 1/4x50	1
42	Screw M5x10	4
43	Spring Washer 5	4
44	Nut M12	3
45	Screw M8x10	2
46	Pump Bracket	1
47	Engine	1
48	135° 1/2" Fitting	1
49	Gear Pump	1
50	Washer 8	20
51	Spring Washer 8	16
52	Bolt M8x20	14
53	Lock Latch	1
54	Bolt M8x10	4
55	Pressure Spring	2
56	Spring Washer 6	6
57	Cover of Pump Bracket	1
58	Pin 6x40	3
59	Beam Lock Bracket	1
60	Bolt M10x25	2
61	Anti-Dust Washer	2
62	Pin 18x135	1
63	Big Bridge Pin	1
64	Bolt M10x20	2
65	Hose Clamp	1
66	Bolt 6x20	1
67	Lock Nut M6	1
68	Protective Strip	1
69	Manual Tube	1
70	Log Craddle-Right	1
71	Bolt 5/16	4
72	Fender-Right	1
73	Tire	2
74	Washer 22	2

No.	Description	Qty
75	Nut M22	2
76	Dust Cap	2
77	Cotter Pin 4x50	2
78	Bolt M12x30	4
79	Bolt M6x16	6
80	Washer 6	6
81	Flange of filter	1
82	Return Oil Filter	1
83	O-Ring D81x3.1	1
84	Tank Weldment	1
85	Wheel Axle	1
86-1	Bolt M10x45	4
87	Washer 20	1
88	Oil Plug	1
89	Support Leg	1
90	Fender-Left	1
91	U-shaped Lock Pin	1
92-1	Clamp 25-38	2
93	Suction Hose	1
94	Tow bar	1
95	Bolt M10x85	1
96	2" Ball Coupler Hitch	1
97	Bolt M12x80	4
98	Safety Chain	2
99	Spring Washer 12	8
100	Flat Washer 5	4
101	Screw M6x10	2

OPTIONAL LOG TABLE

No.	Description	Qty
1*	Bolt M10x25	4
2*	Log Table	1
3*	Flat Washer 10	4
4*	Spring Washer 10	4
5*	Nut M10	4

Tame the Great Outdoors®

YARDMAX®

847-327-0566 or 844-YARDMAX | support@yardmax.com