UNDER SINK

iSpring RCC Series Reverse Osmosis Water Filtration System

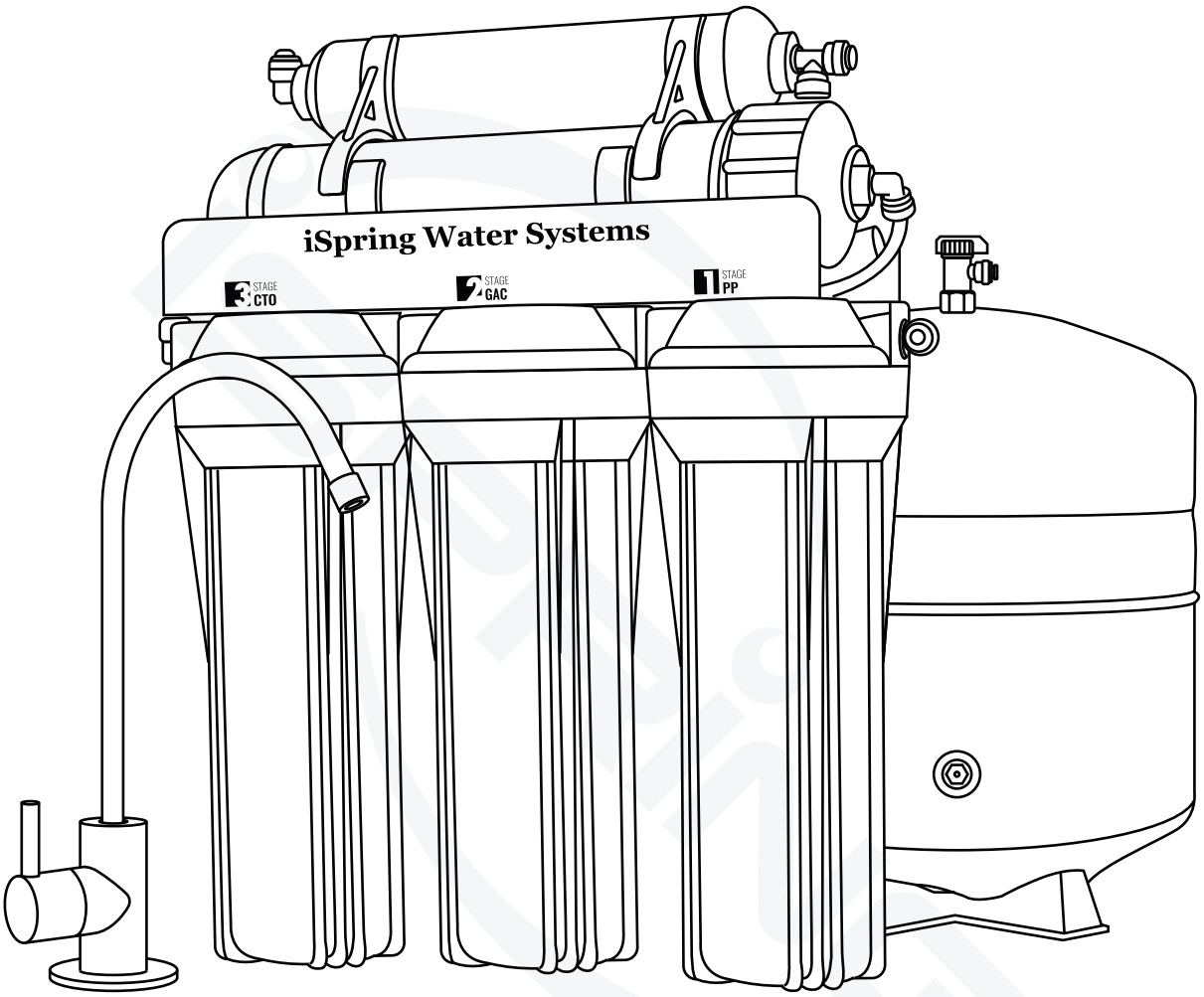

Installation Instructions & User Manual

Ver. 05/2025

iSpring Water Systems

Support & Warranty

Copyright ©2005-2025 ISPRING WATER SYSTEMS, LLC. All rights reserved.

We stand behind our products

Since 2005, iSpring has been committed to delivering safe and clean water solutions to families and businesses worldwide. We provide a wide range of residential and commercial water filtration systems designed to purify your water, ensuring that you and your family enjoy pure, healthy, and great-tasting water every day.

At iSpring, we strive to develop products to the highest standards and aim to make excellent drinking water accessible for all households. With affordable pricing, reliable quality, prompt delivery, and top-notch customer service, we hope to assist in bringing you great water for years to come.

Prior to Installation

Read this instruction manual carefully prior to installation.
Keep this manual readily available for future reference.

Table of Contents

User Information 04

Product Features 05

Component Identification 06

Installation 07

- Before you start the installation 07
- Step 1: Installing Feed Water Adapter (Model #AFW43) 08
- Step 2: Installing Drinking Water Faucet 08
- Step 3: Installing Drain Saddle (Model #ADS1K) 11
- Step 4: Installing the Vertical Filters: Stages 1, 2, and 3 11
- Step 5: Installing Tank Shut-off Valve (Model #ABV2K) 12
- Air Bladder Pressure Adjustment 12
- Step 6: Installing the Reverse Osmosis Membrane 12
- Step 7: Tubing Connection 13
- Step 8: Leak Stop Valve (Model #ALS1) Installation 14
- Step 9: Mounting the System (Optional) 15
- Step 10: System Startup (Model-specific Items are Marked with a *) 15

System Maintenance 16

Optional Add-on 20

Troubleshooting 20

Glossary and Terms to Know 22

Performance Data Sheet 25

User Information

The user must adhere to the installation specifications described in this Product Installation and Operation Manual (after this, referred to as the "instruction manual"). iSpring is not responsible for damage, loss, or injury resulting from neglect, improper maintenance, or unauthorized modification of products.

- This product is designed for residential use only. Contact iSpring customer service to inquire about usage in non-residential settings.
- This RO system is NOT designed for HOT water or extreme COLD weather. If the water or ambient temperature falls below 40°F, immediately turn off the in-line water supply and drain the remaining water. Within the range, the warmer the water, the faster the RO process.
- Please make sure to unplug the system and contact iSpring customer service for help if there is any problem caused by damage or failure of the power supply system. If the power adapter is damaged, trained professionals should replace it to ensure safety.
- If a leak occurs, turn off the in-line water supply by turning off the adapter. Then unplug the system and contact iSpring customer service.
- Use only authorized iSpring parts and filters. Using unauthorized or aftermarket components will void the product warranty.
- Unauthorized modification and disassembly are strictly prohibited and will void the warranty.
- It is recommended that users check external fittings and connections regularly to ensure all components are secure.
- Never touch the power cord connector when your hands are wet, as this may result in electric shock.
- This appliance is not intended for use by persons (including children) with reduced physical, sensory, or mental capabilities or lack of experience and knowledge unless they have been given supervision or instruction concerning its use by a person responsible for their safety. Children should be supervised to ensure they do not play with the appliance.
- This appliance can be used by children aged 8 years and above and persons with reduced physical, sensory, or mental capabilities or lack of experience and knowledge if they have been given safe supervision or instruction concerning using the appliance and understand the hazards involved. Children shall not play with the appliance. Children shall not conduct cleaning and user maintenance without supervision.
- Use the new tubing included in the installation package, and do not reuse any old tube set you may have.

Product Features

1 Water Treatment Process

5-Stage System:

Source Water → PP Filter → GAC Filter → CTO Filter → RO Membrane → Post Taste-polishing Activated Carbon → Filtered Water

6-Stage System:

Source Water → PP Filter → GAC Filter → CTO Filter → RO Membrane → Post Taste-polishing Activated Carbon → Remineralization Alkaline / UV / DI → Filtered Water

7-Stage System:

Source Water → PP Filter → GAC Filter → CTO Filter → RO Membrane → Post Taste-polishing Activated Carbon → Remineralization Alkaline → UV → Filtered Water

2 Filtration Lifespan

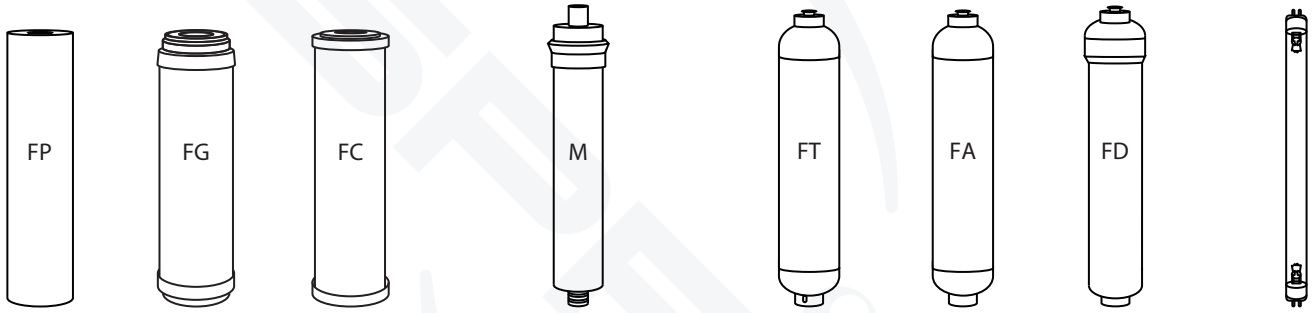

STAGE 1	STAGE 2	STAGE 3	STAGE 4	STAGE 5	STAGE 6	STAGE 6	STAGE 6 / 7
PP	GAC	CTO	RO Membrane	Post Carbon	Alkaline	DI	UV
#FP15	#FG15	#FC15	#MC1/#MC2/#MC7	#FT15	#FA15	#FD15	#UVB11
Up to 6 Months	Up to 1 Year	Up to 1 Year	Up to 3 Years	Up to 1 Year	Up to 1 Year	Up to 1 Year	Up to 1 Year

Note: The general filter cartridge replacement schedule is for reference only. Not all filters included in the same filter pack. Carefully choose the filter pack that suits your RO system. Filter replacement schedule may vary depending on the quality of your source water.

Note: Stage 6 and stage 7 only exist on specific models.

3 Operating Specifications

- For water pressure over 70 psi, a pressure regulator (Model #APR70) is required if there is high water pressure or water hammer occurs.
- For water pressure under 45 psi, a booster pump is needed to improve RO efficiency.

Parameters	
Inlet Water Pressure	45–70 psi
Inlet Water Temperature	40–100°F
pH	2.0–11.0

Component Identification

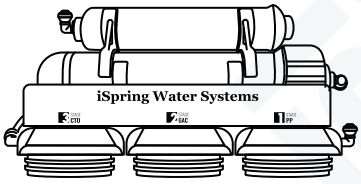

RO Machine Head
(membrane not yet installed)

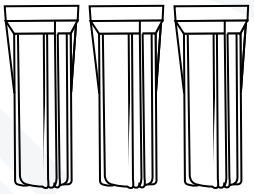

3 Pre-Filter
Housings



Pre-Filter
Cartridges



RO
Membrane

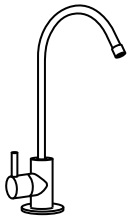

RO Faucet
Installation Kit

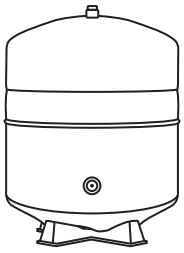

Storage Tank
(Model #T32M)

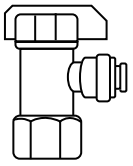

Tank Valve
(Model #ABV2K)

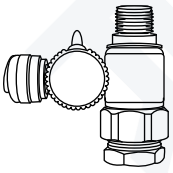

Feed Water Adapter
(Model #AFW43)

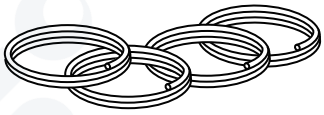

4-color Tubing
Set



Drain Saddle 1/4"
(Model #ADS1K)

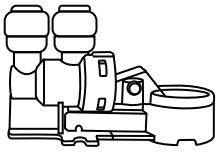

Leak Stop Valve
(Model #ALS1)

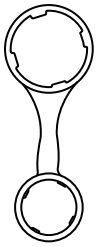

Housing Wrench
(Model #AWR2)

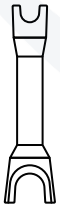

Quick Connect
Removal Tool
(Model #AQR23)

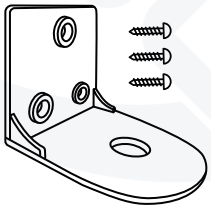

Faucet
Bracket

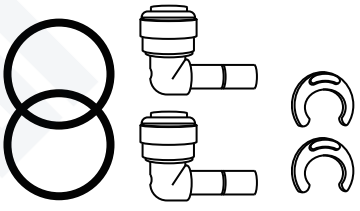

Spare Parts (O-rings,
Quick-Connect Fittings,
Locking C-Clips)

Note: If your system is a 6-stage or 7-stage with an Alkaline, DI, or UV filter, they are already pre-installed on the machine head.

Installation

Before you start the installation

- We recommend watching our video ***"iSpring RCC Series RO System DIY Installation | Step by Step | Latest Edition"*** on YouTube for your reference.
- Choose a suitable location for the system, which must be on a flat surface.
- Must ensure this system is installed on an INDOOR cold-water supply ONLY.
- Keep this system away from extreme hot/cold weather and direct sunlight. Avoid hitting, dropping, or dragging, as it may cause cracks and leaks.
- Check the component identification page to confirm that all accessories are included in the package. If any components are missing, contact iSpring customer service.

Required Tools:

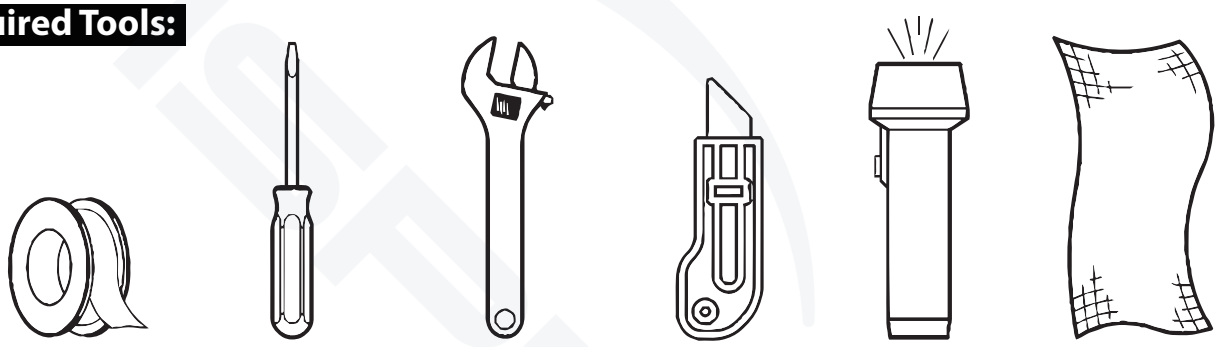

Plumber's Tape | Screw Driver | Spanner Wrench | Utility Knife | Flash Light | Towels

Additional Tools:

- Prepare a multi-speed drill with two bits: 1/4" (for drilling on PVC drainpipe) and 3/4" or 1" hollow diamond (for drilling on the countertop for drinking faucet if needed).
- Prepare a 5/8", 9/16" open-end wrench or adjustable wrench and pliers.

Quick-Connect Fitting Instruction:

HOW TO CONNECT

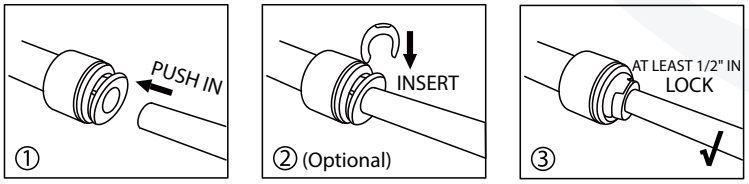

HOW TO DISCONNECT

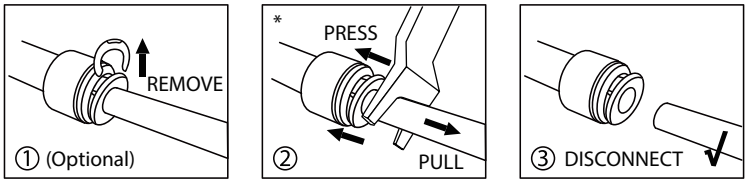

We recommend watching our video ***"How to Connect and Disconnect Quick Connect Fittings | DIY Installation"*** on YouTube for your reference.

Cut the tubing end evenly with a utility knife or scissors. Insert the tubing into the quick-connect fitting for at least 1/2". Twist the tube slightly and apply pressure to create a seal.

* The quick-connect removal tool can help to disconnect more easily. The tool should fit snugly around the tubing.

Step 1: Installing Feed Water Adapter (Model #AFW43)

We recommend watching our video ***"How to Install a Feed Water Adapter for Reverse Osmosis (RO) and Other Applications | iSpring AFW43"*** on YouTube for your reference.

Step 1. a. Turn off the cold water shut-off valve under the sink and open the kitchen faucet to release pressure. Grab a towel or bucket to catch any water drips. Disconnect the kitchen faucet connector pipe from the cold water shut-off valve.

Step 1. b. Install the feed water adapter onto the cold water shut-off valve and tighten it using a wrench or pliers. Ensure the O-ring is seated inside the adaptor.

Step 1. c. Reinstall the kitchen faucet connector pipe onto the male end of the feed water adapter. Turn the handle of the feed water adapter to the perpendicular OFF position. Slowly turn on the cold water shut-off valve to ensure a proper seal.

Step 1. d. Connect the 1/4" RED tubing to the feed water adapter.

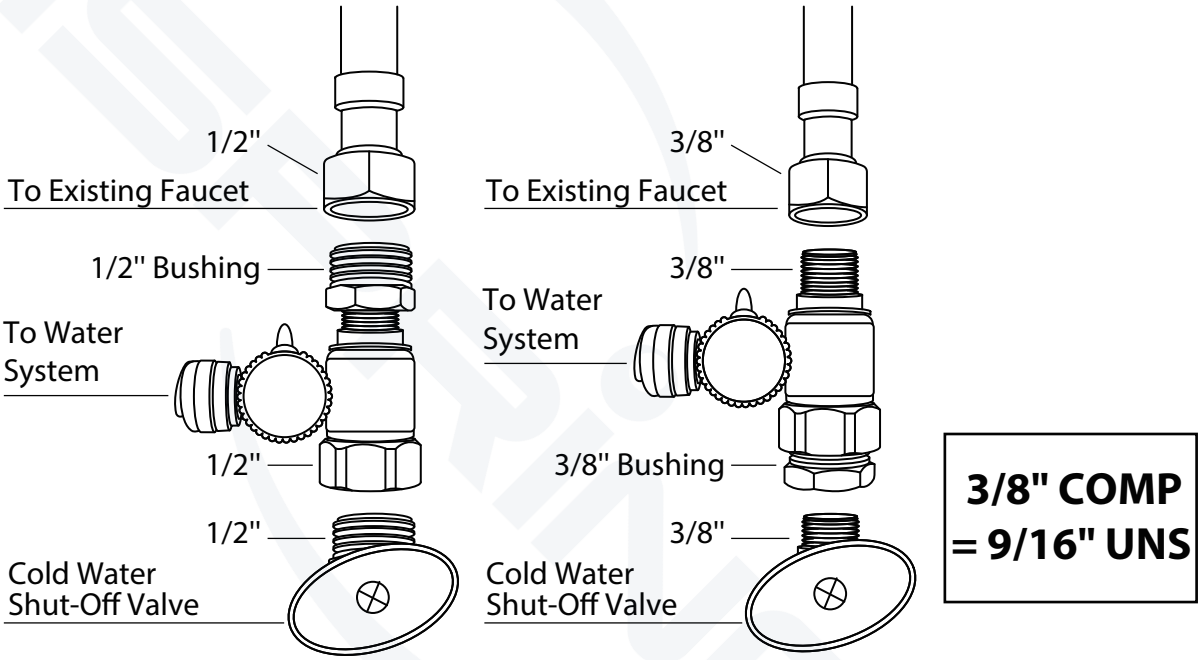

The included bushing can be threaded on either side of the AFW43 to fit the 3/8" COMP and 1/2" NPT configuration.

Step 2: Installing Drinking Water Faucet

Step 2. a. This drinking faucet installation kit includes a top-mount kit, a bottom-mount kit, and a faucet bracket. If your kitchen sink does not have a faucet hole for the drinking faucet, you can either drill one (Refer to ***How to Drill a Hole on Sink or Countertop*** below) or use the enclosed Faucet Bracket (Refer to ***Option 3: Faucet Bracket*** below). Choose a suitable location on the sink or countertop and install the drinking faucet on a flat surface, as shown in the image below.

Option 1: Bottom-Mount Kit

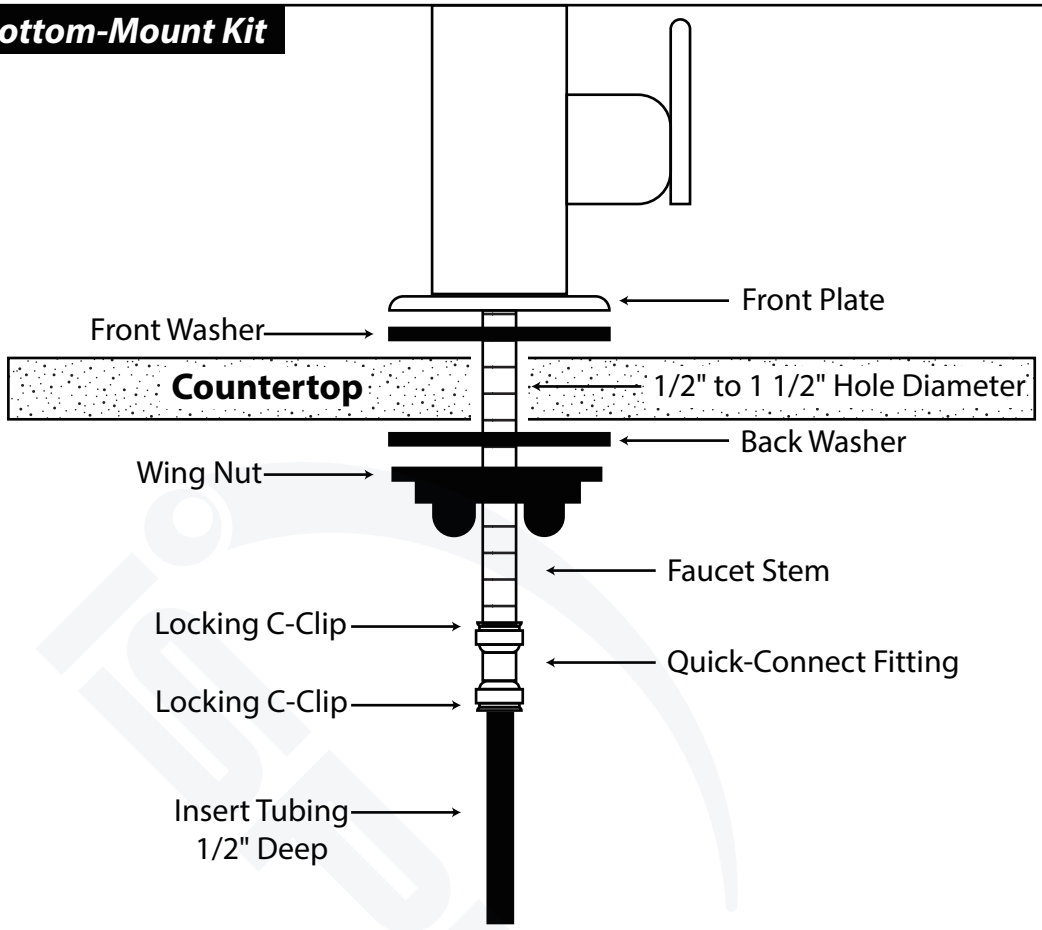

Option 2: Top-Mount Kit

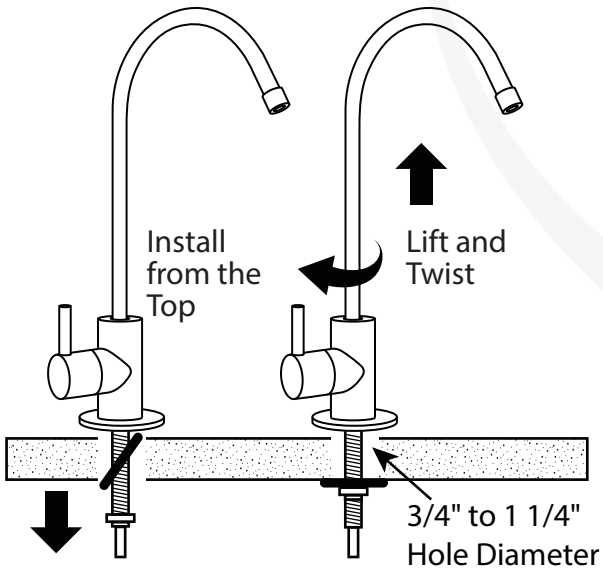

Option 3: Faucet Bracket

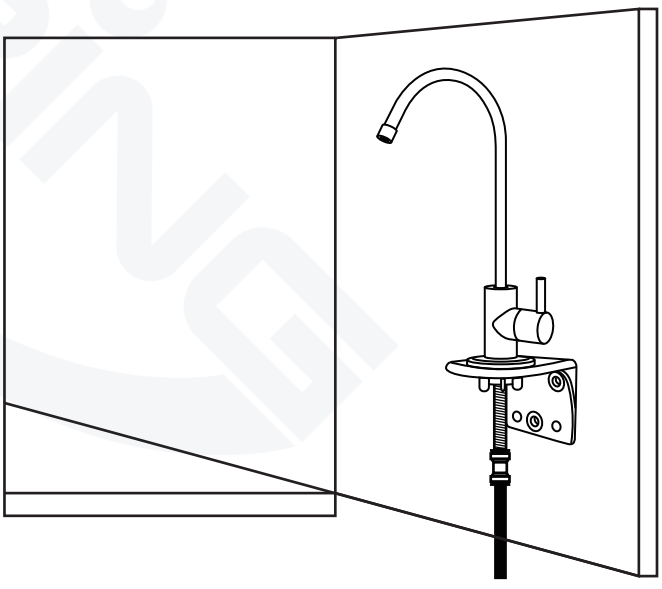

Step 2. b. The bottom-mount kit is designed for a 1/2" to 1-1/2" faucet hole, and the top-mount kit is designed for a 3/4" to 1-1/4" faucet hole. If there is no pre-drilled faucet hole on your counter, you must drill one to choose option 1 or 2.

How to Drill a Hole in Sink or Countertop

1. We recommend watching our video ***"How to Drill a Hole in a Countertop | Under Sink Water Filter & Reverse Osmosis Installation"*** and ***"Drilling Granite Countertop for Under-Sink Filters: A DIY Guide"*** on YouTube for your reference.
2. Use a diamond core bit of the correct size for granite and a titanium drill bit for steel.
3. Punch an indent before drilling to help guide the bit. Do not hammer drill on natural stone, glass, or ceramic materials.
4. Set the drill speed to the lowest and press the bit vertically to the countertop until it breaks through the surface. You may secure the bit by drilling through a piece of wood firmly pressed on the surface. Be careful when drilling on a porcelain sink, as it can easily chip.
5. Use coolant to disperse heat: water for granite and oil for steel. Use a water cup to hold the coolant inside and prevent the drill bit from slipping.
6. Once you break through the smooth surface, swirl the drill slightly to apply pressure evenly. Drilling one inch can take 20 to 40 minutes.

Step 2. c. Option 1: Bottom-Mount Kit

We recommend watching our video ***"How to Install Drinking Water Faucet & Drill Countertop Hole | DIY Guide"*** on YouTube for your reference. Slip the front plate on the faucet stem, followed by the front rubber washer. Insert the faucet stem into the hole on the countertop. Under the sink, slip on the back rubber washer and tighten the nut with the plastic wing.

Option 2: Top-Mount Kit

We recommend watching our video ***"How to install a drinking water faucet WITHOUT reaching under sink | iSpring AIG1 Installation Kit"*** on YouTube for your reference. Insert the plate with the rubber side up to the faucet stem. Install the metal nut on the faucet stem below the plate. It will keep the plate from falling. Lift and tilt the plate. Insert the faucet stem and the kit into the faucet hole while tilting the plate. Let go of the plate. It will drop and latch onto the metal nut via the triangular grooves on both sides. Thereby, it will change from the tilted position to the horizontal position. Lift the faucet body to secure the plate and nut. While lifting, tighten the faucet by turning it clockwise.

Option 3: Faucet Bracket

We recommend watching our video ***"How to Install a RO Faucet Bracket | DIY Installation"*** on YouTube for your reference. Mount the bracket to the sidewall of the cabinet. Insert the faucet stem into the bracket's hole. Slip on the back rubber washer. Tighten the nut with the plastic wing.

Step 2. d. Slide the quick-connect fitting into the faucet stem, ensure it sits securely on the base, and then lock it in place by sliding the blue locking C-clip under the collet.

Step 2. e. Insert the BLUE tubing about 1/2" into the quick-connect fitting and secure it with a locking C-clip.

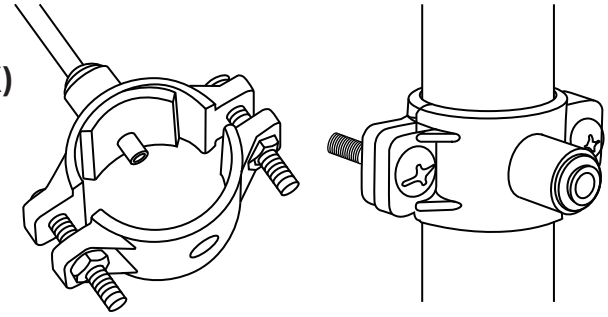

Step 3: Installing Drain Saddle (Model #ADS1K)

We recommend watching our video ***"How to Install iSpring Drain Saddle (ADS1K) for Reverse Osmosis (RO) System | DIY Installation"*** on YouTube for your reference.

Step 3. a. Choose an appropriate location on the drainpipe before the P-trap to install the drain saddle and tubing. Installing the drain saddle before the P-trap is important to avoid potential microorganism growth.

Step 3. b. Drill a 1 /4" hole in the drainpipe and paste the black sticky pad around the hole.

Step 3. c. Cut the BLACK tubing end to make a 45° angle. Insert the tubing into the 1/4" hole in the drainpipe, install the back plate, and tighten the two screws with hex nuts while the tubing remains in the hole.

Step 3. d. Insert the locking C-clip. Pull the tubing lightly to ensure it is secure.

Step 4: Installing the Vertical Filters: Stages 1, 2, and 3

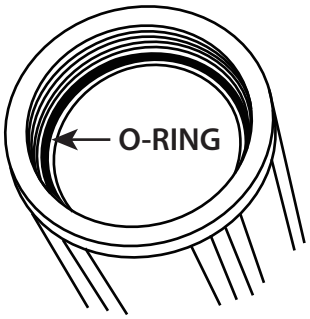

Step 4. a. Ensure that the O-ring is seated inside the groove at the top of the filter housing. Food-grade silicone grease may help the O-ring stay in place and seal better.

Step 4. b. The filter cartridges are covered in shrink wrap. Read the direction sign on the sticker before removing the wrap.

Step 4. c. When placing the filter cartridge into its housing, ensure it is centered. The bottom of the housing should match the dent on the filter.

Step 4. d. Screw the housing with filters attached to the housing caps (the caps are pre-assembled on the machine head). The cap should also match the dent on the filter cartridge. Then, twist the housing counterclockwise and use a housing wrench to tighten it up for about 1/4 – 1/2 turn. **Do not overtighten, as this can cause leaks and make it difficult to remove the housing when replacing filters.**

Note: The second stage GAC filter is the only filter that must go in a specific direction. Make sure that the end with the rubber washer faces up and attaches to the housing cap.

Step 5: Installing Tank Shut-off Valve (Model #ABV2K)

Check the tank's pre-pressurization status and ensure it is within the 7–10 psi before operation.

Step 5. a. Add 10–15 wraps of plumber's tape clockwise (when looking from above) onto the metal thread at the top of the tank.

Step 5. b. Screw the ABV2K onto the tank and tighten it by hand. Do not over-tighten.

Step 5. c. Connect the YELLOW tubing to the quick-connect fitting on the ABV2K.

Air Bladder Pressure Adjustment:

All the tanks have air bladder pressure adjustments to support the water flowing in and out. If water pressure is insufficient, adjust the internal pressure of the tank's air bladder to the recommended range by following these steps:

- Unscrew the air valve cap on the tank.
- Use an air pressure gauge (such as a tire pressure gauge) to evaluate the pressure of the air bladder in the tank.
- If air bladder pressure is below 7 psi, recharge the air bladder with a regular air pump.
- Screw back the air valve cap tightly.

Step 6: Installing the RO Membrane

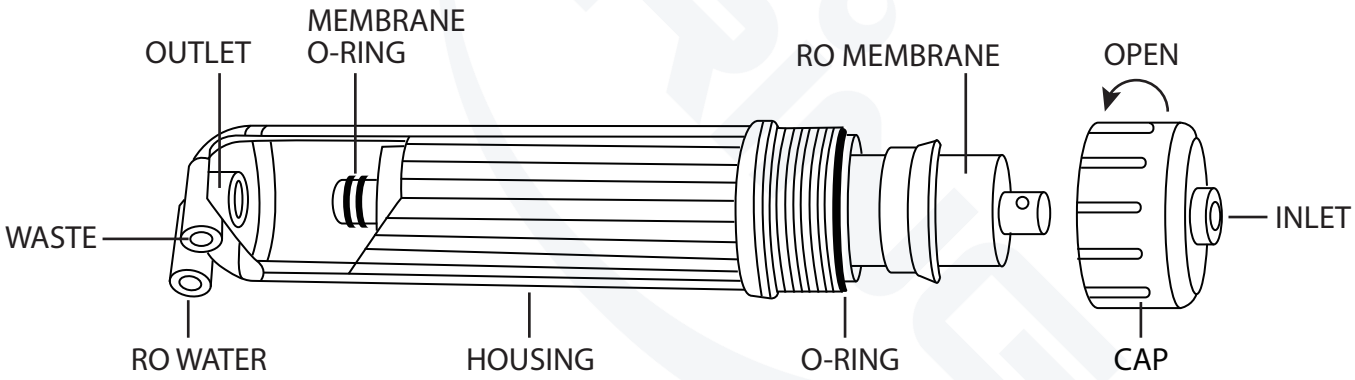

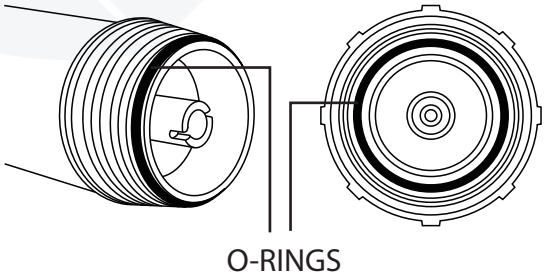

Step 6. a. Disconnect the tubing from the quick-connect fitting connection on the membrane cap.

Step 6. b. Open the membrane housing cap. Slip a thick rubber band on the housing body to get a better grip.

Step 6. c. Find the end of the RO membrane, cut open the end of the sealed bag, hold on to the end of the RO membrane to avoid contamination, and firmly insert it into the housing until the end without O-rings is entirely inside the housing. See the figure above for reference.

Step 6. d. Before twisting the housing cap back on, ensure the O-ring is evenly seated in the membrane housing.

Step 6. e. Tighten the cap by hand, then use a housing wrench to turn it an additional 1/4 to 1/2 turn, but do not over-tighten. Do not reconnect the tubing to the inlet on the cap at this point (do it during the system startup).

Step 7: Tubing Connection

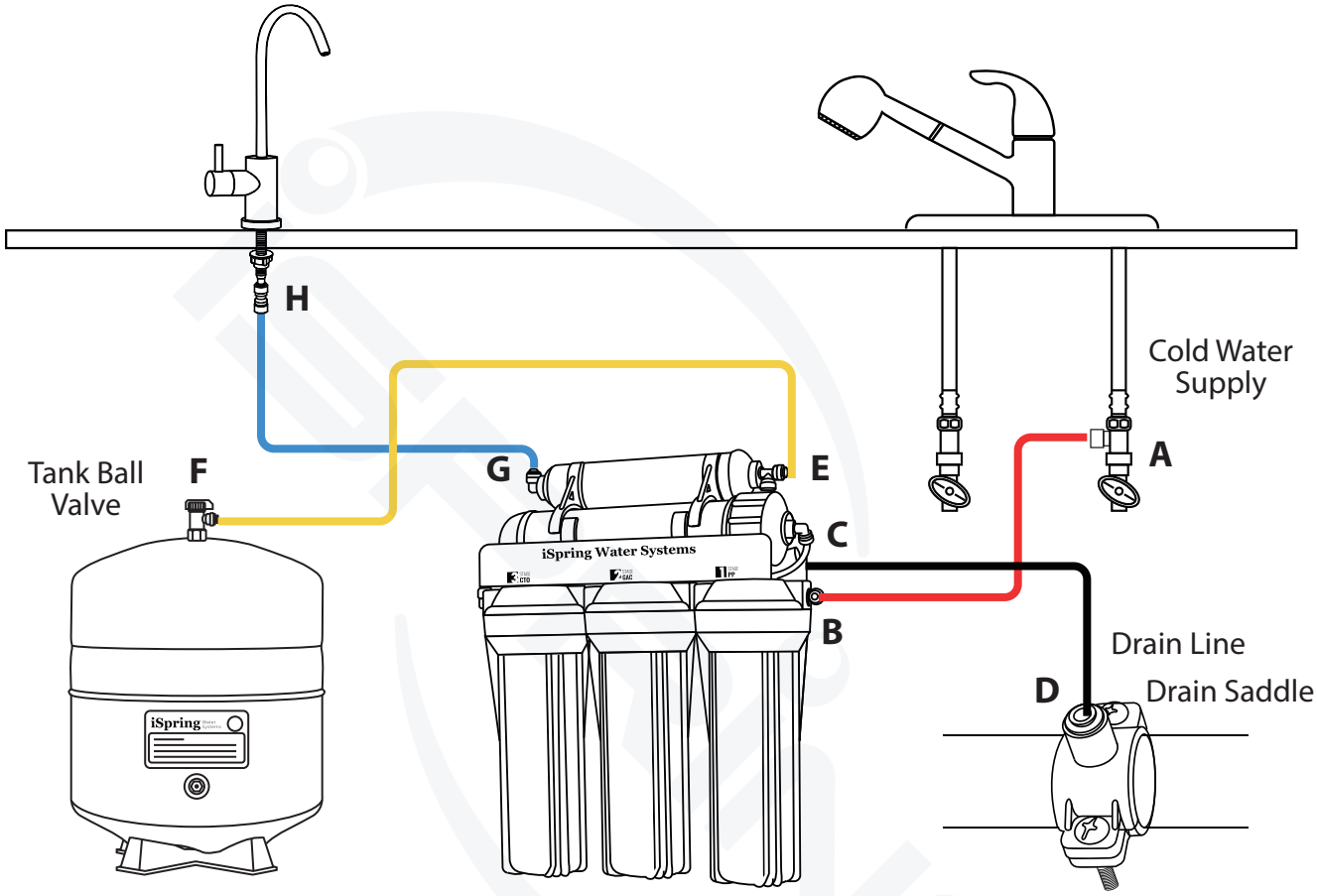

RED Tubing: Connect cold water supply from the feed water adapter (Point A) to the inlet quick-connect elbow fitting on the 1st stage water (Point B)

BLACK Tubing: Connect wastewater from the flow restrictor (Point C) to the drain saddle/ drainpipe (Point D)

YELLOW Tubing: Install the quick-connect T-fitting to the 5th stage post carbon filter (Point E) and then connect it to the storage tank valve (Point F)

BLUE Tubing: Connect the 5th stage post carbon filter (Point G) and the drinking faucet (Point H)

Note: For models with AK/DI/UV filters, the BLUE tubing should connect the output of the final stage to the drinking faucet (Point H).

Note: Leave enough tubing to be sure you can move the system and replace filters when needed. You may adjust the connection sequence following the instructions and reorganize the tubing.

Step 8: Leak Stop Valve (Model #ALS1) Installation

The leak stop valve is a reusable mechanical leakage protector. It will shut down the feed water whenever a water leakage is detected.

Step 8. a. Make sure the end of the tubing is cut square before connecting it to the fitting.
Step 8. b. Follow the water flow direction indicated on the leak stop valve to connect it to the water inlet pipeline.
Step 8. c. Tape the bottom of the leak stop valve against the floor.

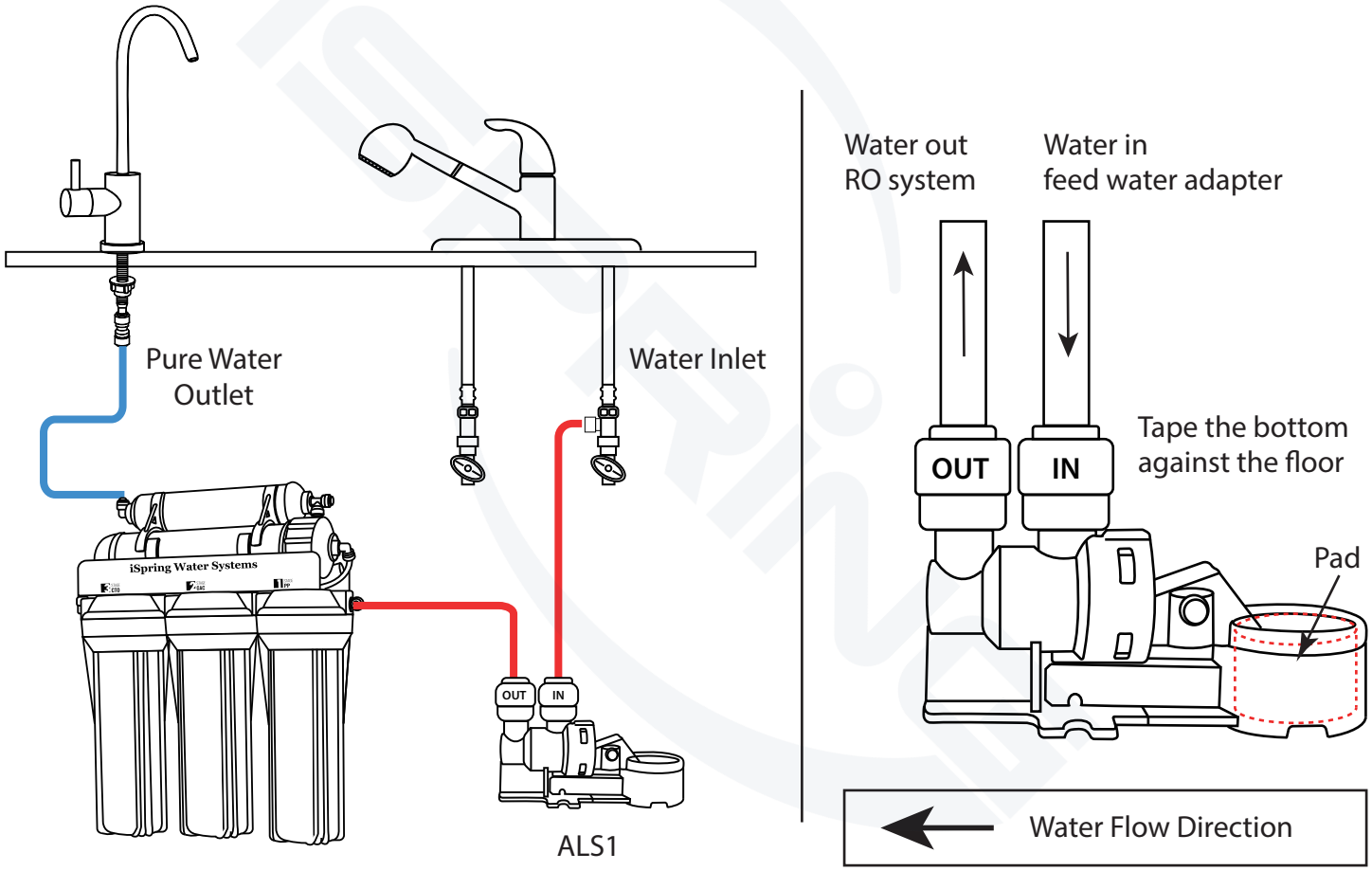

Note: Pad is for ONE TIME USE only.
In case of any leak incidence and the pad is expanded, please shut off inlet water supply completely, fix the leak, and replace the expanded pad before turning the water supply back on.

Step 9: Mounting the System (Optional)

If you plan to mount/hang the system, we recommend including support beneath three housings. Supports under the housings will remove water weight from the housing threads and ensure that the filter thread strength does not decay over the years.

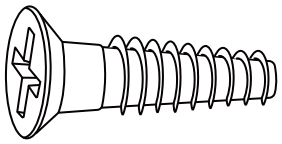

- Mounting the system is **not required**. The system does not need to be mounted to function.
- Please note that if the system is to be mounted, we recommend using two 10 x 1-1/4 Phillips Flat Wood Screws (not included) to make it easier to replace filters.
- **Optional Mounting Kit:** iSpring offers a dedicated mounting kit (Model #ASKRCC) for secure installation. This kit provides additional support and helps maintain system stability over time. If you prefer a mounting solution, consider using the iSpring Mounting Kit (sold separately). Refer to the installation guide included with the kit for proper setup.

Step 10: System Startup (Model-specific Items are Marked with a *)

Note: If your model has a UV stage, wait to plug in the UV power until you have performed a manual flushing of the system.

Step 10. a. Straighten the tubing. Turn off the tank shut-off valve (Model #ABV2K). Place a towel under the system to catch any water leaks.

Step 10. b. Disconnect the RO membrane inlet tubing on the housing cap. Open the feed water adapter valve (Model #AFW43) and cold water shut-off valve and flush the first three stages into a bucket until the water turns clear.

Step 10. c. Once the water is clear, turn off the AFW43 and reconnect the tubing to the RO membrane housing cap. **Flush the system whenever the first three stages of filters are replaced.**

Step 10. d. Open the drinking faucet. Slowly open the AFW43 and **check for any leaks.**

Step 10. e. Water will start slowly trickling from the drinking faucet within 5 minutes. Let the faucet trickle for at least 30 minutes to flush out the entire system, including the tank. The water may appear black initially due to loose carbon from the new carbon filters. It will eventually turn clear, apart from many tiny air bubbles leaving the system.

Step 10. f. Turn off the drinking faucet. Open the ABV2K. Wait for the tank to fill up completely. This process will take 1 to 2 hours depending on your water temperature (40°F –100°F, faster when warmer) and source water TDS (faster when lower).

Step 10. g. After the tank is filled, open the drinking faucet to drain the tank completely. **Do not use the first tank of water.** Let it drain into the sink until the stream turns to a trickle. This means the tank empties, and you can close the drinking faucet to let it begin filling again.

Step 10. h. * **If your system has a UV light**, plug in the UV power and check to ensure the light turns on when water flows through it. The light has a flow sensor switch that detects water flow and only turns the light on when needed. If the light does not turn on when water flows through, check if your power outlet is on, especially when the power is plugged into the same outlet as another appliance. Typically, a power outlet with a garbage disposal only has power when the disposal switch is turned on.

Step 10. i. The water's TDS should be evaluated periodically to verify that the system performs properly.

Step 10. j. Check for leaks daily for the first two weeks after installation to ensure the system functions correctly. Install the flood alarm (optional, Model #WD01) for additional peace of mind and protection.

RO Membrane MC7 Performance & Compliance:

- Efficiency rating is verified by testing per NSF/ANSI 58, Section 6.7.
- Efficiency rating means the percentage of the system's influent water available to the user as RO-treated water under operating conditions that approximate typical daily usage. System installation must comply with state and local laws.
- This RO system contains a replaceable treatment component, critical for effectively reducing TDS, and that product water shall be tested periodically to verify that the system is performing properly.
- RCC7 Series conforms to NSF/ANSI 58 for the specific performance claims as verified and substantiated by test data.
- Do not use with water that is microbiologically unsafe or of unknown quality without adequate disinfection before or after the system.
- This reverse osmosis system contains a replaceable component critical to the system's efficiency. Replacement of the reverse osmosis component should be with one of identical specifications, as defined by the manufacturer, to ensure the same efficiency and contaminant reduction performance.

System Maintenance

All iSpring RO systems are easy to use and require low maintenance if users follow the instructions. Change filters based on the time listed to keep the system well-maintained for years. Below are our filter pack model numbers. All filter packs can be found at ispringfilter.com.

System Model	1-Year Filter Pack	2-Year Filter Pack	3-Year Filter Pack
RCC7*, RCC7P, RCC7-BN*, RCC7-BLK*	F7-GAC	F15-75	F22-75
RCC7AK*, RCC7P-AK, RCC7AK-BN*, RCC7AK-BLK*	F9K	F19K75	F28K75
RCC7AK-UV*, RCC7AK-UVBN*, RCC7AK-UVBLK*	F10KU	F21KU75	F31KU75
RCC7D	F9D	F19D75	F28D75
RCC7U*, RCC7UV*	F8U	F17U75	F25U75
RCC100P	F7-GAC	F15-100	F22-100
RCC1UP	F8U	F17U100	F25U100
RCC1UP-AK	F10KU	F21KU100	F31KU100
RCC2	F7-GAC	F15-200	F22-200
RCC2AK	F9K	F19K200	F28K200
RCC2AK-UV	F10KU	F21KU200	F31KU200

* RCC7-BN / RCC7-BLK / RCC7AK-BN / RCC7AK-BLK / RCC7AK-UVBN / RCC7AK-UVBLK / RCC7UV Tested and Certified by NSF International against NSF/ANSI Standard 58 for reduction of Asbestos, Barium, Cadmium, Chromium (Trivalent), Copper, Fluoride, Lead, Selenium, TDS.

RO System Filter Replacement Options										
Filters & Packs Model	**FP15**	**FG15**	**FC15**	**FT15**	**MC1**	**MC2**	**MC7**	**FD15**	**FA15**	**UVB11**
F3	1	1	1	-	-	-	-	-	-	-
F4	1	1	1	1	-	-	-	-	-	-
F4AK	1	1	1	-	-	-	-	-	1	-
F4-FD15	1	1	1	1	-	-	-	1	-	-
F5-75	1	1	1	1	-	-	1	-	-	-
F5-100	1	1	1	1	1	-	-	-	-	-
F5-200	1	1	1	1	-	1	-	-	-	-
F6K75	1	1	1	1	-	-	1	-	1	-
F7-GAC	2	2	2	1	-	-	-	-	-	-
F8U	2	2	2	1	-	-	-	-	-	1
F9D	2	2	2	1	-	-	-	2	-	-
F9K	2	2	2	1	-	-	-	-	2	-
F10KU	2	2	2	1	-	-	-	-	2	1
F15-75	4	4	4	2	-	-	1	-	-	-
F15-100	4	4	4	2	1	-	-	-	-	-
F15-200	4	4	4	2	-	1	-	-	-	-
F17U75	4	4	4	2	-	-	1	-	-	2
F17U100	4	4	4	2	1	-	-	-	-	2
F19D75	4	4	4	2	-	-	1	4	-	-
F19K75	4	4	4	2	-	-	1	-	4	-
F19K200	4	4	4	2	-	1	-	-	4	-
F21KU75	4	4	4	2	-	-	1	-	4	2
F21KU100	4	4	4	2	1	-	-	-	4	2
F21KU200	4	4	4	2	-	1	-	-	4	2
F22-75	6	6	6	3	-	-	1	-	-	-
F22-100	6	6	6	3	1	-	-	-	-	-
F22-200	6	6	6	3	-	1	-	-	-	-
F25U75	6	6	6	3	-	-	1	-	-	3
F25U100	6	6	6	3	1	-	-	-	-	3
F28D75	6	6	6	3	-	-	1	6	-	-
F28K75	6	6	6	3	-	-	1	-	6	-
F28K200	6	6	6	3	-	1	-	-	6	-
F31KU75	6	6	6	3	-	-	1	-	6	3
F31KU100	6	6	6	3	1	-	-	-	6	3
F31KU200	6	6	6	3	-	1	-	-	6	3

When to change the filters?

We suggest replacing the filters when they reach their recommended replacement cycle. However, the actual lifespan of filters may vary depending on the source water quality and daily usage. If you notice a remarkable decrease in the water flow or detect an unpleasant smell, taste, or odor, and your filter is close to the end of its replacement lifespan, changing your filters would help.

How do I change the filters?

Carefully follow the instructions that come with the filter package.

O-rings: Replace every 3 years or if any leakage occur.

The package includes spare O-rings for the pre-filter and membrane housings. Please keep them with this manual.

Tank Maintenance

Emptying and refilling the tank at least once a month is recommended to keep the water inside the tank fresh and prevent it from sitting for an extended period.

What should I do with the system when I am not home?

When leaving for an extended time, you will want to turn off the water supply to the system and empty the tank. To do this, close the knob on the feed water adapter, and open the drinking faucet until it stops running. This will signify that the tank is empty. **If you expect to be gone for over a week, you will want to remove the RO membrane, wrap it with plastic wrap, and store it in a Ziploc bag in the refrigerator.**
If the system has not been used for over a week and filters are not sealed and stored, filters will sit in stagnant water, allowing bacteria to accumulate. We recommend replacing the filters under this circumstance.

Leak Stop Valve Pads (ALS1P3) Replacement

We recommend watching our video ***"Absorb Pad Replacement of iSpring Leak Stop Valve | Easy DIY | Step by Step"*** on YouTube for your reference.

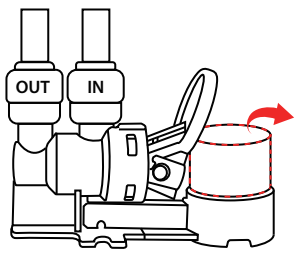

❶ Shutoff the inlet water supply. Lift the pad cover, remove the expanded pad.

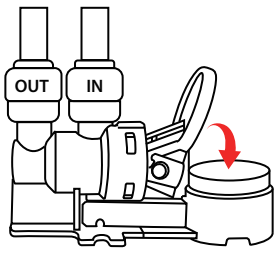

❷ Drop in the new pad.

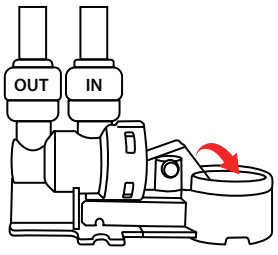

❸ Close the pad cover, the replacement is now completed.

Optional Add-on

Automatic Filter Replacement Reminder (Model #AFLT4)

Tailored for the iSpring RCC series, the AFLT4 reminder sends out alerts when it is time to replace each filter and helps keep the filtration system at its peak performance.

Water Filtration System Slide-Out Mounting Kit (Model #ASKRCC)

Sliding rail works seamlessly with the RCC series and enables a easier filter replacement experience.

TDS Test Meter (Model #TDS2 or TDS3)

Use a TDS test meter to check tap water quality or to determine your filter replacement status.

Tubing (Model #T14B or T14W)

1/4'' food-grade tubing in a 50' roll is good for tubing replacement and extension.

iSpring Tanks

This RO system can be used with a storage tank of 20 to 200 gallons. A tank helps meet the impulsive high-volume demand and build a commercial or whole-house Reverse Osmosis solution.

Ice Maker Connection Kit (Model #ICEK)

The iSpring ice maker connection kit can be purchased separately to feed RO water to your refrigerator or water dispenser for crystal-clear ice cubes and great-tasting water.

Troubleshooting

Trouble	Possible Issue	Possible Solution
No water output from the drinking faucet	a. No Water supply. b. No Power supply. c. Incorrect installation. d. Crimped tubing stopped the water flow.	a. Turn on the water supply valve. b. Check if your power adapter is plugged into an outlet. See if there is a switch to turn on for the power supply. c. Verify all tubing connections. d. Check and un-crimp all tubing.
Water is not filling the tank	a. Inlet water pressure is below 45 psi. b. Incorrect installation. c. Tank valve (ABV2K) is closed.	a. Install a booster pump to increase the inlet water pressure; contact iSpring customer service for assistance. b. Check all tubing connections. c. Make sure the tank valve is open.

Trouble	Possible Issue	Possible Solution
Leakage in connections	a. Tubing is not inserted correctly into the port. b. The O-ring inside the fitting does not create a seal. c. Plumber's tape breaks or does not cover tank threads. d. The housing and cap are not tightened or misaligned with the threads.	a. Check the tubing and insert about 1/2" into the port. b. Check whether the O-ring is evenly installed. Replace it if damaged. c. To seal correctly, apply at least 8–10 wraps of Plumber's tape. You may try removing the tape and reapplying it. d. Make sure to tighten the housing or cap correctly.
The system has a continuous drain	a. Inlet water pressure is below 45 psi. The tank cannot be fully filled to shut down the system. b. The automatic shut-off valve (Model #AAS2) or check valve is defective.	a. Increase the inlet water pressure by adding a booster pump. b. Contact the iSpring Customer Service Team for replacement. See the **steps in the last box for** how to fix the valve.
UV light is not on when water flows through	a. No power supply. b. UV light flow sensor switch is off.	a. Check the power adapter and power supply. b. Check the direction you install the flow sensor switch.
Water flow from the drinking faucet is low	a. Tank has not been given enough time to fill. b. Inletwater pressure is below 45 psi.	a. Allow approximately two hours for the tank to fill. b. Increase the inletwater pressure by adding a booster pump.
High TDS in RO water	a. Incorrect installation.	a. Check all tubing connections and the direction of filter installation. Contact the iSpring Customer Service Team if problems still exist.

Steps to test if the AAS2 or the check valve is causing continuous draining:

a. Fill some water in the tank from the RO unit to ensure the drain flows.
b. Close the tank valve.
c. Wait approximately 5 minutes, then check if the drain tubing is still flowing.
d. If no water goes through, the system and the tank are in good condition. **If water flows, the AAS2 or check valve may be defective.** Turn on the system and allow the tank to fill. Tilt the tank to check the weight and ensure it is filled at least partially. Then, turn off the feed water adapter. Leave the system on with the tank valve open for 15-30 minutes. If the tank is emptied, the check valve is defective.

For questions or concerns, please contact us at **support@ispringfilter.com** or visit our help page at **ispringfilter.com/support.**

Glossary and Terms to Know

Add-On Kit (#ACL1): This filter add-on kit adds additional in-line filters to an existing system. It comes with quick-connect elbow fittings, filter clamps, and extra tubing.

Alkaline Remineralization Filter* (#FA15): 6th stage. Remineralizes RO water and neutralizes the pH.

Automatic Shut-Off Valve (#AAS2): A white, four-way valve that starts and stops the system's water production through pressure signals.

Check Valve (#ACV1K): One-way valve preventing water from flowing back into the membrane housing. It is located on the RO water port of the membrane housing.

CTO Carbon Block Filter (#FC15): 3rd stage. 5-micron 10" carbon block filter that reduces chlorine, tastes, and odors before the water reaches the RO membrane.

Drain Saddle (#ADS1K): This saddle attaches to the under-sink drainpipe to secure the drain tube from the system.

Drinking Faucet (#GA1-BN): This is an output source for RO water. It is a non-air gap faucet with a 1/4" tubing connection that fits countertop holes 1/2" to 1 1/2".

Drinking Faucet (#GA1-ORB): This is an output source for RO water. It is a non-air gap faucet with a 1/4" tubing connection that fits countertop holes 1/2" to 1 1/2".

Elbow Fittings (#4044K): Quick-connect elbow fittings used on the system (except the membrane housing and cap). 1/4" tubing connection and 1/4" NPT male thread.

Feed Water Adapter (#AFW43): This adapter connects to your cold-water line and branches off a water supply line to the RO system. It fits 3/8" and 1/2" cold water lines.

Feed Water Solenoid Valve (#ASOW7): This valve controls the booster pump's water supply based on pressure switches set to low or high.

Flow Restrictor (#AFR300): Limits drain water flow, maintaining pressure for the RO process.

Flow Sensor Switch* (#FSS): Detects water flow to control the UV filter.

GAC Granular Activated Carbon Filter (#FG15): 2nd stage. 5-micron 10" granulated activated carbon filter that reduces chlorine, tastes, and odors from the water.

GPD: Gallons per day.

Housing Wrench for Stages 1, 2, and 3 Housings (#AWR2): A housing wrench is used to screw on and unscrew the membrane housing cap and filter housings.

Ice Maker Kit (#ICEK): This Add-on kit allows you to run water from the system to your fridge ice maker or fridge water dispenser.

Leak Stopper (#ALS1): This device cuts off the water supply when it detects a leak, as the sponge absorbs water.

Membrane Housing and Cap (#NW12): Horizontal housing for the RO membrane.

Membrane Housing O-Ring (#ORM): 2 1/2" O.D. The O-ring creates the seal between the membrane housing and the cap.

Polypropylene (PP) Sediment Filter (#FP15): 1st stage. 5-micron 10" filter trapping dirt, rust, and silt.

Post-Activated Carbon Filter (#FT15): This is the 5th stage. The final polishing filter is before the RO water reaches the drinking faucet.

ppm: Parts-per-million, mg/L.

Pressurized Holding Tank (#T32M): A 3.2-gallon tank that forces water to the drinking faucet. Tanks are pre-pressurized to 7-10 psi when empty.

psi: Pounds per square inch, a measure of water pressure.

Quick-Connect Fitting: Easy-to-connect/disconnect fitting. Tubing is inserted past the O-ring, locked by the spider lock, and locking C-clip.

Reverse Osmosis (RO) Membrane (#MC1/MC2/MC7): 4th stage. A high rejection rate, 0.0001 microns, thin-film composite (TFC), is essential for reverse osmosis.

Stage 1, 2, and 3 Housing O-rings (#ORF): 3 5/8" O.D. O-rings create seals for the filter housings.

Stage 1 See-Through PP Filter Housing (#HC12): This transparent housing for the sediment filter allows visual inspection.

Stage 2 GAC Filter Housing (#HW12): Solid white housing that holds the stage 2 GAC filter.

Stage 3 CTO Filter Housing (#HW12): Solid white housing that holds the stage 3 CTO filter.

Quick-Connect T-Fitting on Stage 5 Post Carbon Filter (#7544K): Quick-connect T-fitting is located on the right side of the stage 5 post carbon filter.

Tank Valve (#ABV2K): On/off valve which screws onto the top of the tank.

TDS: Total dissolved solids, a measure of a water source's contamination level.

TDS Meter (#TDS3): Handheld meter used to measure water quality.

Tubing (#T14B or #T14W): 1/4" food-grade tubing used in the system.

UV Replacement Bulb* (#UVB11): Replacement bulb for the UV filter.

UV Transformer/Ballast* (#UVT11A/UVT11B): This is the power supply for the UV filter. The ballast's indicator lights only light up when water is flowing. UVF11A is for 110V, UVF11B is for 220V.

Performance Data Sheet

Models: RCC7-BN, RCC7-BLK, RCC7AK-BN, RCC7AK-BLK,
RCC7AK-UVBN, RCC7AK-UVBLK, RCC7UV

Use Replacement Cartridges: FP15, FG15, FC15, MC7, FT15, FA15, UVB11
Systems tested and certified by NSF International against NSF/ANSI to standard 58 for reduction of Asbestos, Barium, Cadmium, Chromium (Trivalent), Copper, Fluoride, Lead, Selenium, Total Dissolved Solids (TDS).

Substance Reduction	Average Influent	Avg % Reduction	Average Product Water Concentration	Maximum Permissible Product Water Concentration	NSF Reduction Requirements
TDS	740 mg/L	97.9%	16 mg/L	28 mg/L	> 75%
Asbestos	48.58 MFL	> 99.7%	< 0.17 MFL	< 0.17 MFL	> 99%
Barium	11000 µg/L	98.4%	170 µg/L	1500 µg/L	< 2000 µg/L
Cadmium	31 µg/L	98.8%	0.4 µg/L	0.5 µg/L	< 5 µg/L
Chromium (Trivalent)	340 µg/L	99.2%	3 µg/L	11 µg/L	< 100 µg/L
Copper	3100 µg/L	97.8%	68 µg/L	130 µg/L	< 1300 µg/L
Fluoride	10 mg/L	97.4%	0.3 mg/L	0.7 mg/L	< 1.5 mg/L
Lead	150 µg/L	98.9%	1.6 µg/L	2.5 µg/L	< 5 µg/L
Selenium	130 µg/L	99.0%	1 µg/L	3 µg/L	< 50 µg/L
Arsenic (Pentavalent)	320 µg/L	96.1%	8 µg/L	12 µg/L	< 10 µg/L
Cyst	120000 #/mL	98.83%	1300 #/mL	3400 #/mL	> 99.95%
Turbidity	11 NTU	98.6%	0.2 NTU	0.8 NTU	> 0.5 NTU

Operation Specifications:
Inlet Water Pressure: 45–70 psi
Inlet Water Temp.: 40–100°F
pH: 2.0–11.0

Like our products?
Please show your support by writing a product review on the market place where you make your purchase. Even just a quick statement means a lot to us.

Thank you!

iSpringFilter.com

Scan to get your FREE warranty

For questions, comments, or technical support, please contact us at:

support@ispringfilter.com

+1 (678) 261-7611

+1 (470) 560-0012

Monday-Friday 9:00 a.m. - 5:00 p.m. EST

Water's Good®