Save This Manual for Future Reference

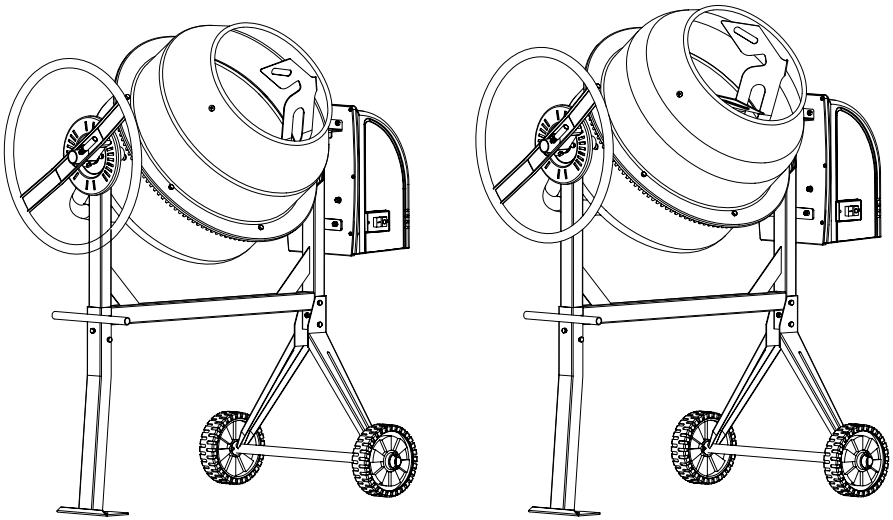

Concrete Mixer

Owner's Manual

MODEL NUMBER : ☐ W46583821

SERIAL NUMBER : _____

Both model number and serial number may be found on the main label.
You should record both of them in a safe place for future use.

FOR YOUR SAFETY

READ AND UNDERSTAND THE ENTIRE MANUAL BEFORE OPERATING MACHINE

SAFETY WARNINGS & INSTRUCTIONS

SYMBOL AFFIXED TO THE MACHINE

1 UNDERSTAND YOUR MIXER

Read and understand the owner's manual and labels affixed to the mixer. Learn its application and limitations as well as the specific potential hazards peculiar to it.

Become familiar with the controls before operating this mixer.

1 STAY ALERT

Do not operate the mixer while under the influence of drugs, alcohol, or any medication that could affect your ability to use it properly.

Do not use this mixer when you are tired or distracted from the job at hand. Watch what you are doing at all times. Use common sense.

1 AVOID DANGEROUS CONDITIONS

Make sure there is adequate surrounding workspace.

Keep your work area clean and well lighted. Cluttered areas invite injuries. Keep area around the mixer clear of obstructions, grease, oil, trash and other debris which could cause persons fall onto moving parts.

Only use or operate the mixer on solid, flat, level ground that is capable to support the weight of the mixer and its load to prevent the mixer from tipping over.

Do not attempt to move the mixer when it is loaded and/or in operation.

This mixer is intended for the production of concrete, mortar and plaster. It is not suitable for the mixing of flammable or explosive substances. Do not use it in areas where fumes from paint, solvents or flammable liquids pose a potential hazard.

1 INSPECT YOUR MIXER

Check your mixer before turning it on. Keep guards in place and in working order. Do not plug mixer with motor cover off.

Check all bolts, nuts, and screws for tightness before each use, especially those securing guards and drive mechanisms. Vibration during mixing may cause these to loosen.

Form a habit of checking to see that all the adjusting tools, shovels, hand trowels and other tools/equipments are removed from mixer area before turning it on.

Replace damaged, missing or failed parts before using it.

Warning labels carry important information. Replace any missing or damaged warning labels.

SAFETY WARNINGS & INSTRUCTIONS

SYMBOL AFFIXED TO THE MACHINE

1 DRESS PROPERLY

Do not wear loose clothing, gloves, neckties or jewelry (rings, wrist watches). They can be caught in moving parts. Protective electrically non-conductive gloves and non-skid footwear are recommended when working. Wear protective hair covering to contain long hair, preventing it from getting caught in machinery. Wear a face or dust mask if the operation is dusty. Always wear safety goggles and/or face shields. Everyday eyeglasses have only impact resistant lenses. They are not safety glasses.

1 DO NOT ABUSE CORD

Never carry mixer by cord or yank it to disconnect it from socket.

Keep cord from heat, oil and sharp edges.

1 EXTENSION CORDS

Extension cords must be no longer than 50 meters in length. The wire section must be 1.5mm$_2$ on 110V to allow sufficient current flow to the motor. Improper use of extension cords may cause inefficient operation of the mixer which can result in overheating and motor damage.

Only extension cords to H07RN-F specification intended for outdoor purpose may be used. Avoid use of free and inadequately insulated connections. Connections must be made with protected material suitable for outdoor use. Make sure that any extension cord connections are dry and safe.

Ensure that the extension cord is carefully laid out avoiding liquids, sharp edges and places where vehicles might run over it. Avoid allowing the extension cord to be trapped underneath the mixer. Unroll it fully or it will overheat and could catch fire.

1 AVOID ELECTRICAL SHOCK

Check that the electric circuit is adequately protected and that it corresponds with the power, voltage and frequency of the motor.

Do not plug or unplug the motor while standing in or around damp or wet ground. Do not use the mixer in wet or damp areas or expose it to rain.

Prevent body contact with grounded surfaces: pipes, radiators, ranges, and refrigerator enclosures.

Make sure your fingers do not touch the plug's metal prongs when plugging or unplugging the mixer.

1 KEEP VISITORS AND CHILDREN AWAY

Keep unauthorized persons away from the mixer.

Do not allow children to handle or climb on or in the mixer.

SAFETY WARNINGS & INSTRUCTIONS

SYMBOL AFFIXED TO THE MACHINE

1 DO NOT OVERREACH

Keep proper footing and balance at all times when loading or unloading the mixer.

Never stand on mixer. Serious injury could occur if the mixer is tipped or if the moving parts are unintentionally contacted. Do not store anything above or near the mixer where anyone might stand on the mixer to reach them.

1 AVOID INJURY FROM UNEXPECTED ACCIDENT

Keep hands out of the way of all moving parts. Do not place any part of your body or any tool, like shovel in the drum during operation. When operating, do not pass hands through the clearance between frame and support arm or the one between the drum and support arm.

1 DO NOT FORCE TOOL

It will do a better and safer job at its design rate. Always work within the rated capacity.

Do not start the motor if the drum is fully loaded. Do not turn mixer off while full of concrete.

Do not use the mixer for a purpose for which it was not intended.

The mixer is not to be towed by any vehicle.

1 NEVER LEAVE MIXER RUNNING UNATTENDED

Do not leave mixer until it has come to a complete stop.

1 DISCONNECT POWER

Never open the motor cover before unplugging the mixer. Disconnect from power supply when not in use, before moving, making adjustments, changing parts, cleaning, or working on the mixer. Consult technical manual before servicing.

1 MAINTAIN YOUR MIXER WITH CARE

Clean the mixer immediately after use. Keep the mixer clean for best and safest performance.

When maintaining this mixer, only the manufacturer's original replacement parts may be used.

1 PROTECT THE ENVIRONMENT

Take left over materials to an authorized collection point or follow the stipulations in the country where the mixer is used. Do not discharge into drains, soil or water.

1 STORE IDLE EQUIPMENT

When not in use, the mixer should be stored in a dry location to inhibit rust. Keep the mixer away from children and others not qualified to use it.

TABLE OF CONTENTS

Safety Warnings & Instructions 2
Electrical Connection 5
Specifications..... 5
Contents of Shipping Container 6
Assembly Instructions 6
Operation Instructions 9
Maintenance Instructions 11
Wiring Diagram 11
Parts Schematic 12

ELECTRICAL CONNECTION

This mixer is double insulated to Class II protection and IP45D rated. The insulation will only remain effective if the original insulating parts are used for repairs and the spaces between the original insulation are maintained.

Double insulation ⧈ eliminates the need for the three-wire grounded power cord and grounded power supply system. Double insulated tools can use either a two or three wire extension cord.

Do not connect either core to the earth pin.

The use of an Residual Current Device (“RCD”), (earth leakage trip), on 110v electrics is recommended. If using an extension cable, plug it directly into the RCD.

When operating in Switzerland, plug the mixer only in sockets protected by fault current breaker.

SPECIFICATIONS

Model Number		**W46583821**
Motor		650W S6 30%
Drum Capacity		5 cuft
Drum Mouth		15 inch
Drum Speed		26.6 / min
Overall Sizes	**L**	47.2 inch
	W	28 inch
	H	57.1 inch
Weight		106 lb

CONTENTS OF THE SHIPPING CONTAINER

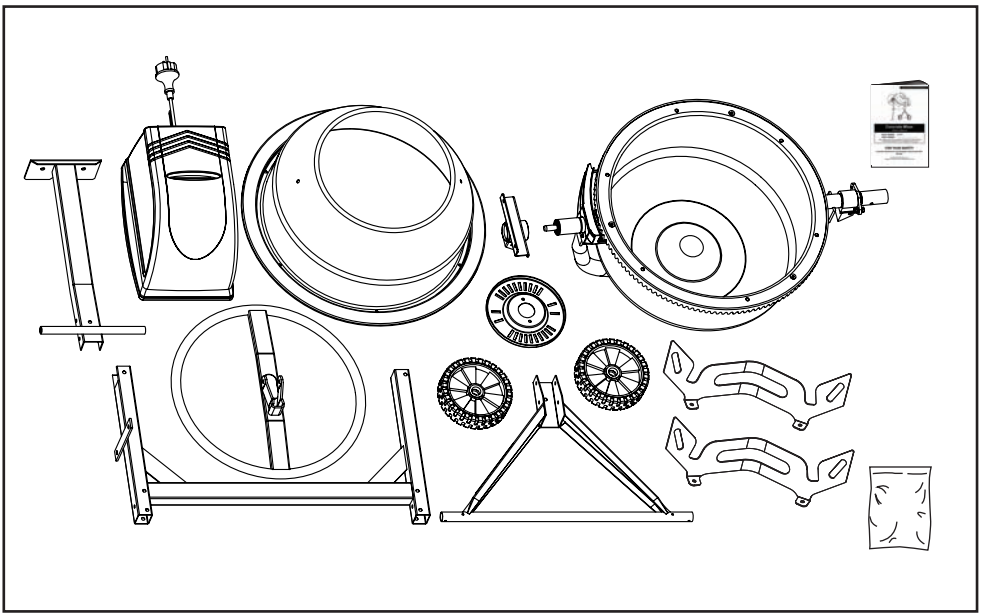

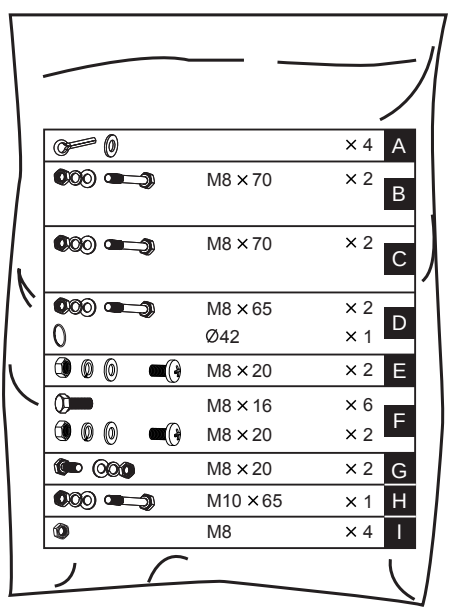

		× 4	A
	M8 × 70	× 2	B
	M8 × 70	× 2	C
	M8 × 65	× 2	D
	Ø42	× 1	
	M8 × 20	× 2	E
	M8 × 16	× 6	F
	M8 × 20	× 2	
	M8 × 20	× 2	G
	M10 × 65	× 1	H
	M8	× 4	I

ASSEMBLY INSTRUCTIONS

Two people assist in assembly recommended.

THE STAND

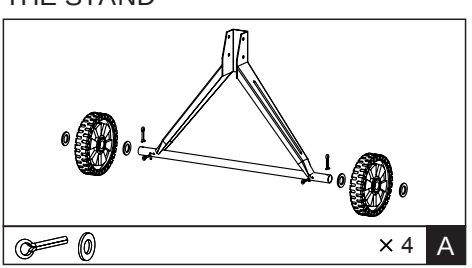

1. With a split pin inserted into the inner holes in each stub axle, place a flat washer, then a wheel followed by another flat washer. Insert another split pin into the axle holes outside each flat washer. Bend each side of the pins outward so they do not fall out.

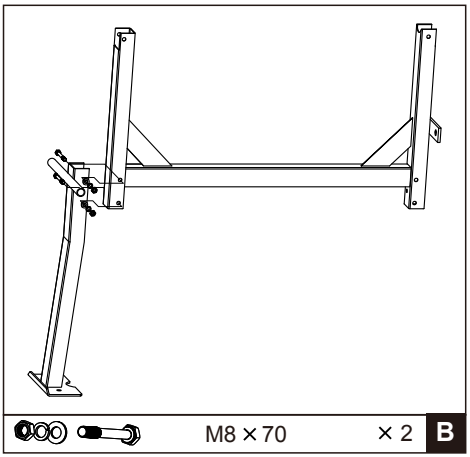

2. With the frame lying on its side, attach the support leg as shown. Insert two M8X70 hex bolts through the holes from one side, then flat washers, lock washers and nuts from the other side.

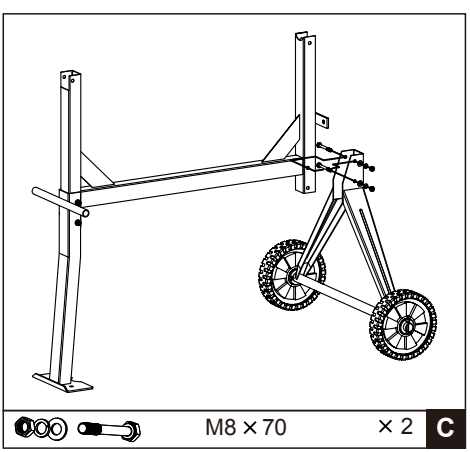

3. Turn the frame over and attach the axle bracket with wheels in the same manner.

4. Make sure all bolts and nuts are tightened.

THE BOTTOM DRUM

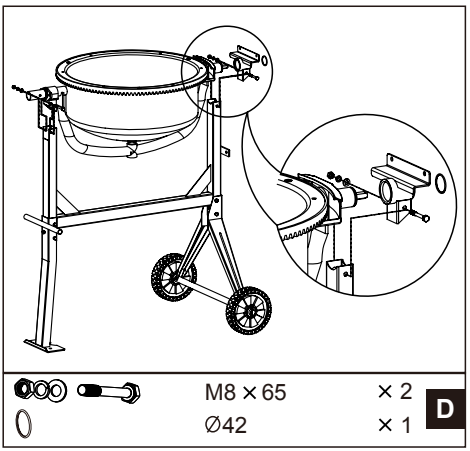

1. Slide the bearing block on the shaft. Hold it in place with ∅42 spiral ring.

2. Carefully, and with two people, set the bottom drum with support arm onto the side supports of the stand as shown, so that the bearing blocks slot into the channels provided by the side supports. The larger diameter shaft should be at the leg end of the stand.

3. At each side, line up the holes in the side support with those in the bearing block and insert a M8X65 hex bolt from one side, then a flat washer, lock washer and nut from the other side. Tighten with a wrench.

THE MIXING BLADES

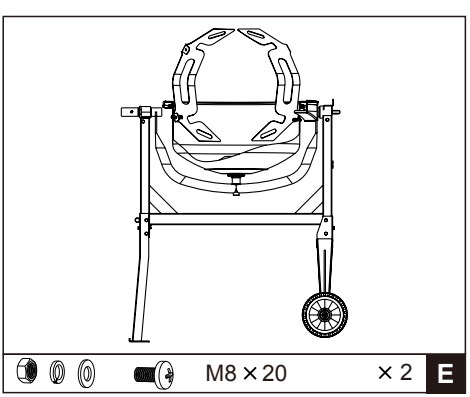

Mount the mixing blades inside the bottom drum loosely as shown - Two holes are provided at the base of the drum into which a M8X20 bolt may be inserted from the outside. A leather washer, flat washer, lock washer and a nut should be threaded on loosely on the inside. The leather washer should be placed under the blade down against the drum.

NOTE: Two arrows are labeled on upper drum and bottom drum to make their position relation. If you have any difficulty in correctly positioning the mixing blades, it is helpful if you temporarily mount the upper drum on the top of the bottom drum, rotating it so that the two arrows line up.

THE UPPER DRUM

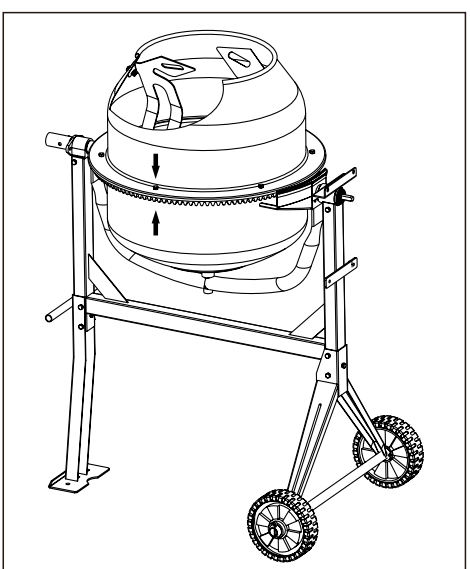

	M8 × 16	× 6	F
	M8 × 20	× 2	

1. Position the upper drum on bottom drum over the rim, making sure the mounting holes align in both as well as the labeled arrows.
2. Screw a M8X16 hex bolt with lock and flat washers into each threaded hole in the rim/ring gear. Make sure the tightening process is carried out progressively.
3. Secure the mixing blades to the upper drum by inserting two M8X20 cross headed screws, from the outside through the holes in the drum.
4. A leather washer should be positioned inside between the drum and blade. Secure the mixing blade on the inside using a flat washer, spring washer and nut.
5. Finally, ensure top and bottom mixing blade mountings are tight.

THE TIPPING WHEEL

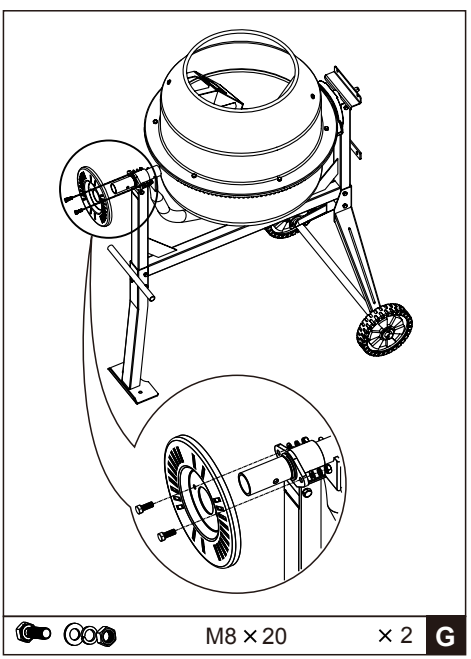

	M8 × 20	× 2	G

1. Slide the locking plate over the large diameter shaft at the leg end of the frame with the rim facing inwards as shown. Secure with two M8X20 bolts, each with a nut, lock and flat washers.

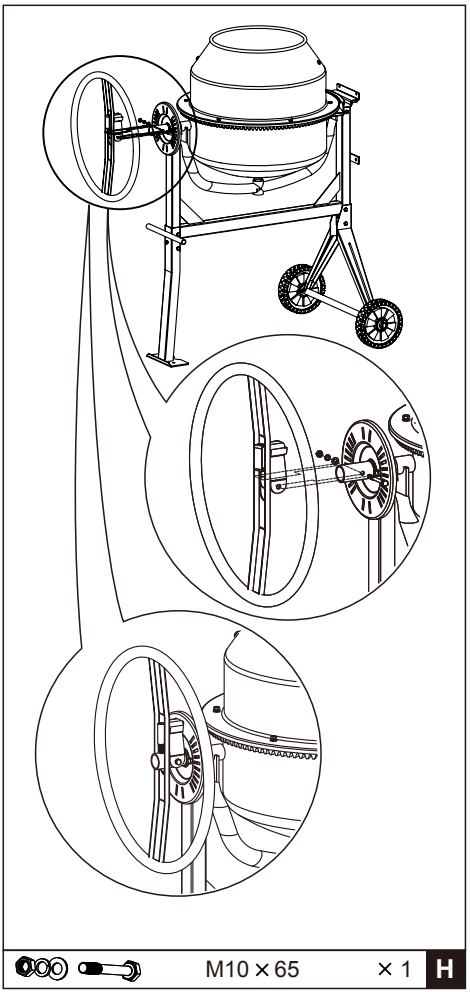

2. The spring is clamped in its holder by a U shaped plate for easier assembly. Slide the wheel over the larger diameter shaft until the holes in the bracket line up with the hole drilled. Insert a M10X65 hex bolt and screw on a nut with flat and lock washers from the other side. Screw the nut up against the bracket firmly, but not so tightly so as to prevent the wheel from pivoting about the bolt. Free the spring by removing the U shaped plate.

NOTE: The wheel must be allowed to pivot about the bolt so that the lugs on the bracket can be engaged or disengaged from the slots in the locking plate.

THE TRANSMISSION CASE

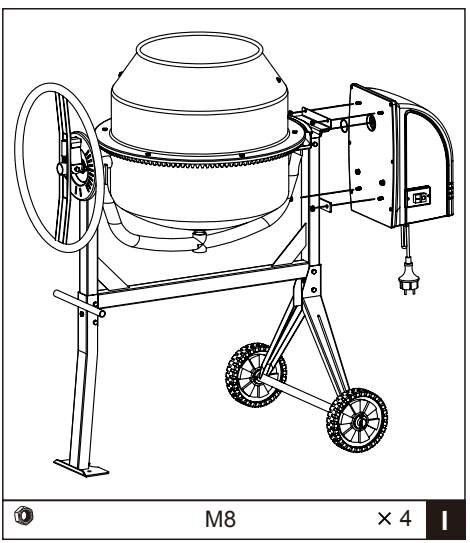

Lining up the keyways, slide the transmission case over the pinion shaft. Secure the case to the frame with four M8 nuts.

OPERATION INSTRUCTIONS

DRUM TILTING

The spring-loaded tipping wheel with locking lugs provides an easy positive control of the drum which can be locked in the mix, discharge and stored position.

The drum is locked in position by lugs on the self-locating tipping wheel which engage into the locking plate on the mixer frame. To tilt the drum, withdrawn the tipping wheel to dis-engage the locking lugs. This then allows the tipping wheel and drum to be turned in the same direction.

To retain the drum in position, aligning the lugs with the slots, release the tipping wheel a little while retaining the drum. Rotate the tipping wheel until the locking lugs engage into the locking plate on the mixer frame.

Loading/Mixing Position

For Mortar

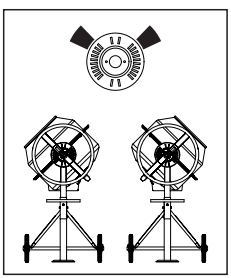

For Concrete

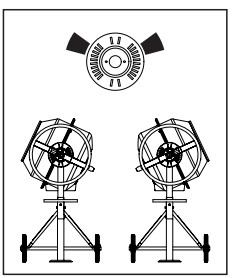

Emptying Position

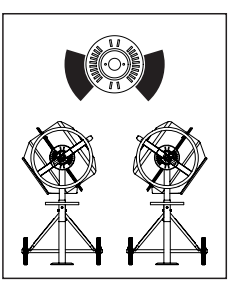

Storage Position

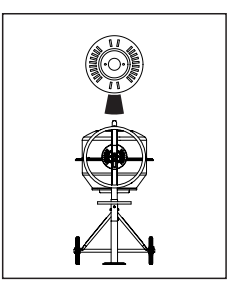

LOADING

Completely unwind the extension cord. Connect it to the concrete mixer first before plugging in power supply.

Always start the mixer before loading the drum. Loading the drum with drum rotating.

Do not throw material into the mixer to avoid sticking firmly to the back of the drum. Trickle it steadily over the ram.

NOTE: A built-in thermal protecter is arranged in the motor to prevent it from overheating. The thermal protecter restores automatically when the motor cools down.

For best results, proceed as follows:

1. Add the required amount of gravel into the drum.
2. Add the required amount of cement into the drum.
3. Add the required amount of sand into the drum.
4. Pour the required amount of water into the drum.

EMPTYING

Do not turn mixer off while full of load. Emptying the drum with drum rotating.

CLEANING

Never put hands inside the drum with drum rotating.

Thoroughly clean the mixer at the end of each day's operation. Keep your mixer clean. The slightest trace of material left in the drum will harden and attract more each time you use it until the machine is useless. Dried cement should be scraped out of the drum. Do not throw bricks into mixer drum to clean it out. Do not beat on the drum with a shovel, a hammer or other tools to break up accumulations of dried cement mix, as damage to the mixer may result. The drum may be scoured for approximate 2 minutes, using 1" gravel and water mixture. Then discharge the gravel/water mixture and hose down the drum assembly inside and out. The IP45D protection class construction of the concrete mixer enables you to hose down the drum assembly safely.

Do not pour or spray water directly over the motor cover, especially the openings in it.

Wipe off any external material on the motor cover. Do not use petrol, turpentine, lacquer or paint thinner, dry cleaning fluids or similar products. The use of chemical products or solvents may affect the properties of the cover which was made of high density polyethyiene PET.

MAINTENANCE INSTRUCTIONS

Ensure the extension cord is always unplugged before the motor cover is removed.

The drive belt is under constant even tension by a spring loaded jockey. No adjustment apart from a touch of grease on the spindle.

The bearings are sealed for life.

The wiring diagram and parts schematic in this manual are as reference tools only. Neither the manufacturer nor distributor makes any representation or warranty of any kind to the buyer that he or she is qualified to make any repairs to the product or that he or she is qualified to replace any parts of the product. Only qualified technicians should repair the mixer. Any maintenance and repairs carried out, to any of the electric components must be undertaken by a qualified electrician.

Parts in a circle should only be fitted by a qualified electrician.

WIRING DIAGRAM

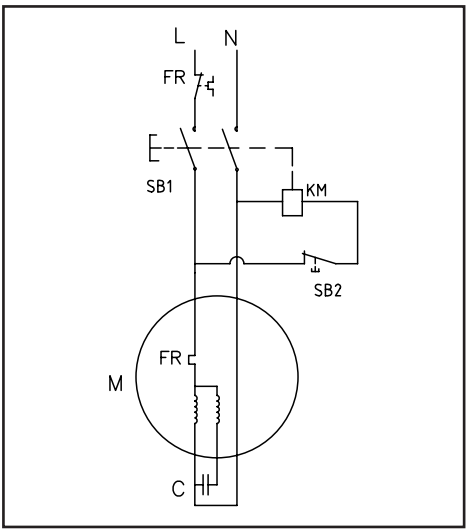
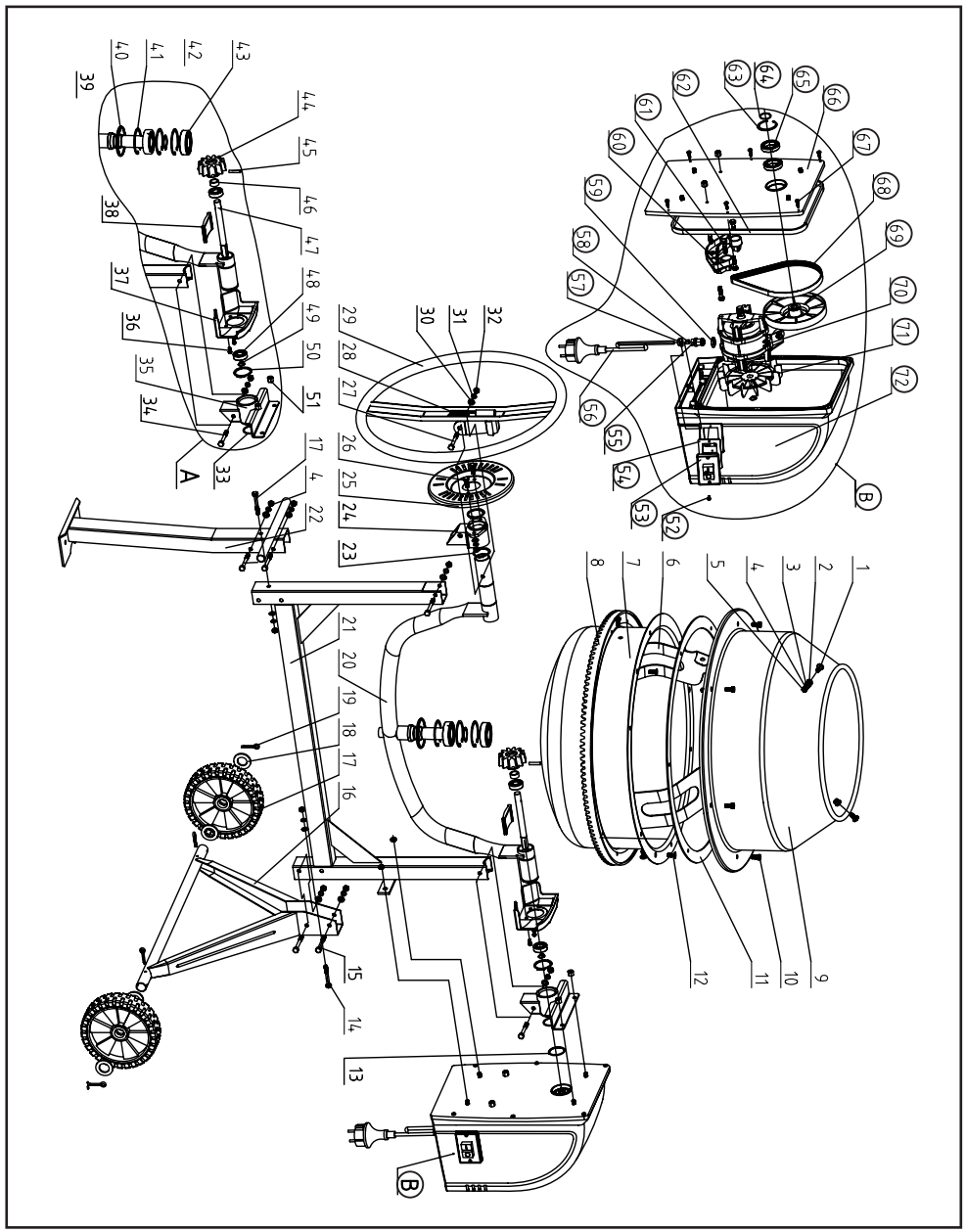
PARTS SCHEMATIC