VEIKOUS

12X20 Carport

Instructions for Assembly

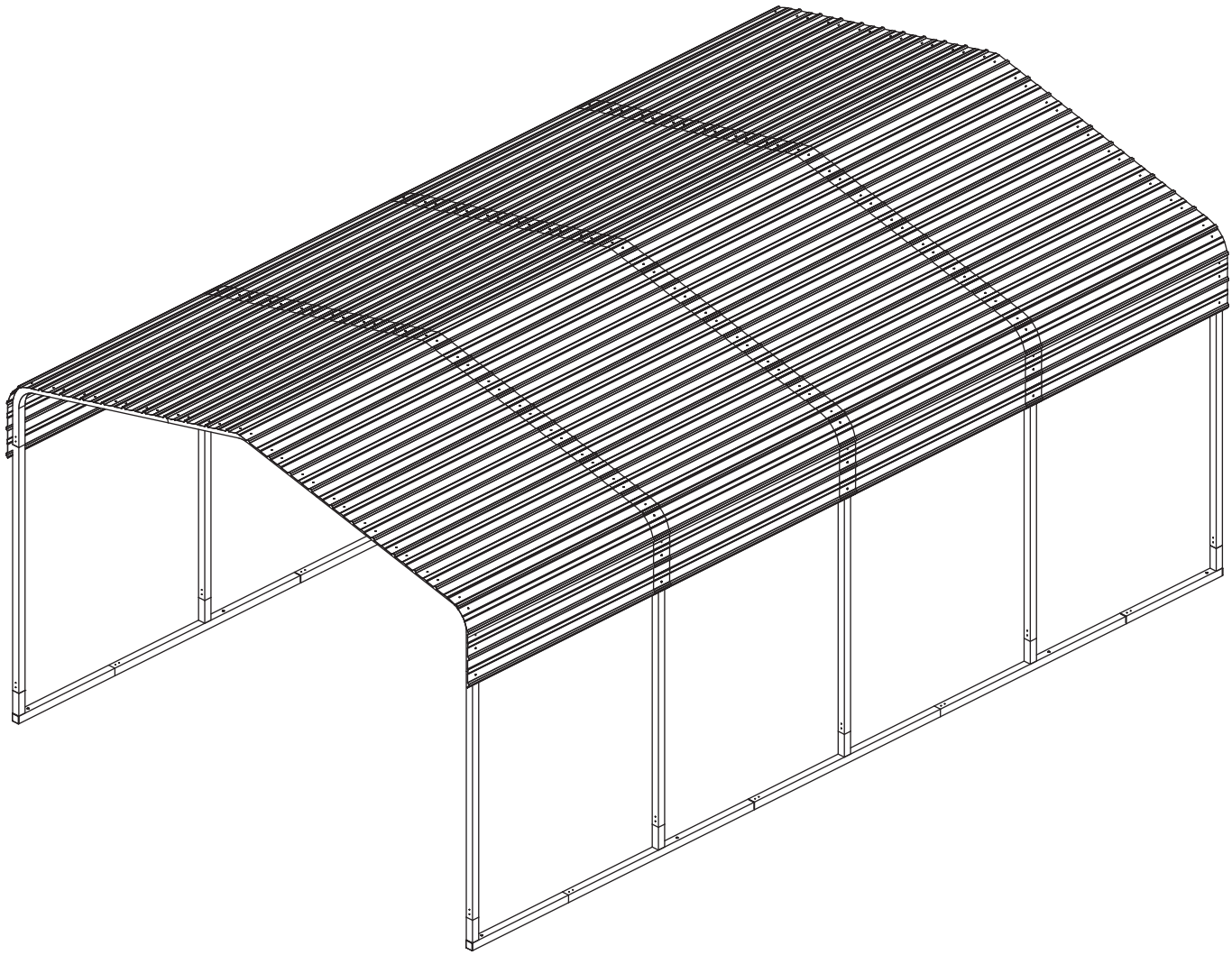

www.veikous.com

customerservice@veikous.com

STOP

MISSING A PART?
CALL US BEFORE GOING BACK TO THE STORE

The store where you made your purchase
Does not stock parts for this item.
If you have assembly questions or you are missing or have damaged parts,please call

1-858-324-1911

(Mon - Sun, 10:00 am to 7:00 pm EST)

you can also e-mail customerservice@veikous.com

or visit www.veikous.com

Please prefer email contact. Due to busy lines, there may be a wait for calls to be answered.

Please have the following information ready when you contact us, so we can assist you promptly.

- Order number or PO number (you can find the info on your invoice, receipt or platform account).
- The model number of the product (printed on the package box).
- Description of the part from the parts list.

- Read entire assembly manual,paying special attention to the important tips and safety information .
- Ensure there are no missing pieces by first separating and identifying all parts.
- Make sure to check packing material for small parts that may have fallen out during shipment.
- Structures are not intended for public use.The Company does not warranty any of its residential structures subjected to commercial use such as:Daycare,Preschool,Nursery School,Recreational Park,or any similar Commercial Application.
- This manual contains helpful information concerning assembly preparation,installation procedure and required maintenance.
- Always keep safety in mind as your structure is being built.
- Keep these instructions for future reference.

SAFETY PRECAUTIONS...

Safety precautions MUST be followed at all times throughout the construction of your building!

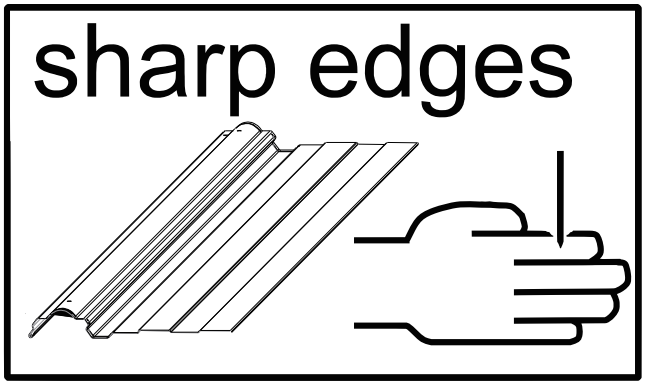

Care must be taken when handling various pieces of your building since many contain sharp edges. Please wear work gloves, eye protection and long sleeves when assembling or performing any maintenance on your building.



Keep children and pets away from the worksite during construction and until the building is completely assembled. This will help avoid distractions and any accidents which may occur.

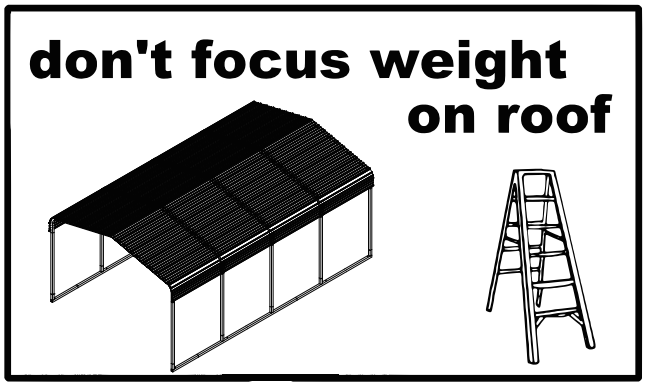

NEVER concentrate your weight on the roof of the building. When using a step ladder make sure that it is fully open and on even ground before climbing on it.



Practice caution with the tools being used in the assembly of this building. Be especially familiar with the operation of all power tools.



Do NOT attempt to assemble your building on a windy day. The large panels can catch the wind like a “sail”, causing them to be whipped around making construction difficult and unsafe.

Do NOT attempt to assemble your building before double checking that you have all the parts indicated in the parts lists as well as all hardware Any building left partially assembled may be seriously damaged by even light winds.

ASSEMBLY TIPS & TOOLS

Watch the Weather Closely: Be sure the day you choose to install your building is dry and calm. Do ***NOT*** attempt to assemble your building on a windy day. Be careful on wet or muddy ground.

Use Teamwork: Two or more people are required to assemble your building. One person can hold the parts or panels in place while the other person fastens them together and handles the tools. This makes the process of assembling your building faster and safer.

Tools and Materials: Here is a list of some basic tools and materials you will need to assemble your building. Decide which method of anchoring and the type of base you will use to make a complete list of the materials you will need.

WHAT YOU NEED

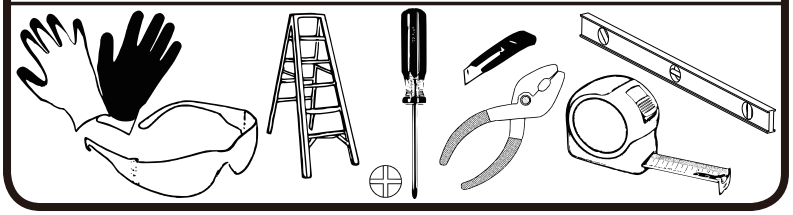

- **Work Gloves**
- **Safety Glasses**
- **Step Ladder**
- **No. 2 Phillips Screwdriver (Magnetic Tip Preferred)**
- **Utility Knife or Scissors**
- **Pliers**
- **Carpenter's Level**
- **Tape Measure**

RECOMMENDED TIME SAVERS

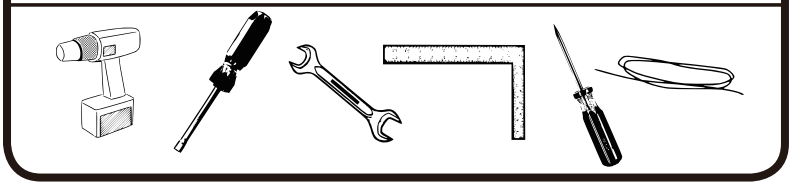

- **Power Drill (Cordless, Variable Speed)**
- **Nut Driver or Wrench**
- **Square**
- **String (for squaring the frame)**
- **Awl (to align holes)**

BASE PREPARATION TOOLS

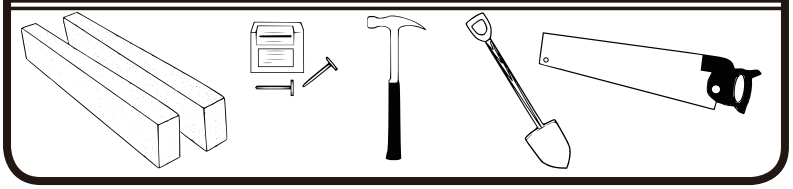

- **Lumber and/or Concrete**
- **Hammer and Nails**
- **Spade or Shovel**
- **Hand Saw or Power Saw**

How to Select and Prepare Your Building Site: Before you start to assemble your building, you will want to decide on a good location. The best location is a level area with good drainage.

- Allow enough working space so it is not difficult to move parts into position for assembly. Be sure there will be enough space at the entrance for the doors to completely open. Also, there needs to be enough space outside the building to be able to fasten the panel screws from the outside.

- Before assembling any parts, your base should be constructed and an anchoring system should be ready to use.

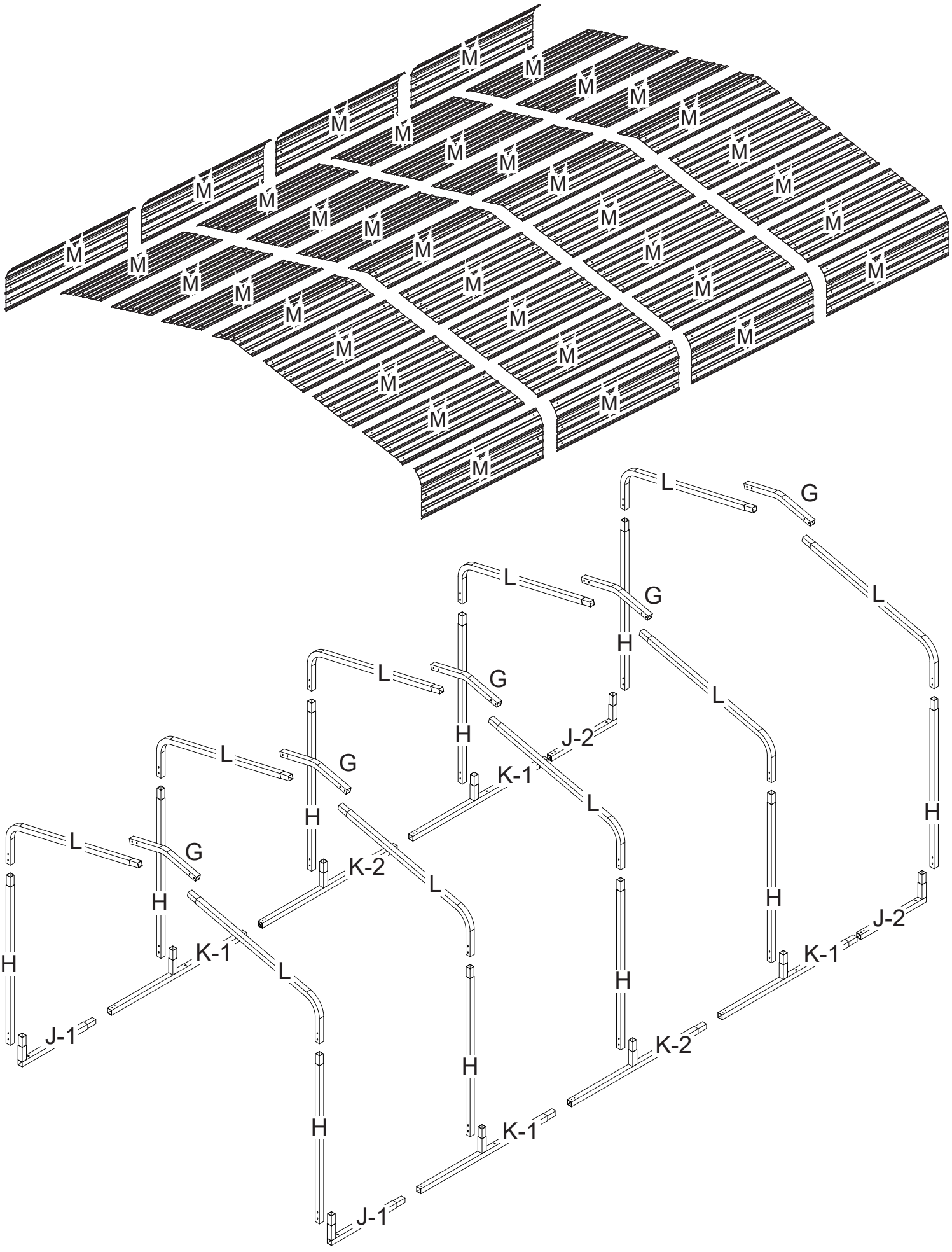
M
L
G
H
J-2
K-1
K-2
J-1

Accessories List

A : 290



C : 8



D : 2

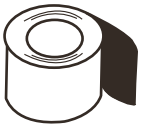

A3 : 4

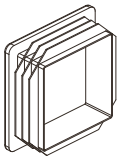

1



G : 5



H : 10



J-1 : 2

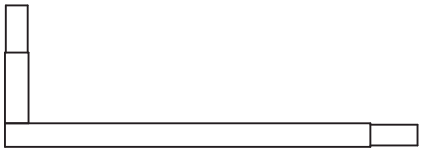

J-2 : 2

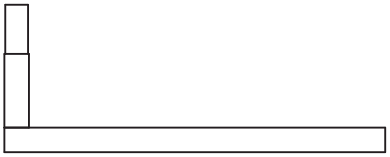

K-1 : 4

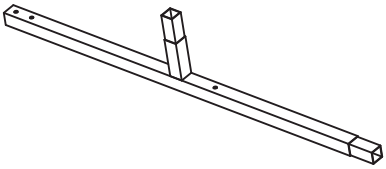

K-2 : 2

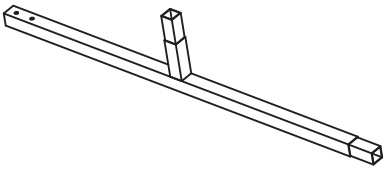

L : 10



M : 36

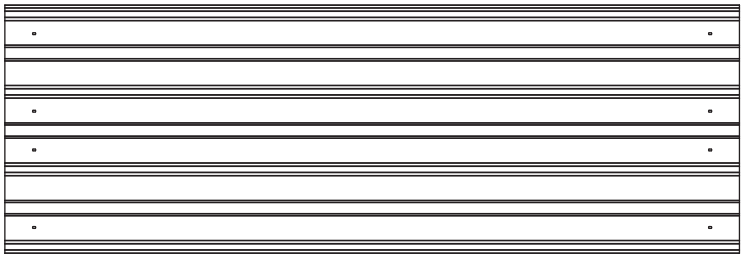

CHECK LIST (BOX 1 OF 5)

PG0216-04-1 C1

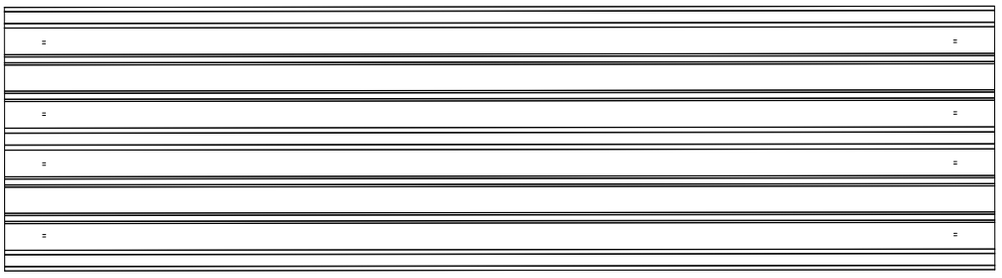

M x18

CHECK LIST (BOX 2 OF 5)

PG0216-04-1 C2

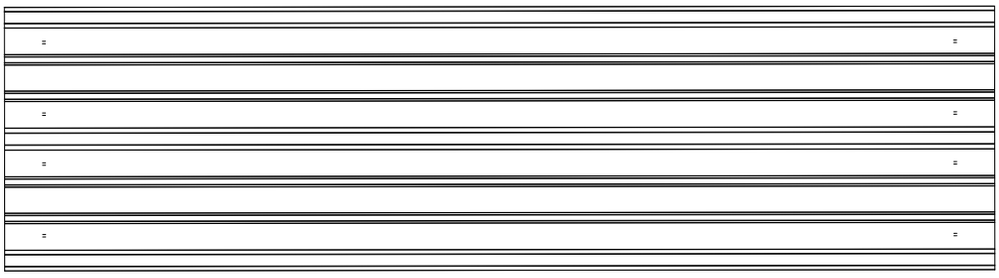

M x18

CHECK LIST (BOX 3 OF 5)

PG0216-04-1 C3

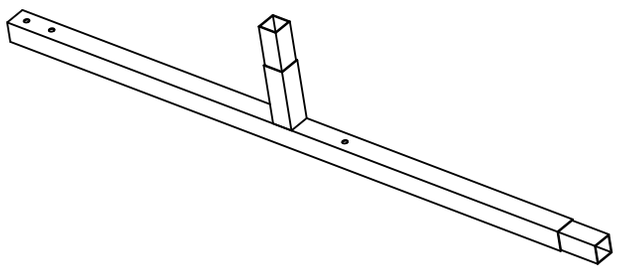

K-1 x4

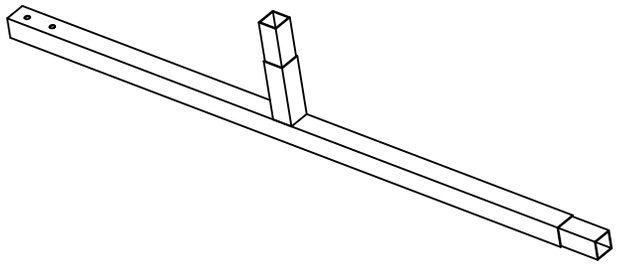

K-2 x2

CHECK LIST (BOX 4 OF 5)

PG0216-04-1 C4

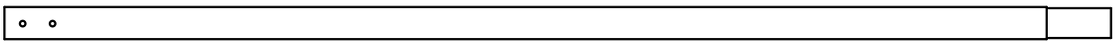

H x10

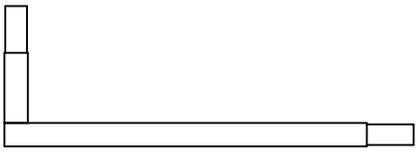

J-1 x2

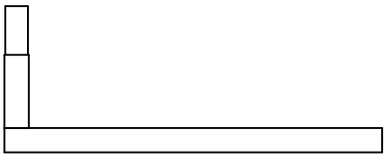

J-2 x2

CHECK LIST (BOX 5 OF 5)

PG0216-04-1 C5

IM

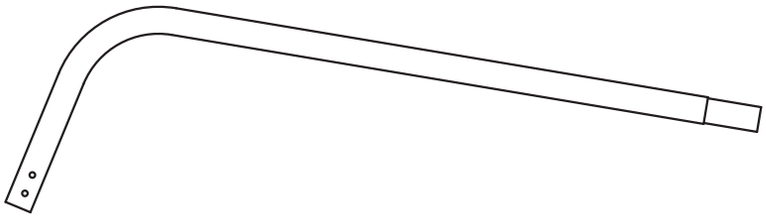

L x10



G x5



A x290



C x8



D x2

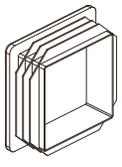

A3 x4



x1

Step1

PART	NO.	Qty.	List.
	J-1	2	
	J-2	2	
	K-1	4	
	K-2	2	
	A	16	
	A3	4	

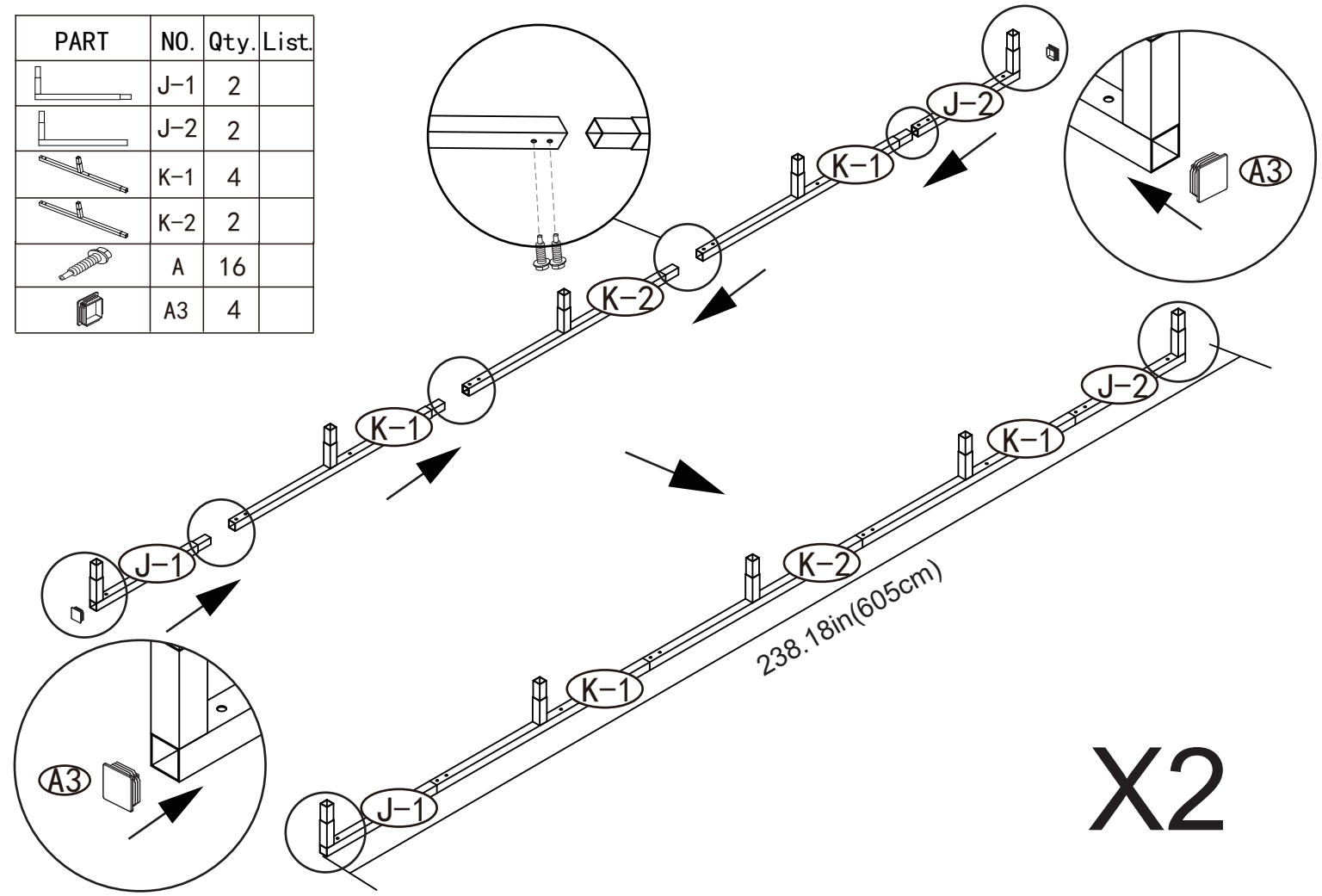

Step2

PART	NO.	Qty.	List.
	L	10	
	G	5	
	A	20	

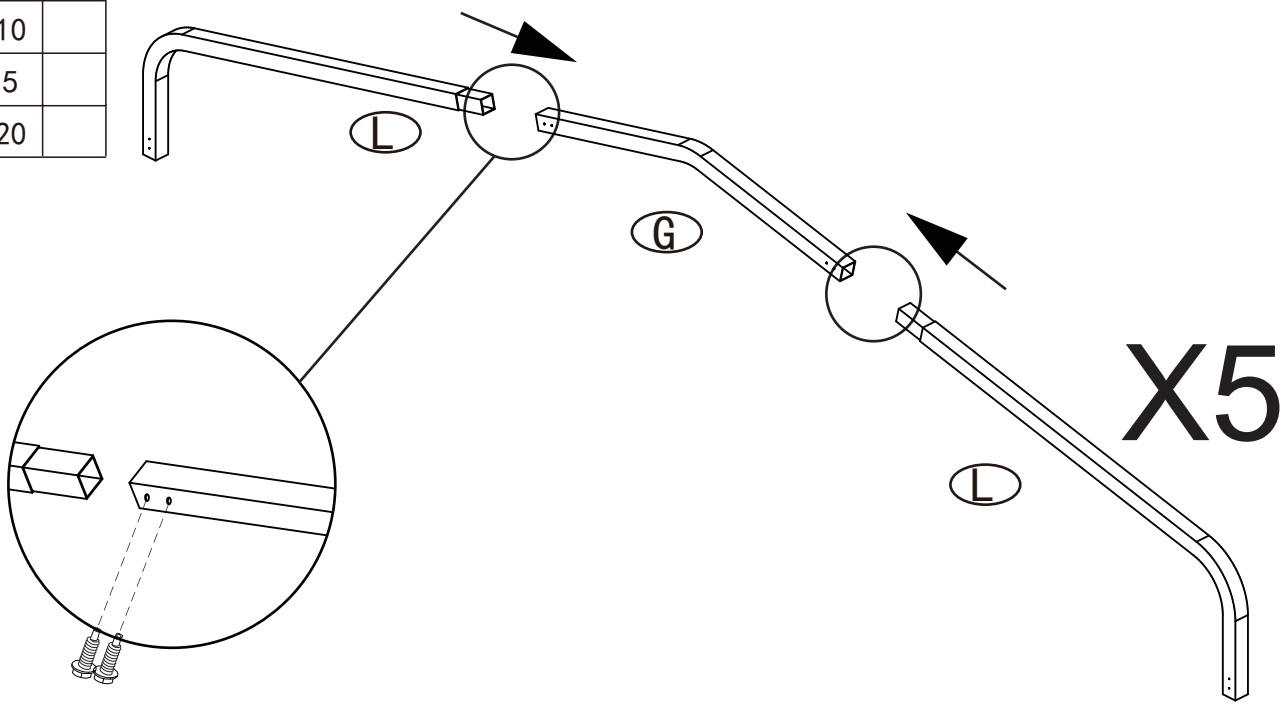

Step3

PART	NO.	Qty.	List.
	H	10	
	A	20	

Connect Part L and Part H with two Screw A.
Note: The Part L has pre-drilled holes, while Part H has no pre-drilled holes.

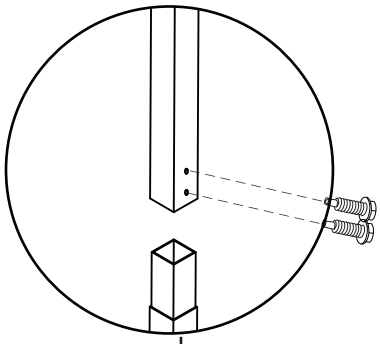

There are 2 holes on both sides of the connecting end of part L and part H(the holes on both sides are opposite), you can use either side as you like.

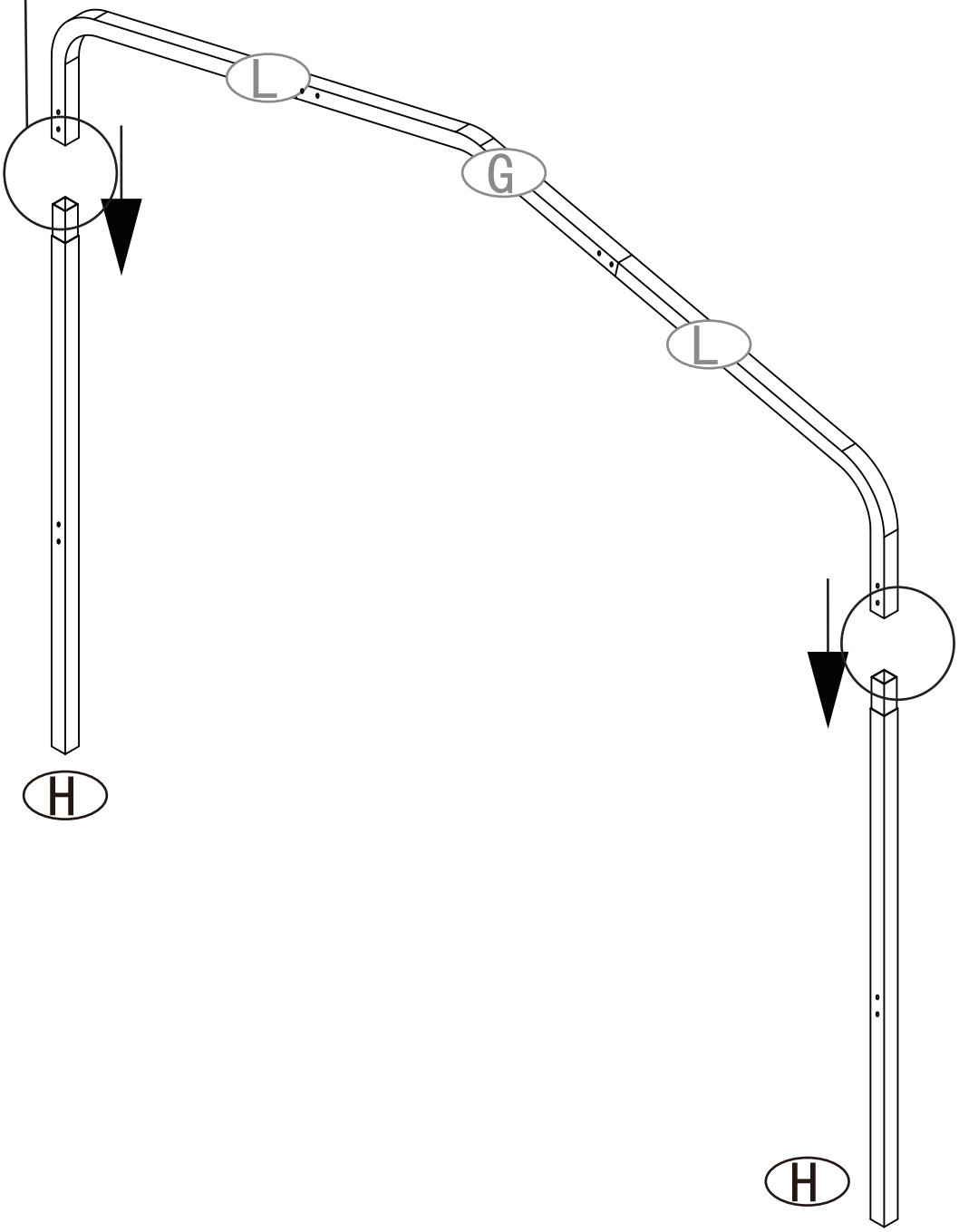

X5

Step4

PART	NO.	Qty.	List.
	A	20	

Step5

PART	NO.	Qty.	List.
	C	4	

Please fix the four anchors on the same side first

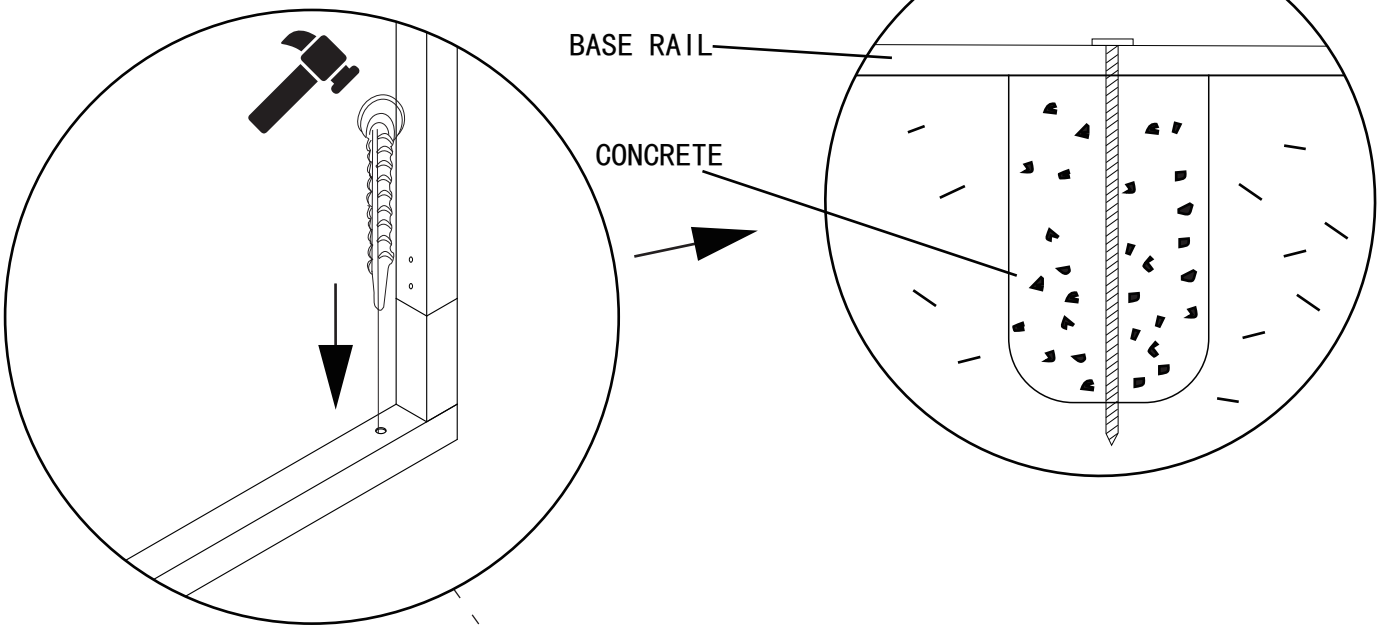

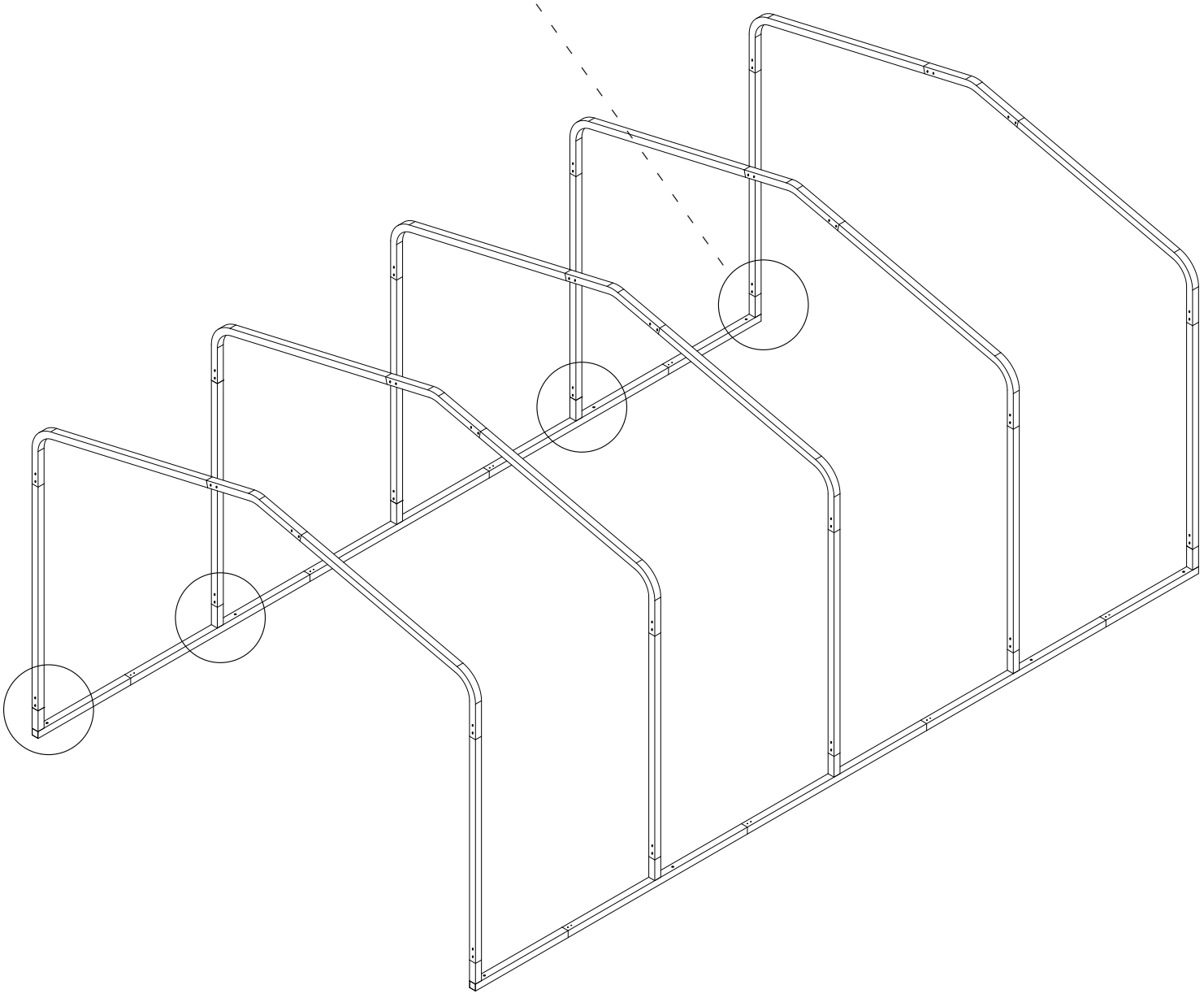

Step6

PART	NO.	Qty.	List.
	C	4	

When X=Y and H1=H2,
please fix the four anchors on the other side

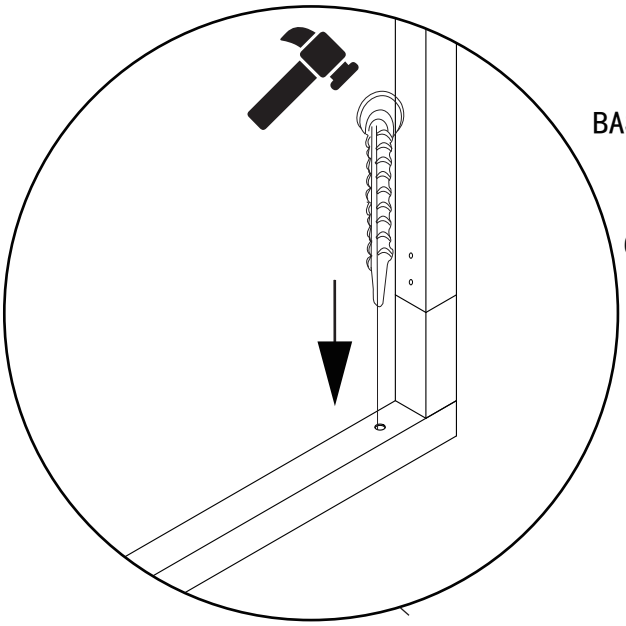

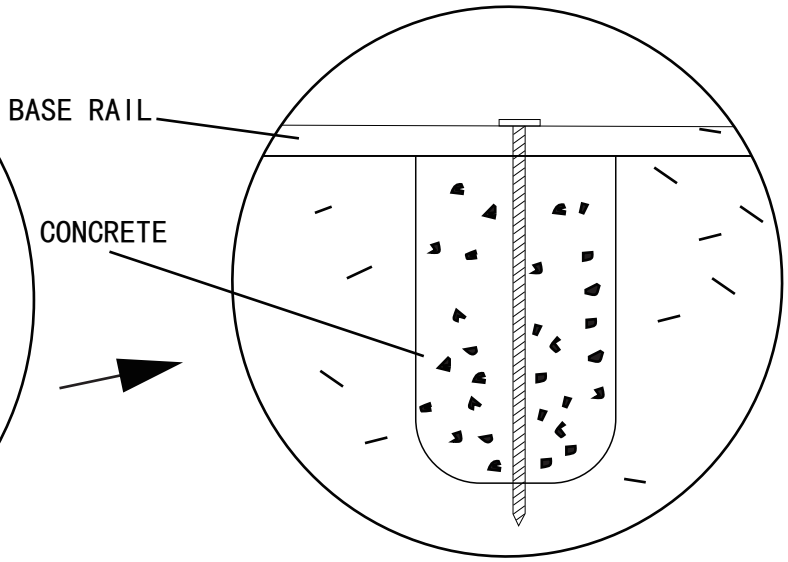

In Steps 5 and 6, the C component assembled on J-1—K-1—K-2—K-1—J-2 must be firmly anchored t o a solid foundation to ensure that it does not sha ke, as shaking can cause the snowhouse to tilt and then collapse. Note: This product must be installed on a solid foundation in snowy winter weather.

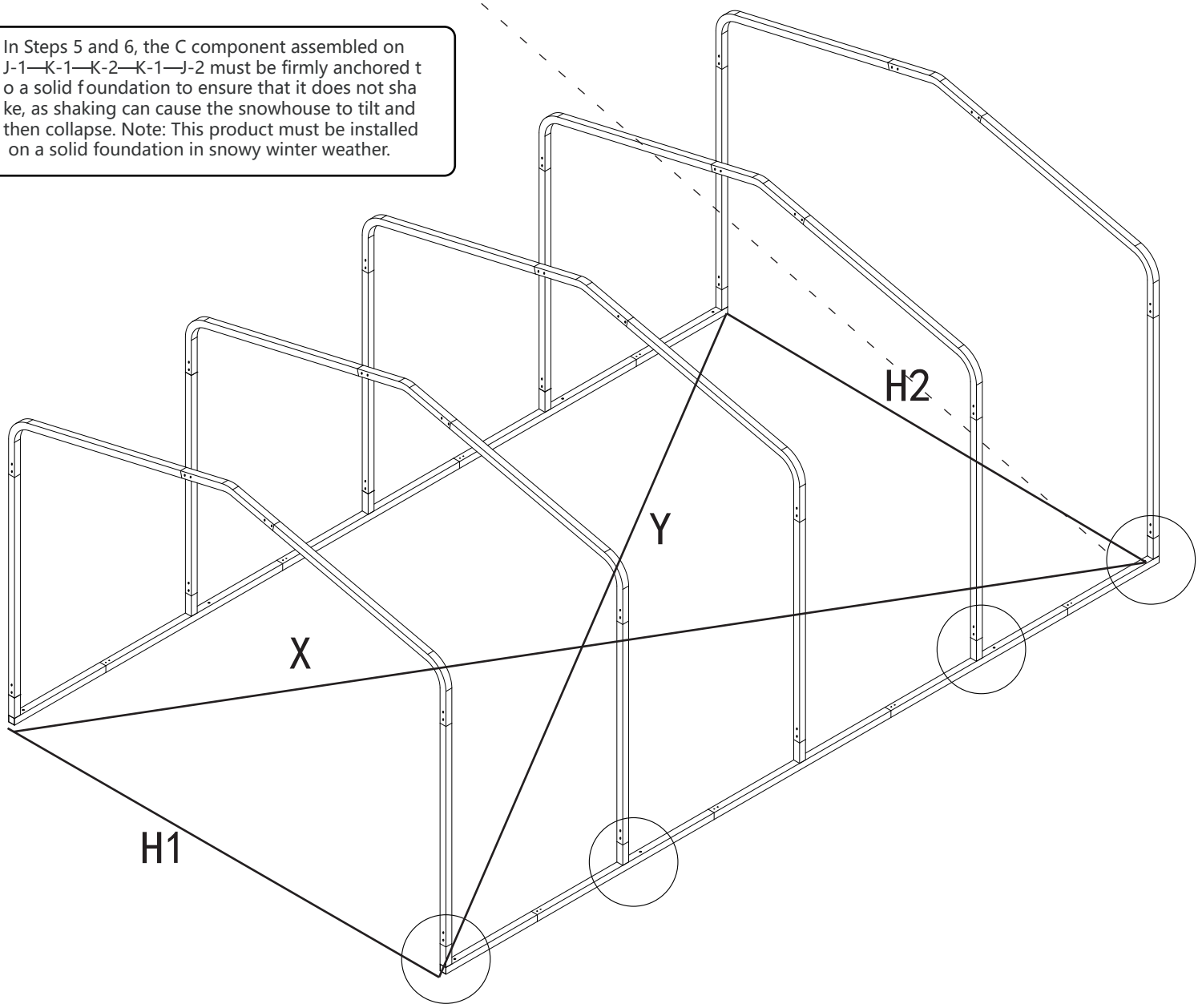

Step7

PART	NO.	Qty.	List.
	M	4	
	A	10	
	D		

Use Part D at the junction of two Part M.
Note: Part D should be close to the edge of Part M,
not too far in to prevent leakage.
If Part D doesn't fill the junction, you can purchase glass glue to fill it completely.

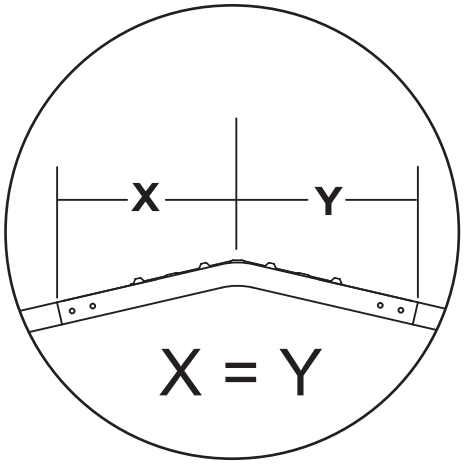

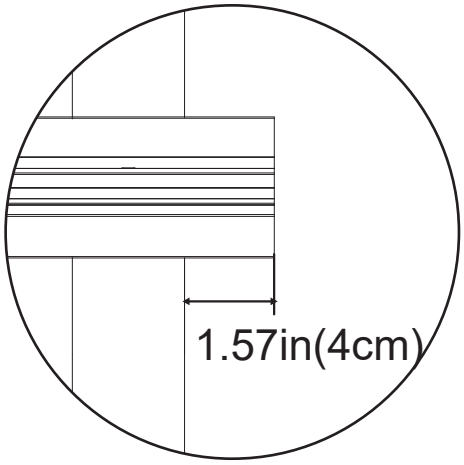

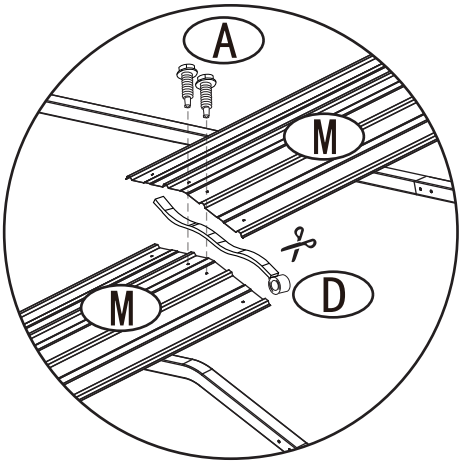

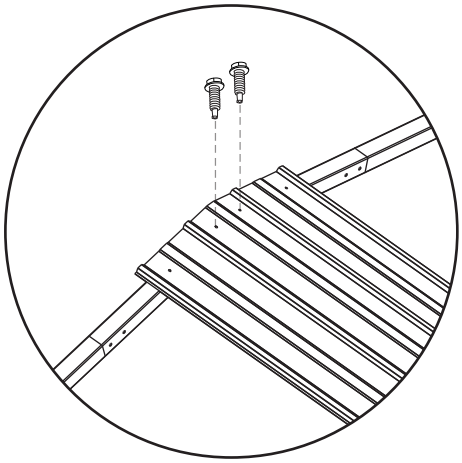

Step9

PART	NO.	Qty.	List.
	M	12	
	A	60	
	D		

Use Part D at the junction of two Part M.
Note: Part D should be close to the edge of Part M,
not too far in to prevent leakage.
If Part D doesn't fill the junction, you can purchase glass glue to fill it completely.

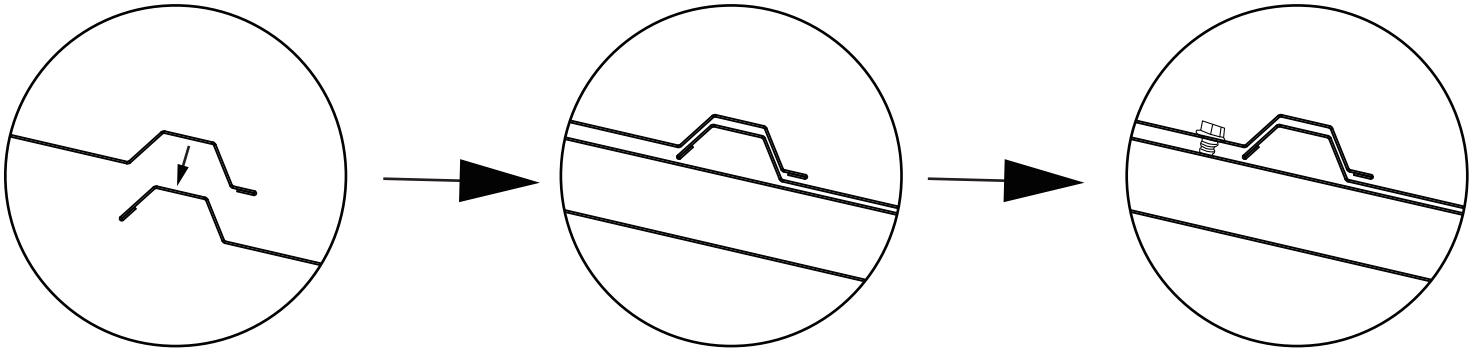

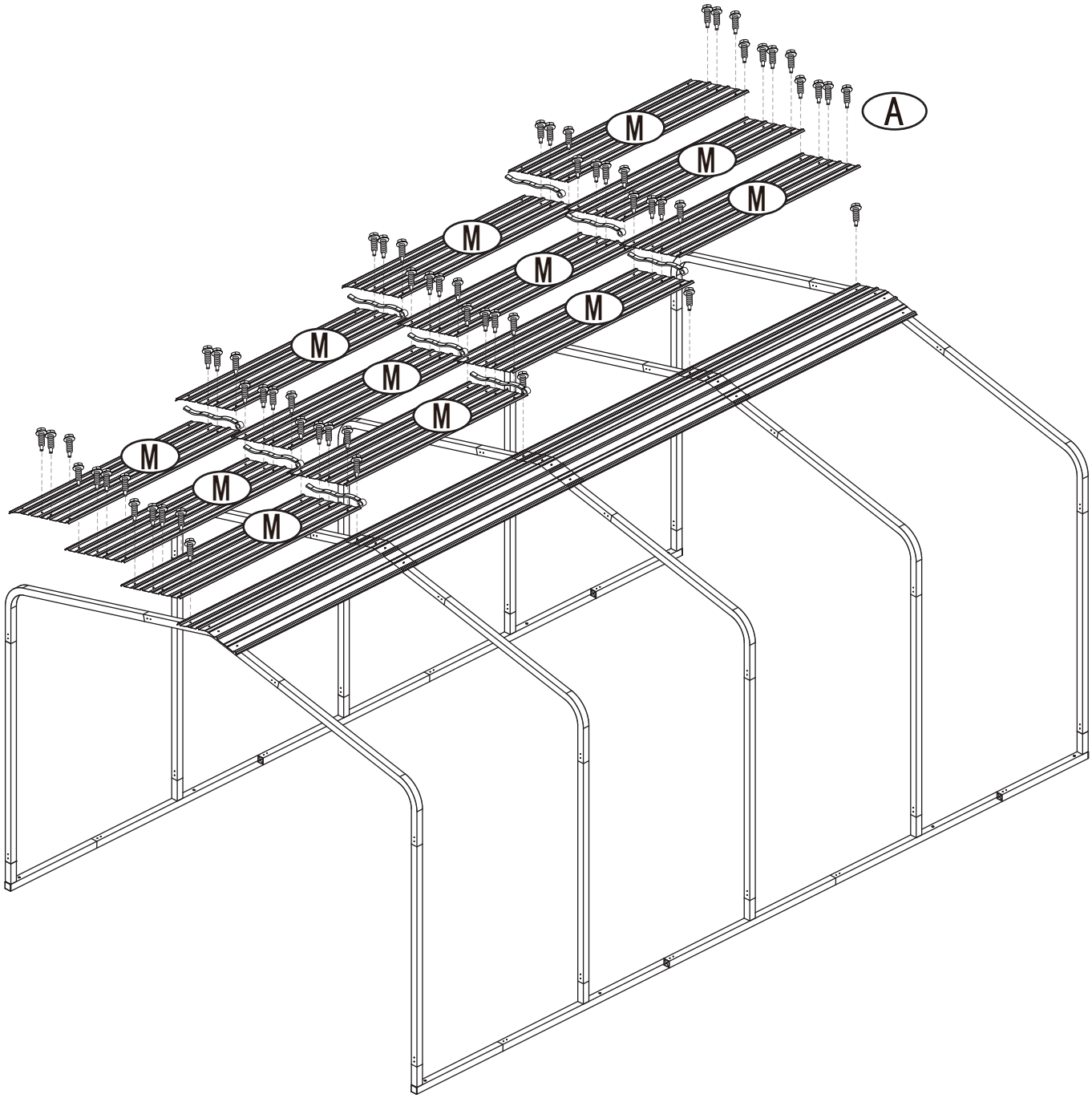

Step10

PART	NO.	Qty.	List.
	M	4	
	A	25	
	D		

Use Part D at the junction of two Part M.
Note: Part D should be close to the edge of Part M,
not too far in to prevent leakage.
If Part D doesn't fill the junction, you can purchase glass glue to fill it completely.

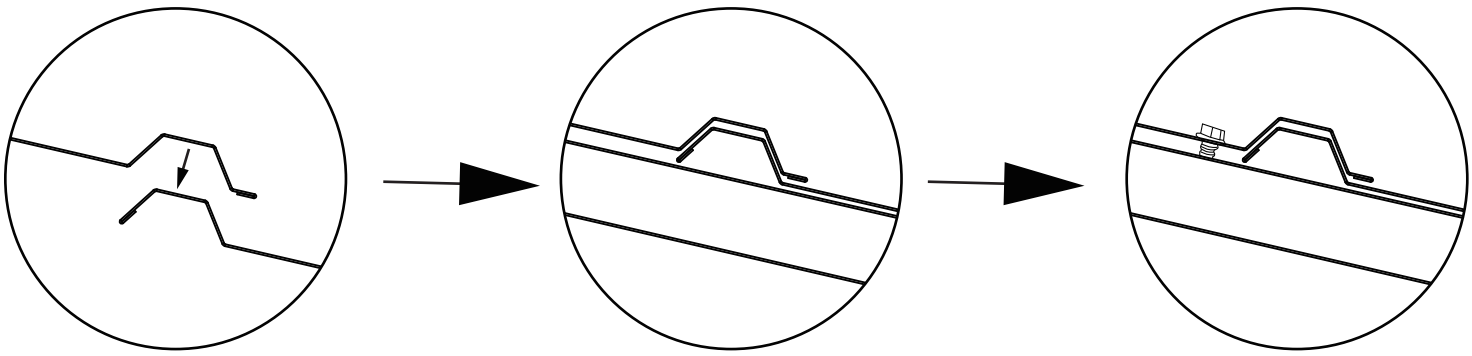

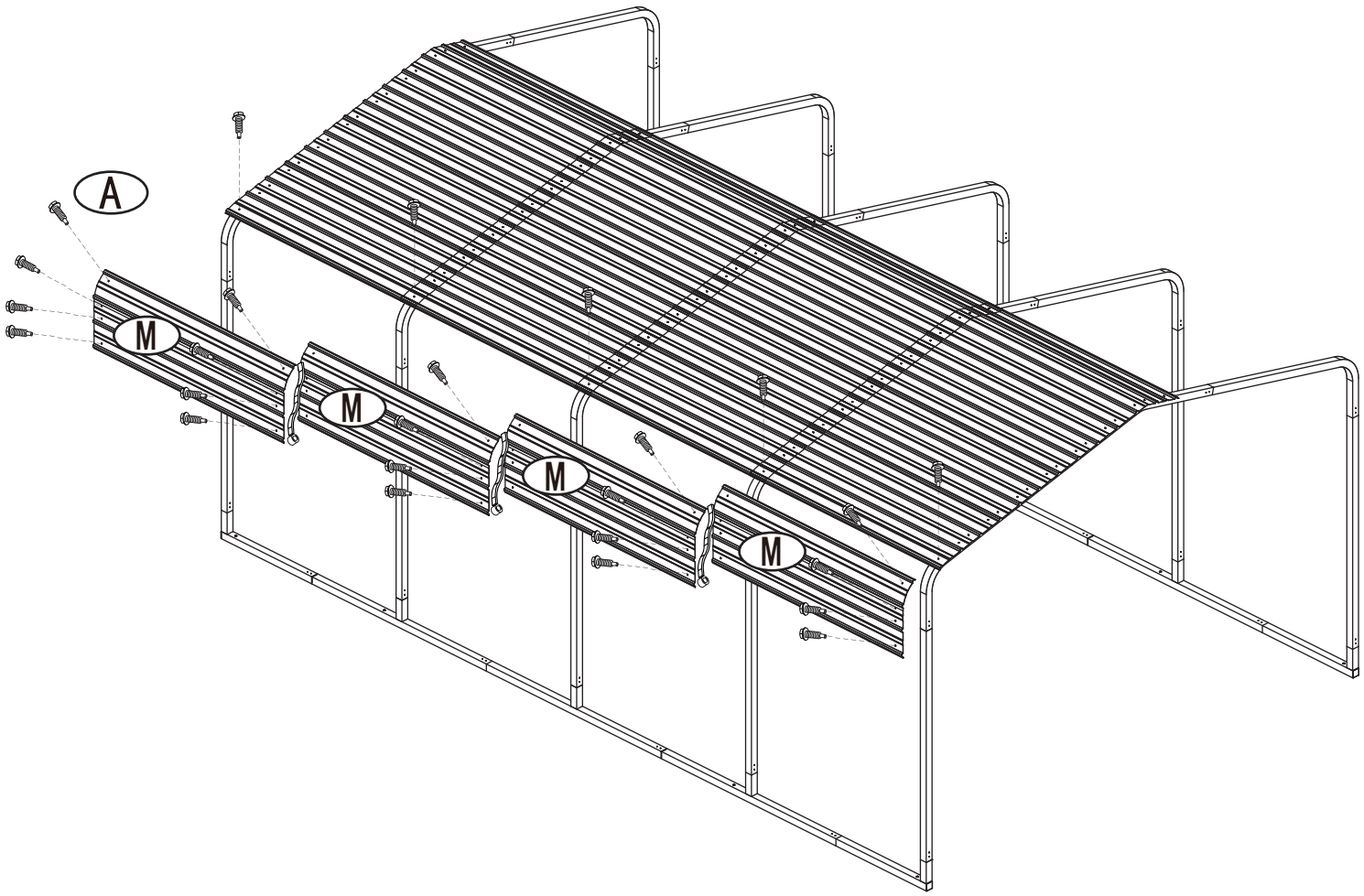

Step11

PART	NO.	Qty.	List.
	M	12	
	A	60	
	D		

Use Part D at the junction of two Part M.
Note: Part D should be close to the edge of Part M,
not too far in to prevent leakage.
If Part D doesn't fill the junction, you can purchase glass glue to fill it completely.

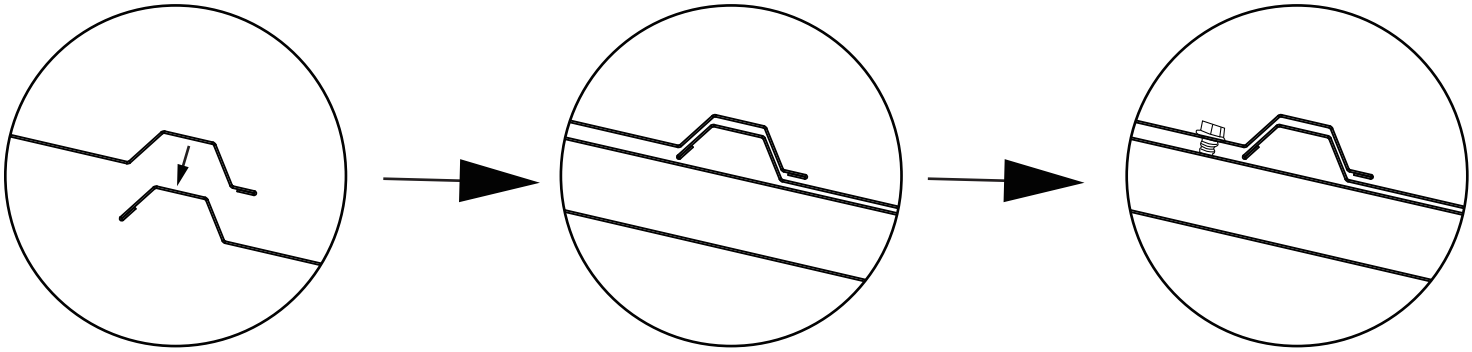

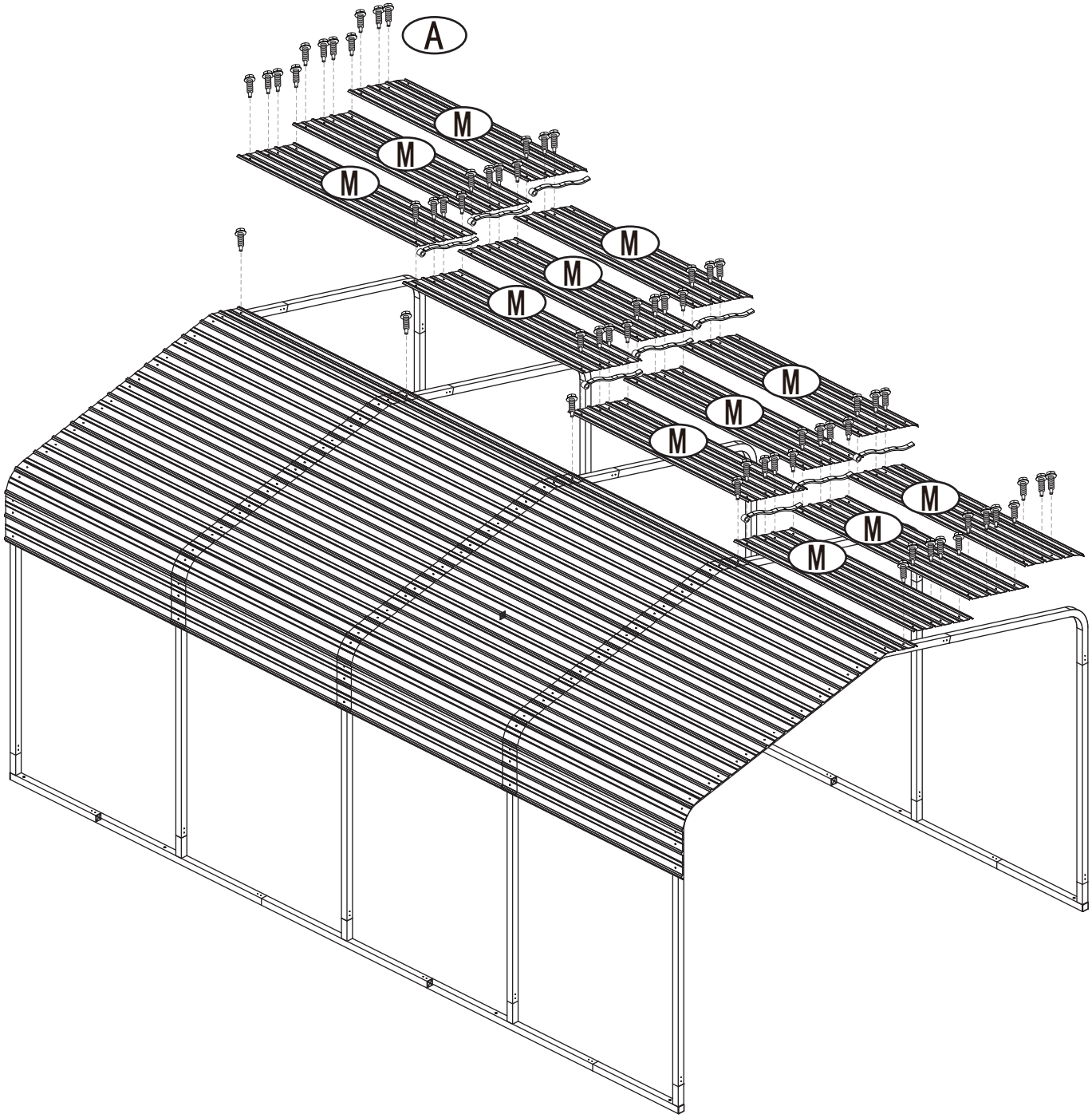

Step12

PART	NO.	Qty.	List.
	M	4	
	A	25	
	D		

Use Part D at the junction of two Part M.
Note: Part D should be close to the edge of Part M,
not too far in to prevent leakage.
If Part D doesn't fill the junction, you can purchase glass glue to fill it completely.

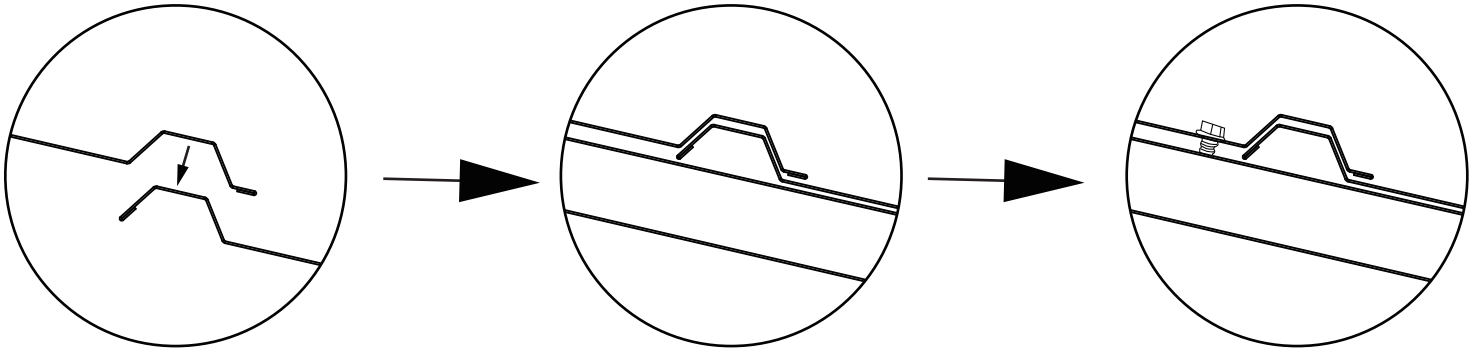

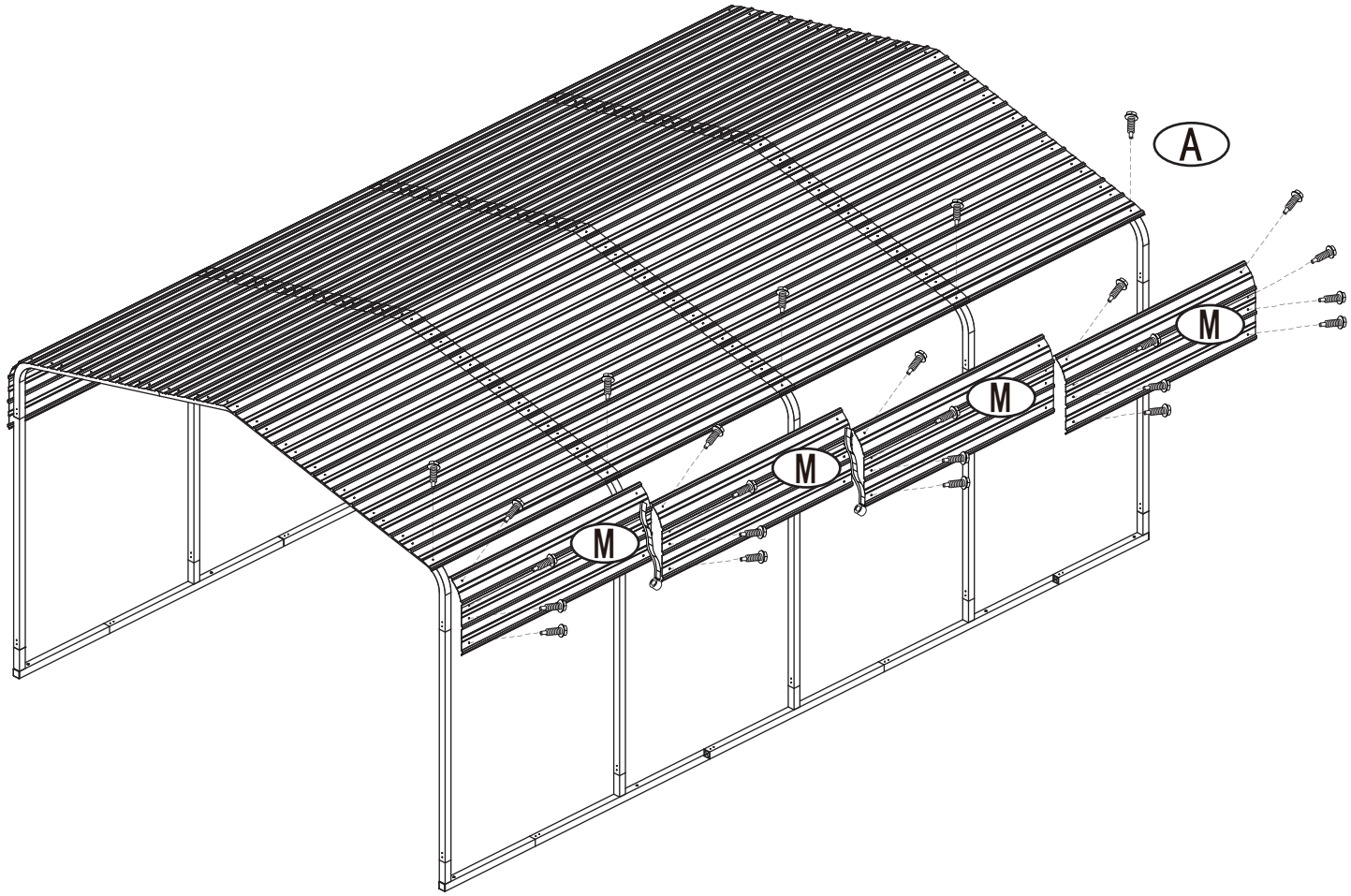

Step13

PART	NO.	Qty.	List.
			

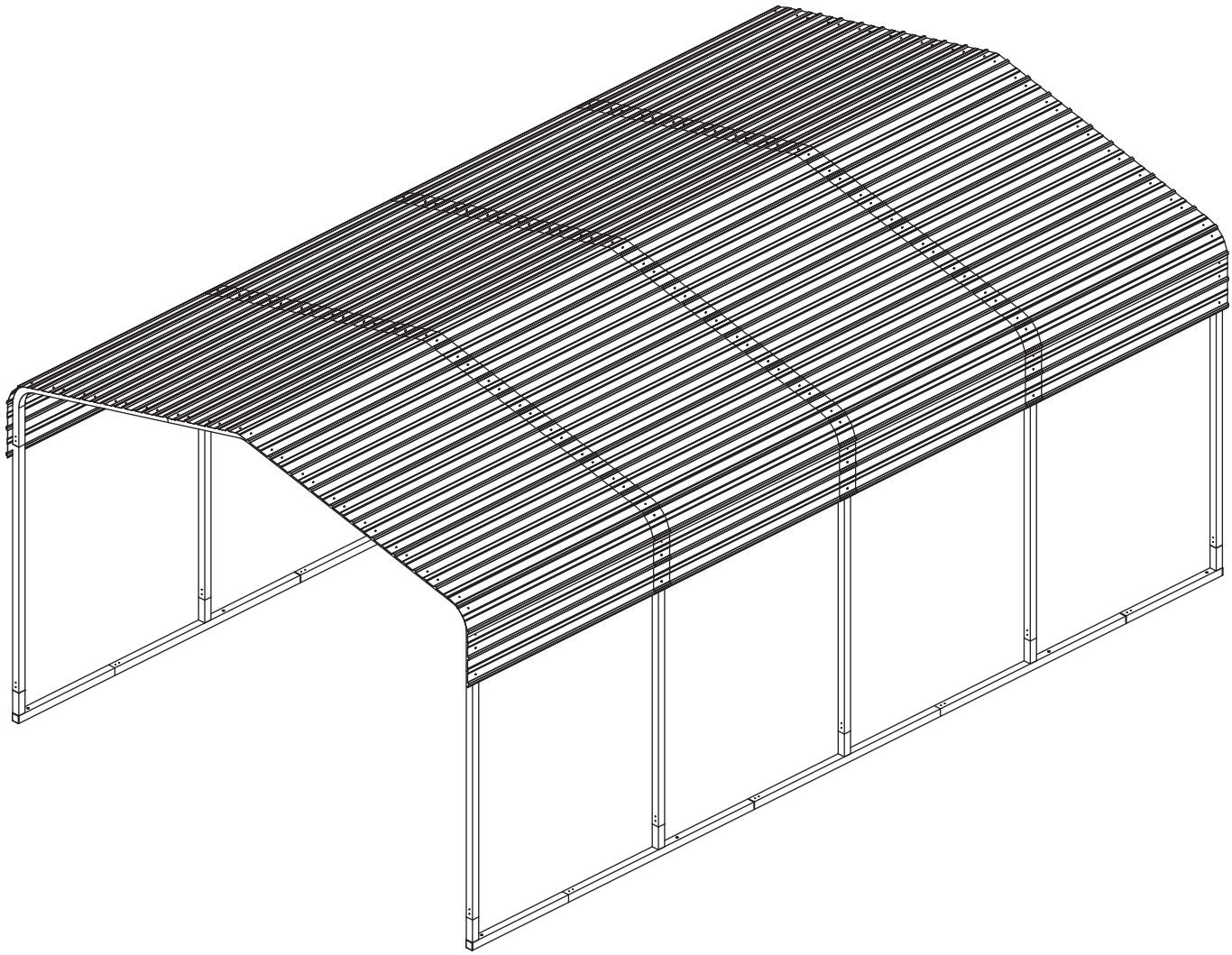

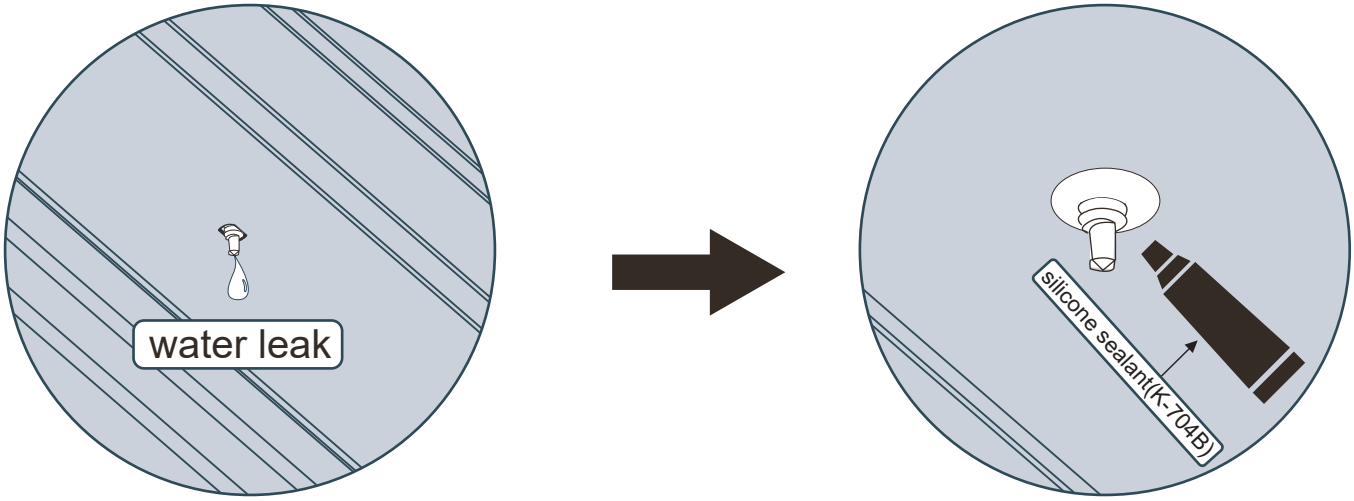

After the carport is assembled, if you notice any leaks on the metal roof, you can use the provided silicone sealant(K-704B) to seal the leaking areas . Note: Apply the silicone sealant(K-704B) on the inside of the carport, and fill it into the screw holes. (For more details, please refer to the enlarged image). Make sure the metal surface is dry and free of water and oil to ensure better adhesion.

Step14

PART	NO.	Qty.	List.
			

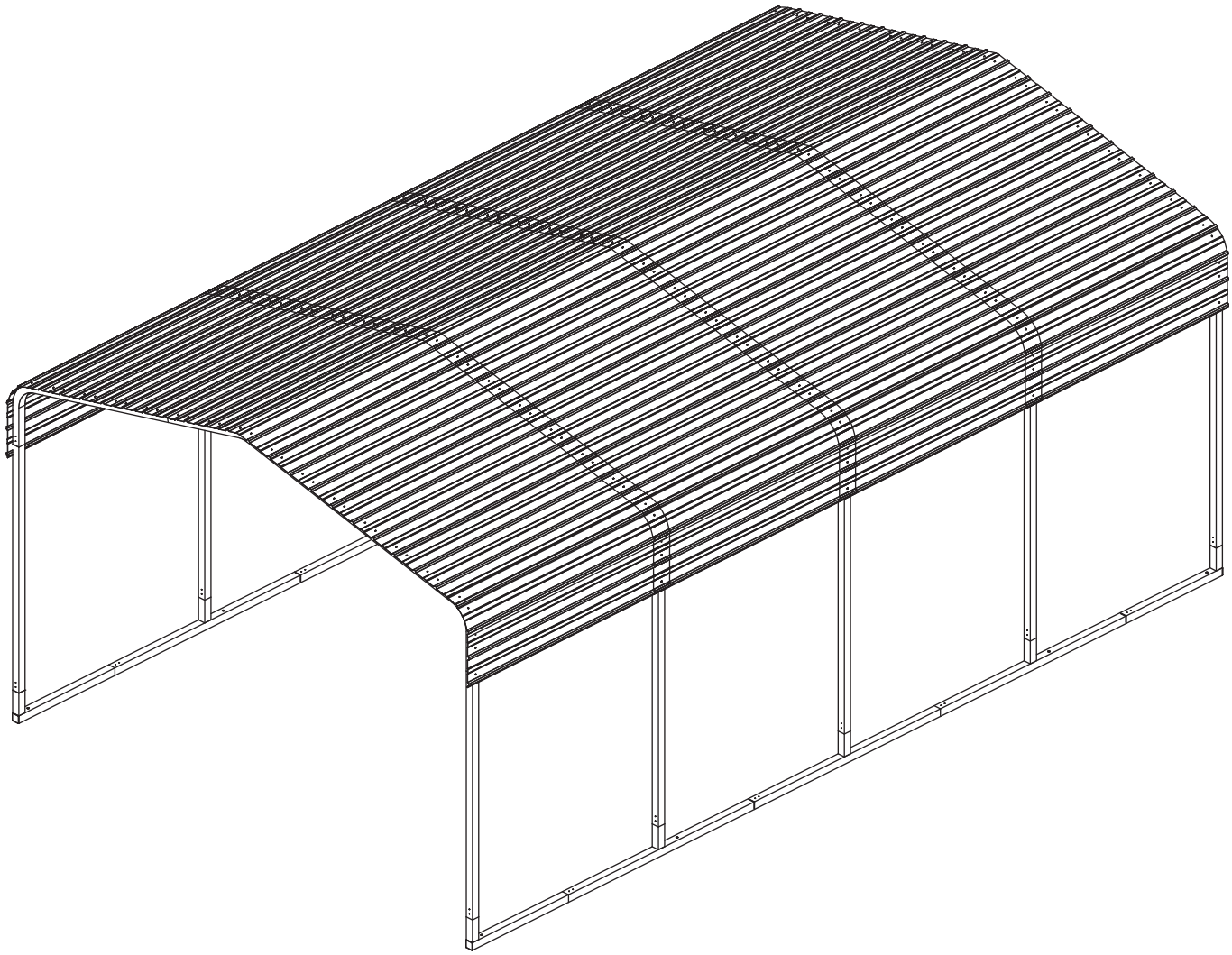

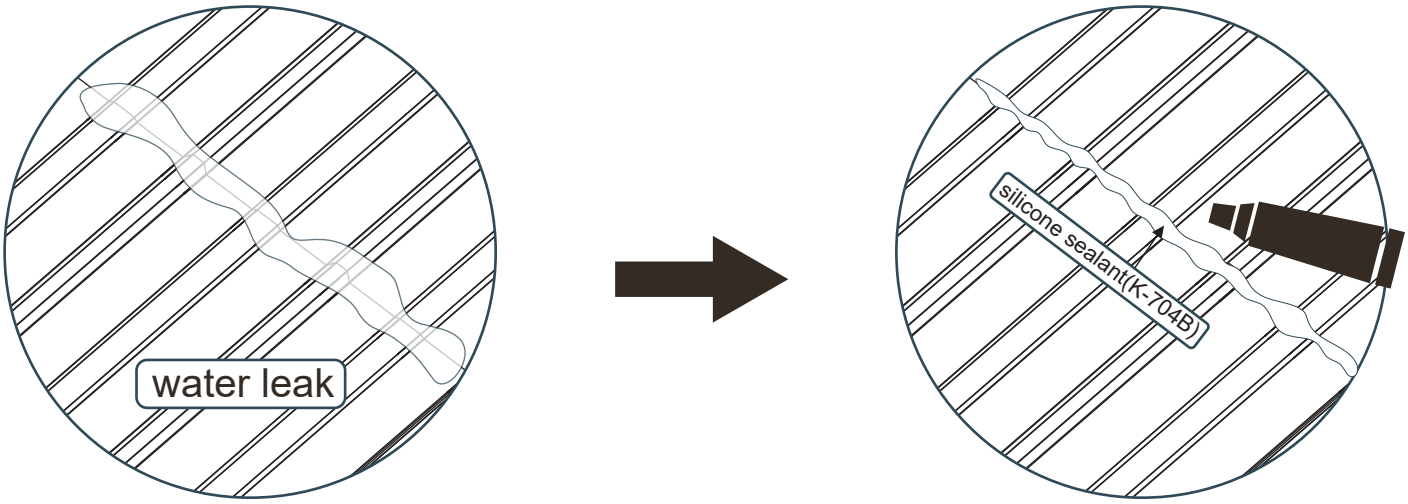

If there is water leakage at the overlap of the iron sheet M, you can use the included silicone sealant (K-704B) to fix it.Note: Apply the silicone sealant(K-704B) on the inside of the carport. (For more details, please refer to the enlarged image). Make sure the metal surface is dry and free of water and oil to ensure better adhesion.

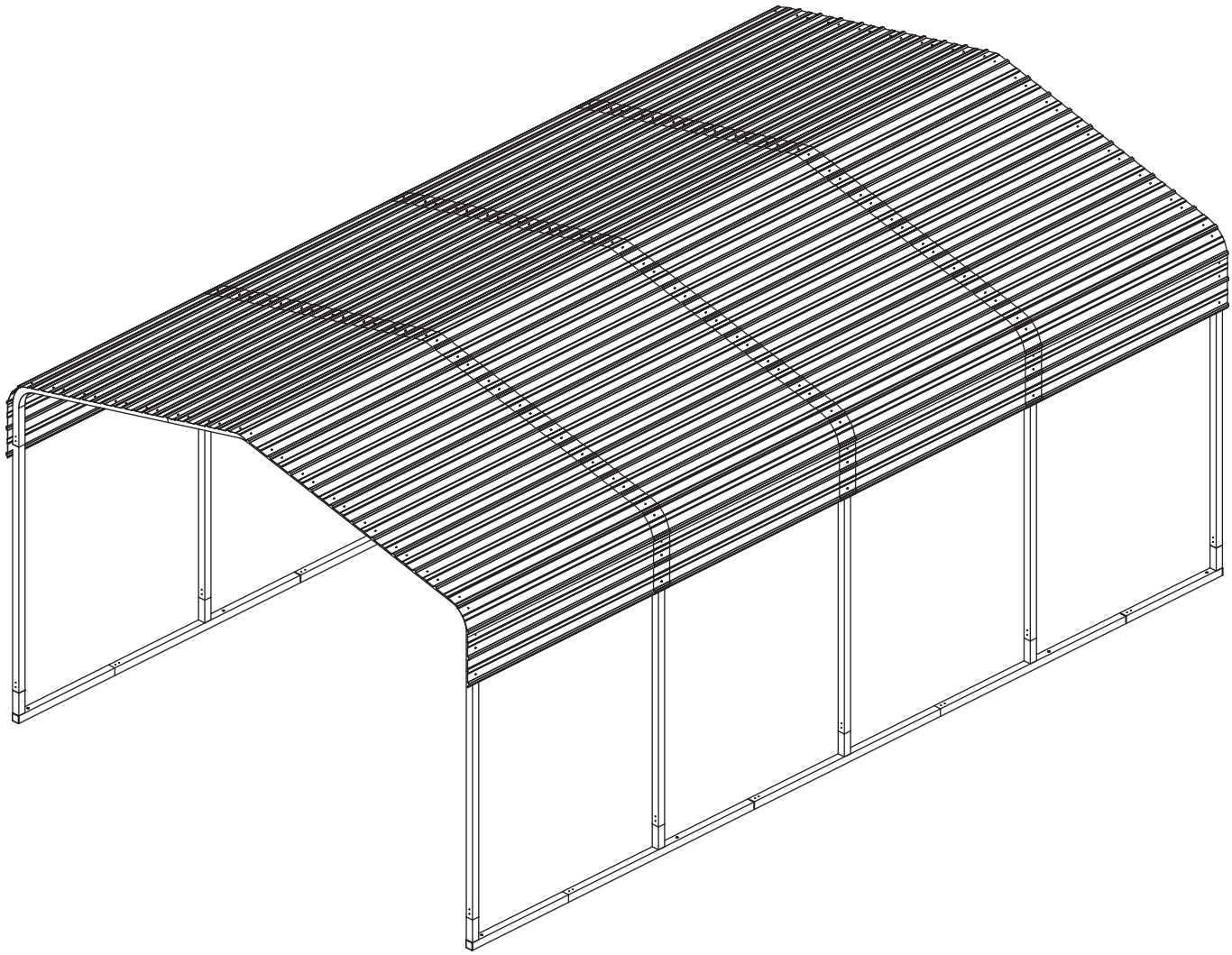

VEIKOUS

For better shopping experience

Please visit our website

WWW.VEIKOUS.COM