PRE-ASSEMBLY STEP 1 - SORTING PARTS

It is critical for ease of assembly that you take the time to sort and organize the wood and hardware.

WOOD PARTS:

- Organize wood parts by the three-digit, alpha-numeric number stamped on each board (ex. P01).
- If there are multiple boards with the same stamped number, stack those pieces together.
- Stamps can be found on the flat surface of the boards or on the end of the boards.
- Allow yourself plenty of room - the wood pieces can take up a significant amount of space.

NOTE: CARTONS ARE NOT ORGANIZED BY BOARD NUMBER.

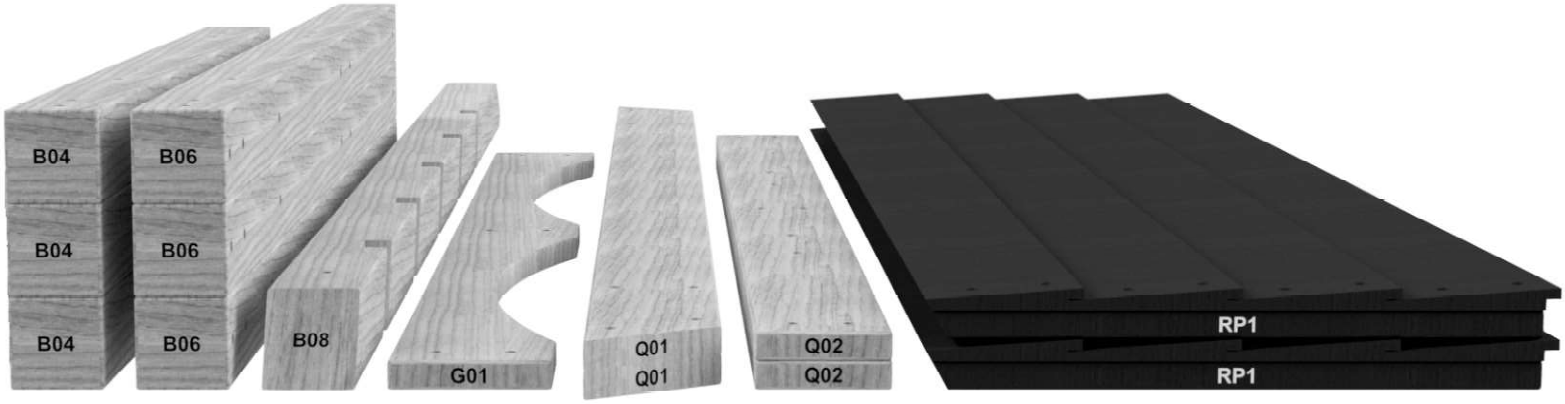

HARDWARE PARTS:

- We recommend that you have a separate table to organize the hardware.
- Hardware bags are printed with a seven-digit, alpha-numeric part number.
- You can organize your hardware by part number or group by hardware type (i.e. bolts, nuts, etc.).
- During assembly you only need to reference the last four digits of the number.

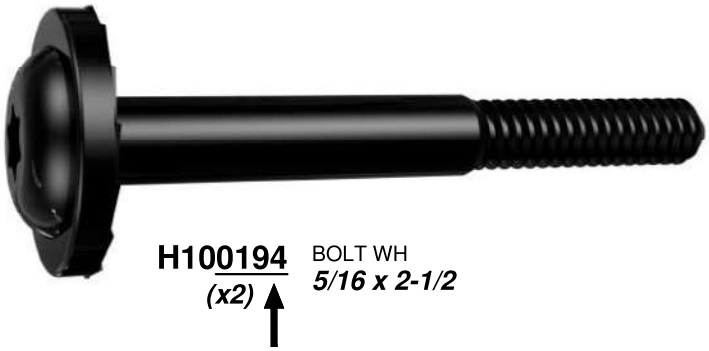

PRE-ASSEMBLY STEP 2 - TOOLS REQUIRED

Cordless Drill or
Electric Drill

Drill Attachments:
Phillips Head

1/8", 3/16", 3/8" & 7/16" Drill Bits

Phillips Screw Driver

Open End Wrenches 1/2" & 9/16"

3/8" Drive Ratchet, 1/2" &
9/16" STD Sockets 1/2" & 9/16" Deep Sockets

Claw Hammer

Rubber Mallet - Optional

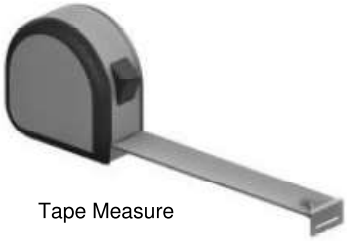

Tape Measure

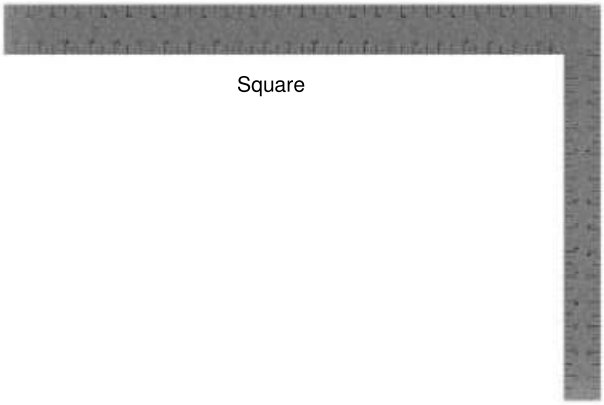

Square

Level 24"

PRE-ASSEMBLY STEP 3 - CHOOSE YOUR ASSEMBLY METHOD

There are several types of assembly instructions available to you.

1. Printed Assembly Manual included with your set
2. BILT APP - 3D interactive instructions
3. Combination of the Printed Manual and BILT APP (Note: Step numbers can differ between the two methods)

STEP 1 - LADDER ASSEMBLY

QTY	PART NUMBER	DESCRIPTION
8	H100391	SCREW PFH 8x2 BLK

H77 **LEFT UPRIGHT - W4L11173**
(x1) *1"x3 3/8"x58" (24x86x1474)*

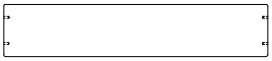

H76 **LADDER RUNG - W4L18505**
(x4) *1"x3 3/8"x17 1/4" (24x86x437)*

TIP:
ALIGN PILOT HOLES

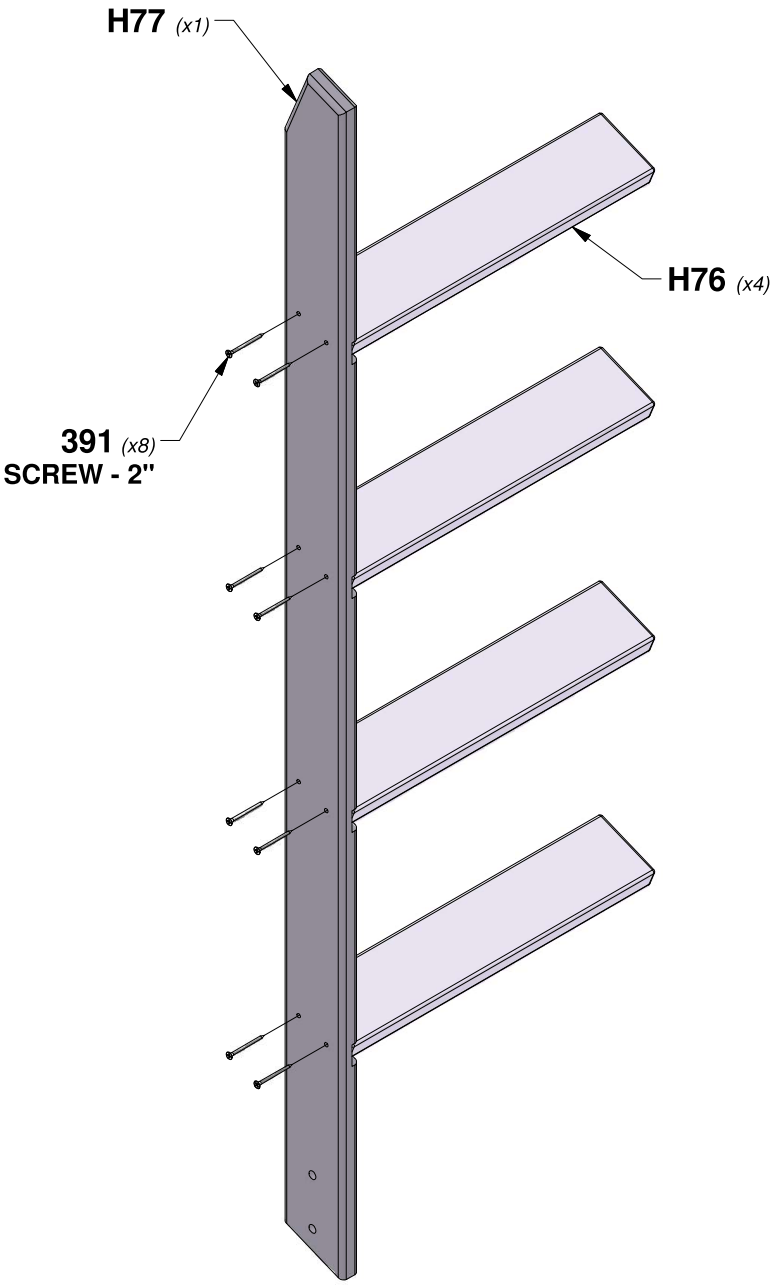

STEP 2 - LADDER ASSEMBLY

QTY	PART NUMBER	DESCRIPTION
8	H100391	SCREW PFH 8x2 BLK

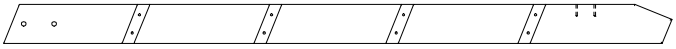

H78 **RIGHT UPRIGHT - W4L11174**
(x1) *1"x3 3/8"x58" (24x86x1474)*

TIP:
ALIGN PILOT HOLES

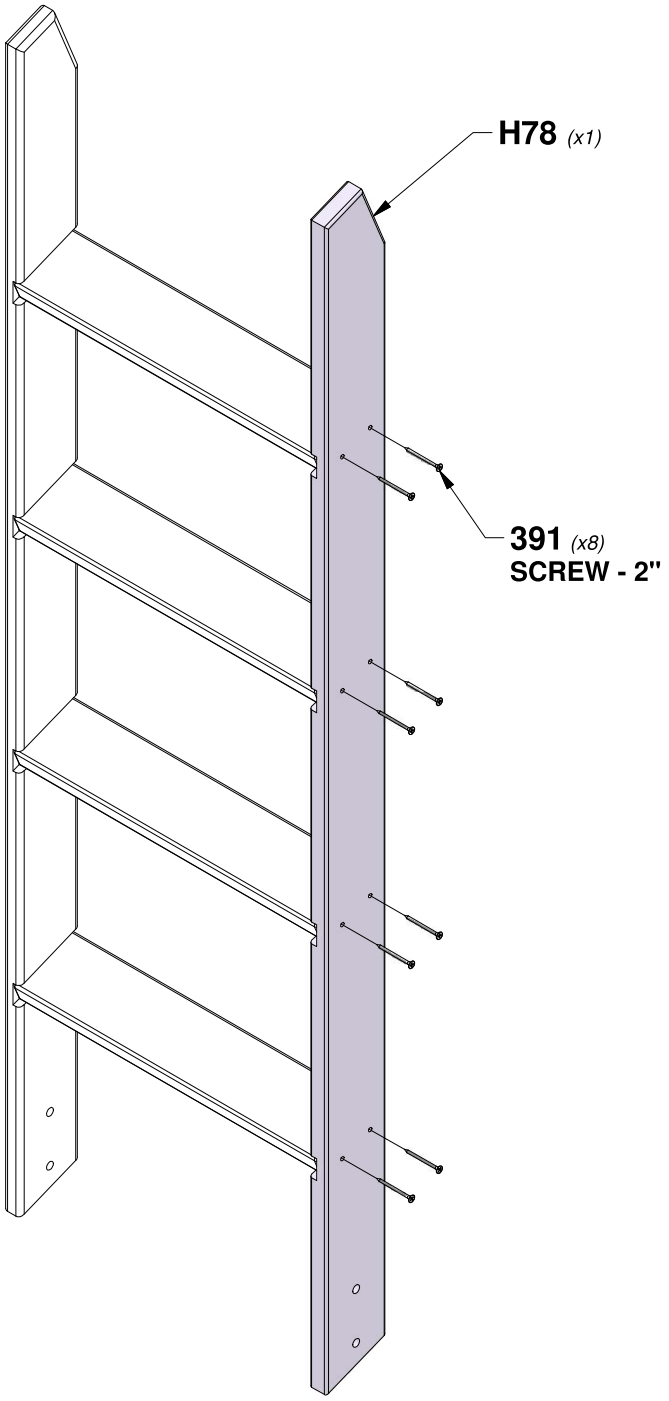

STEP 3 - LADDER ASSEMBLY

QTY	PART NUMBER	DESCRIPTION
4	H100200	SCREW PFH 8x1-1/2 BLK
4	H100391	SCREW PFH 8x2 BLK

H5 **ATTACHMENT BOARD - W4L17639**
(x1) *1"x3 3/8"x18 1/4" (24x86x465)*

M73 **REAR SUPPORT - W4L18504**
(x1) *5/8"x3 3/8"x18 1/4" (16x86x465)*

TIP:
ALIGN PILOT HOLES

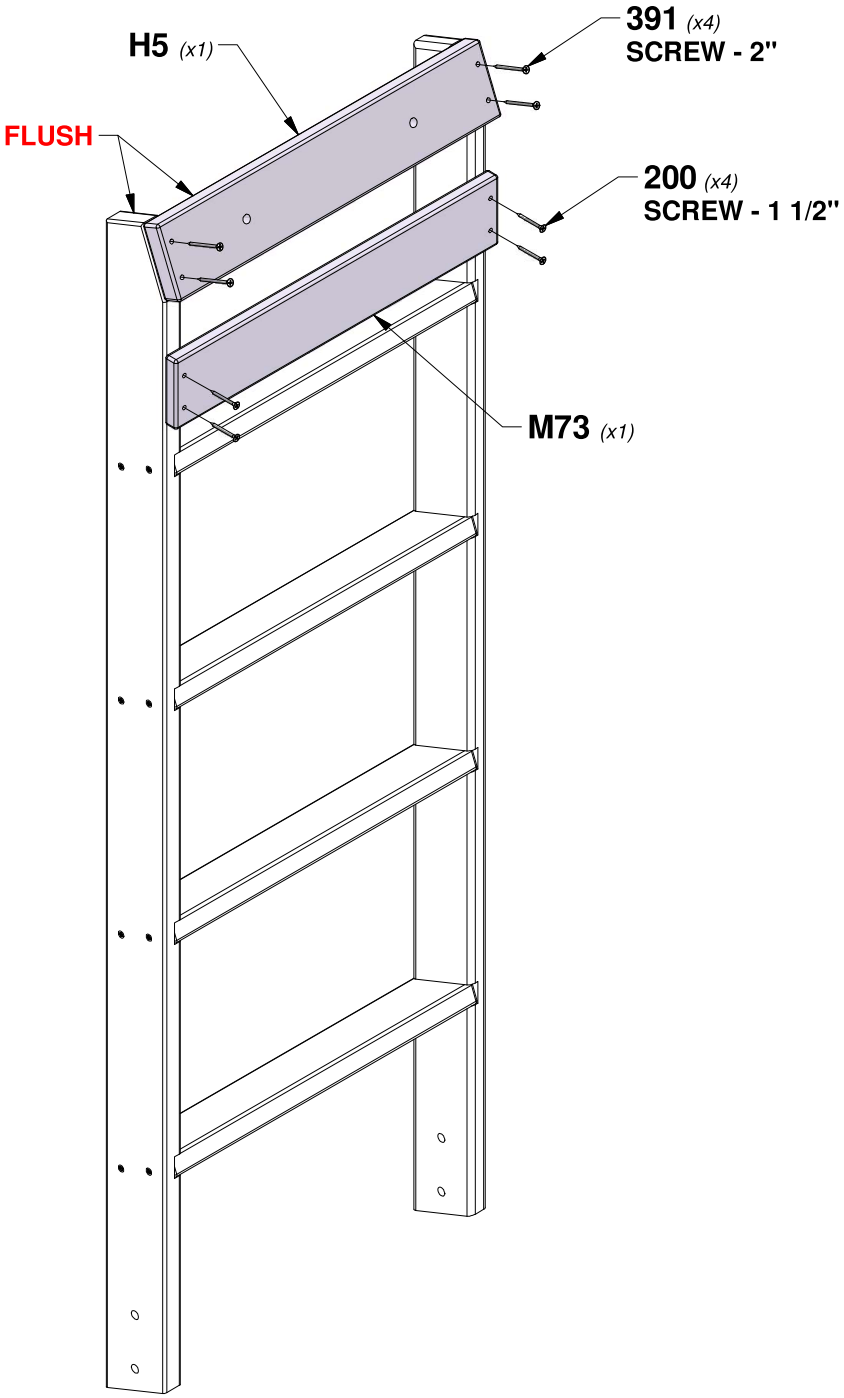

STEP 1 - ROCK WALL ASSEMBLY

QTY	PART NUMBER	DESCRIPTION
24	H100398	T-NUT 1/4 BLK
24	H100473	WASHER LOCK INT 8x15 BLK
24	H101111	BOLT WH 1/4x3/4 BLK

M75 (x4) **ROCK WALL BOARD - W4L18501**
5/8"x3 3/8"x26 1/4" (16x86x667)

M76 (x4) **ROCK WALL BOARD - W4L18502**
5/8"x3 3/8"x26 1/4" (16x86x667)

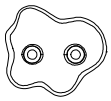

A6P00592 *(x12)* **GREY HC ROCK #1**

TIP:
INSTALL T-NUTS IN WOOD FIRST

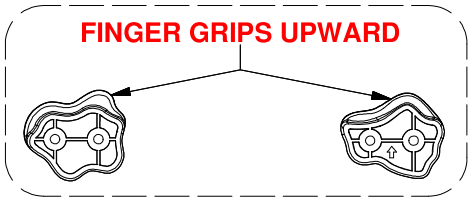

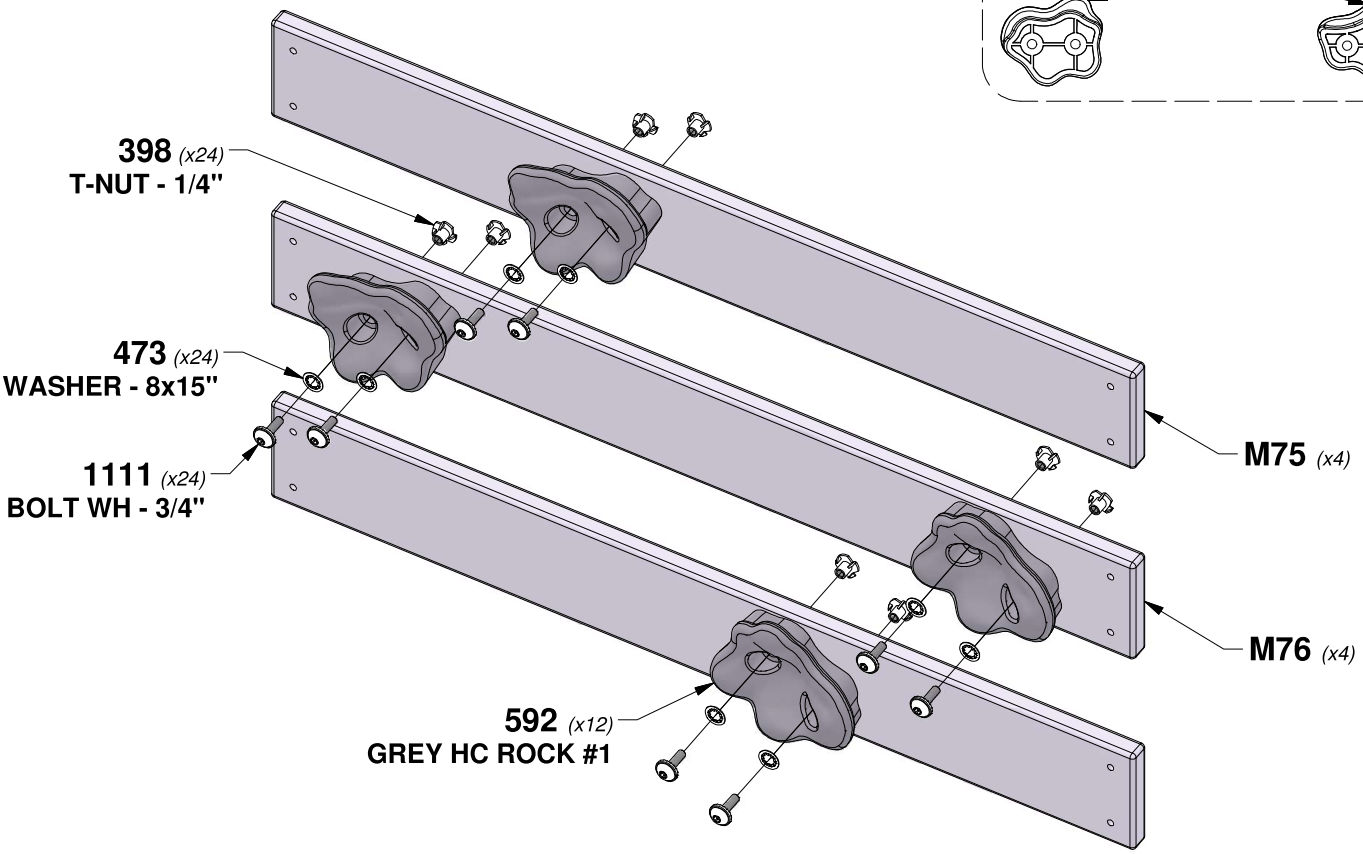

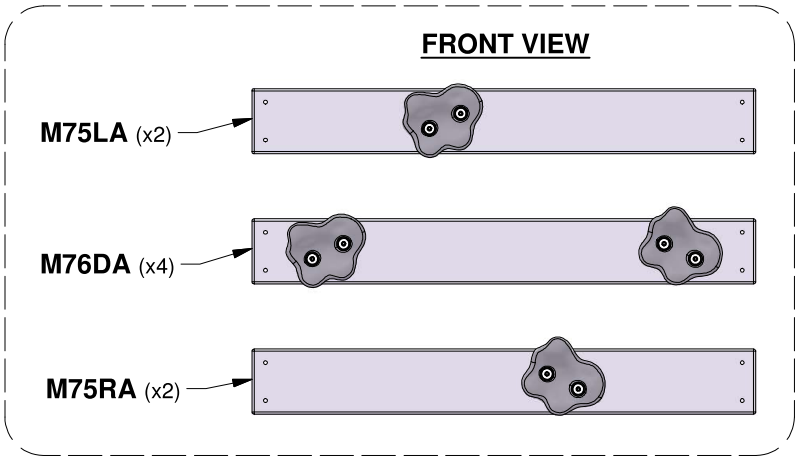

STEP 2 - ROCK WALL ASSEMBLY

QTY	PART NUMBER	DESCRIPTION
64	H100200	SCREW PFH 8x1-1/2 BLK

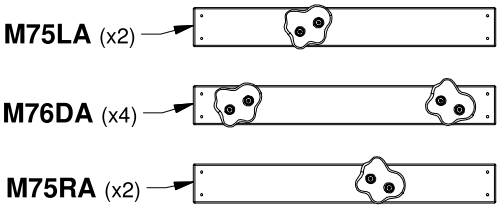

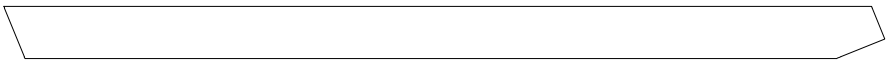

E72 (x2) **RAIL - W4L17808**
1 3/8"x3 3/8"x57 3/8" (36x86x1457)

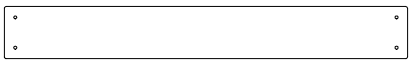

M74 (x7) **ROCK WALL BOARD - W4L18500**
5/8"x3 3/8"x26 1/4" (16x86x667)

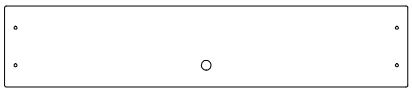

K01 (x1) **ROCK WALL BOARD - W4L18503**
5/8"x5 1/4"x26 1/4" (16x134x667)

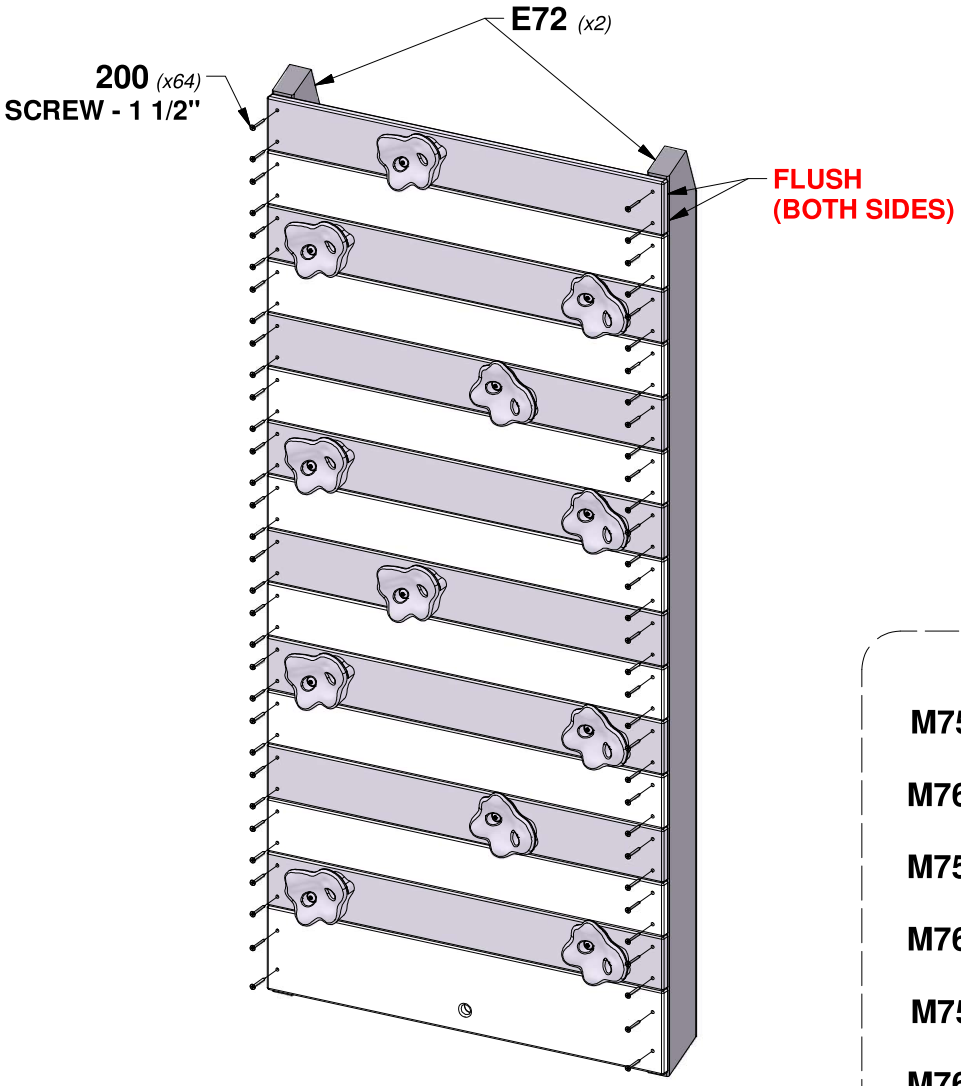

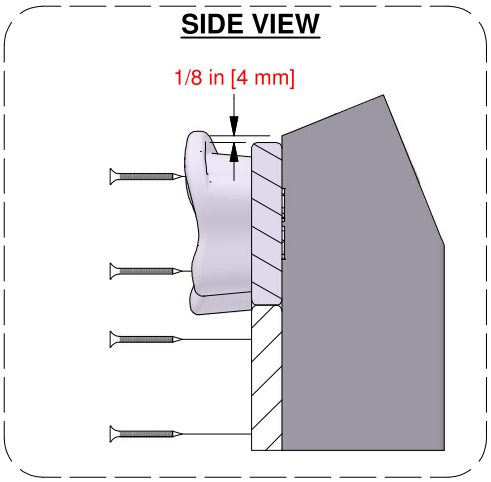

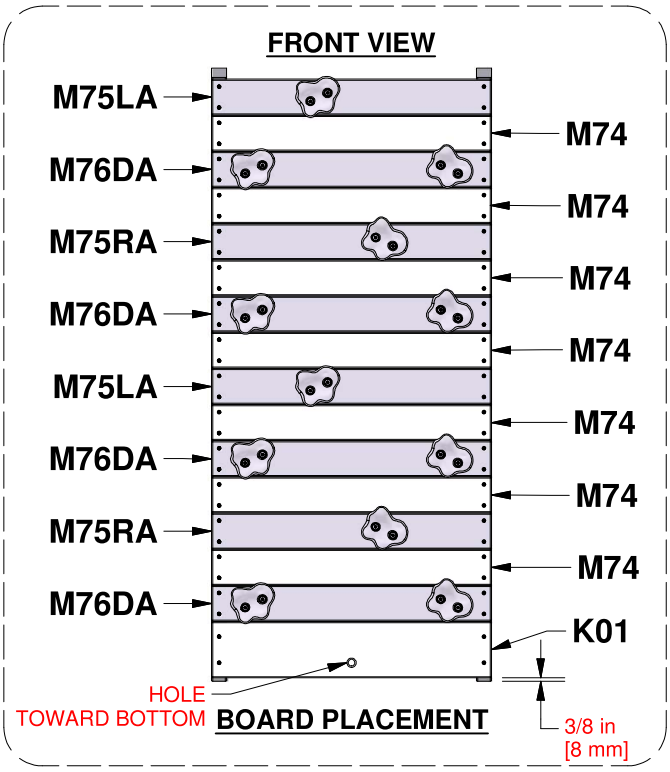

STEP 3 - ROCK WALL ASSEMBLY

QTY	PART NUMBER	DESCRIPTION
2	H100200	SCREW PFH 8x1-1/2 BLK

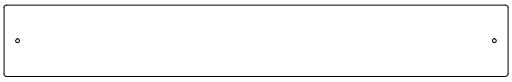

Y1 (x1) **TOP BOARD - W4L17809**
5/8"x3 3/4"x26 1/4" (16x94x667)

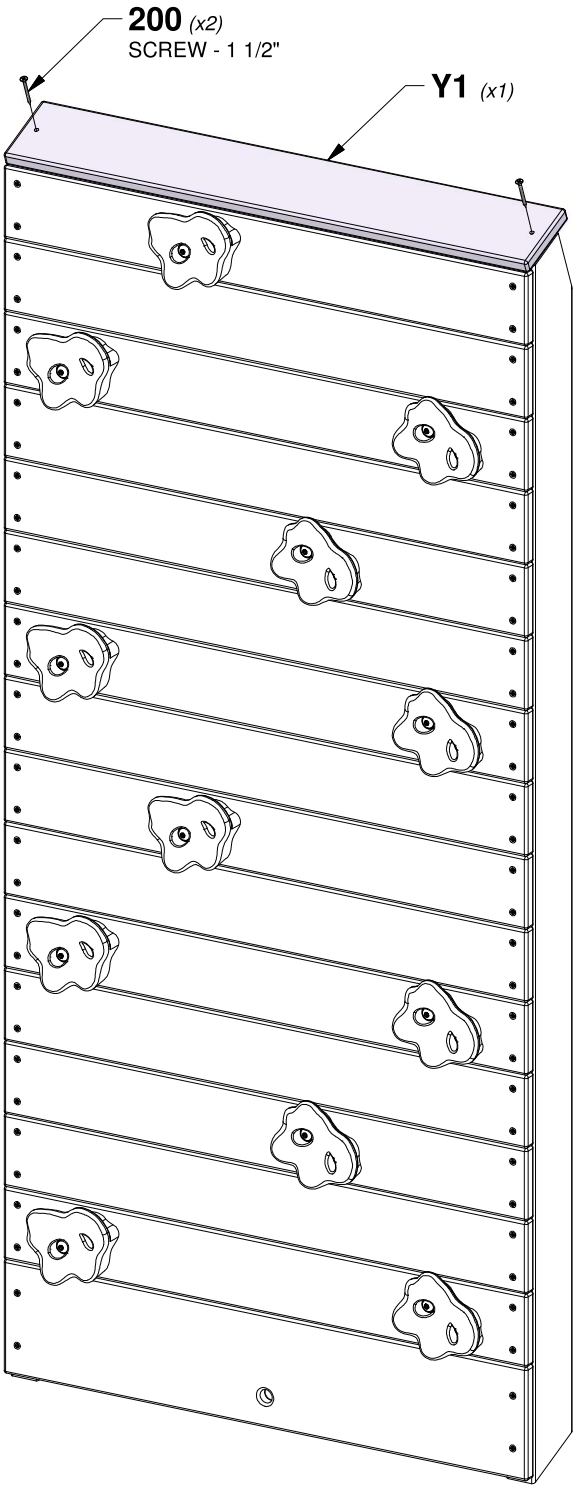

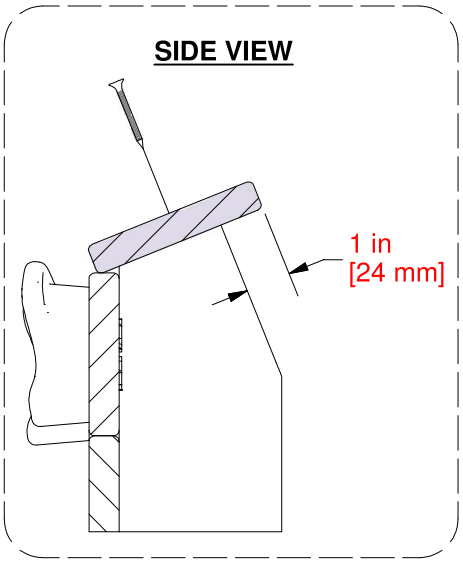

STEP 4 - ROCK WALL ASSEMBLY

QTY	PART NUMBER	DESCRIPTION
4	H100200	SCREW PFH 8x1-1/2 BLK
2	H100379	T-NUT 5/16 BLK

H9 (x1) **ATTACHMENT BOARD - W4L17814**
1"x3 3/8"x26 1/4" (24x86x667)

TIP:
INSTALL T-NUTS IN WOOD FIRST

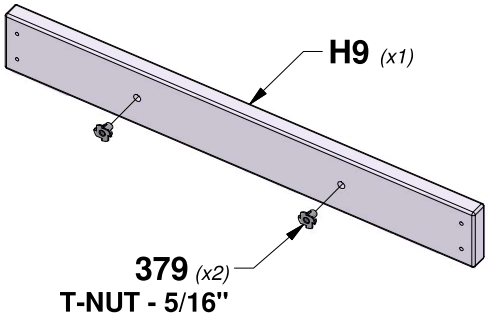

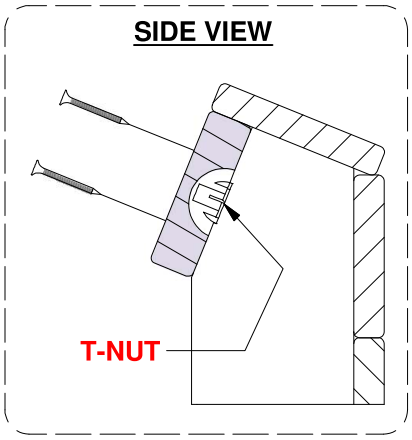

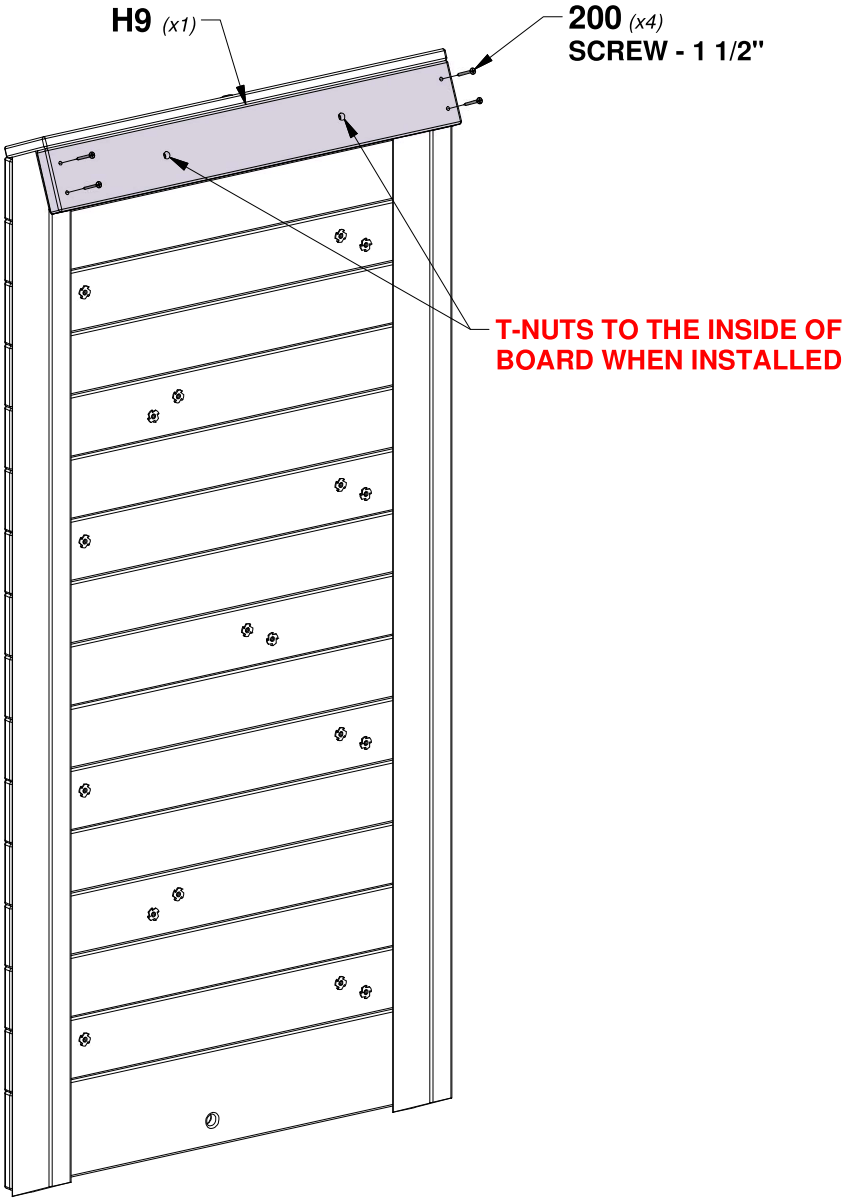

STEP 1 - SWING BEAM ASSEMBLY

QTY	PART NUMBER	DESCRIPTION
10	H100192	NUT BARREL WH 5/16x7/8 BLK
10	H100416	BOLT WH 5/16x3 BLK

A1 (x1) **SWING BEAM EXTENDED - W4L18499**
3 3/8"x5 1/4"x89 1/2" (86x134x2274)

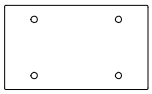

A2 (x1) **SB 9" BLOCK - W4L19017**
3 3/8"x5 1/4"x9" (86x134x228)

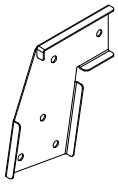

A4M00618 (x1) **SWING BEAM EXTENSION BRACKET-RIGHT**

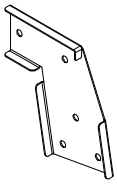

A4M00617 (x1) **SWING BEAM EXTENSION BRACKET-LEFT**

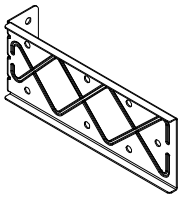

A4M01679 (x2) **EXTENDED SWING BEAM BRACKET**

617 (x1)
SWING BEAM EXTENSION BRACKET-LEFT

618 (x1)
SWING BEAM EXTENSION BRACKET-RIGHT

192 (x10)
NUT BARREL - 7/8"

416 (x10)
BOLT - 3"

A1 (x1)

LEAVE 416 BOLTS (THIS END) HAND TIGHT AT THIS TIME.

A2 (x1)

1679 (x2)
EXTENDED SWING BEAM BRACKET

STEP 2 - SWING BEAM ASSEMBLY

QTY	PART NUMBER	DESCRIPTION
12	H101166	WASHER LOCK INT 10x18 BLK
12	H101167	WASHER FLAT 11x25
12	H101168	T-NUT 3/8 BLK
12	H101170	BOLT HEX 3/8x5-3/4

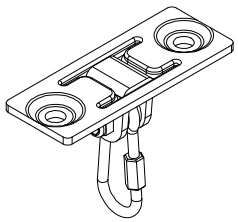

A4M02171 *(x6)* **SWING HANGER**

TIP:
INSTALL T-NUTS IN WOOD FIRST

1168 *(x12)*
T-NUT - 3/8"

2171 *(x6)*
SWING HANGER

1167 *(x12)*
WASHER - 11x25

1166 *(x12)*
WASHER - 10x18

1170 *(x12)*
BOLT - 5 3/4

STEP 3 - SWING BEAM ASSEMBLY

QTY	PART NUMBER	DESCRIPTION
4	H100202	SCREW PWH 8x5/8 BLK

A100164 *(x1)* **BYD ID TAG (LARGE) AGES 3-10**

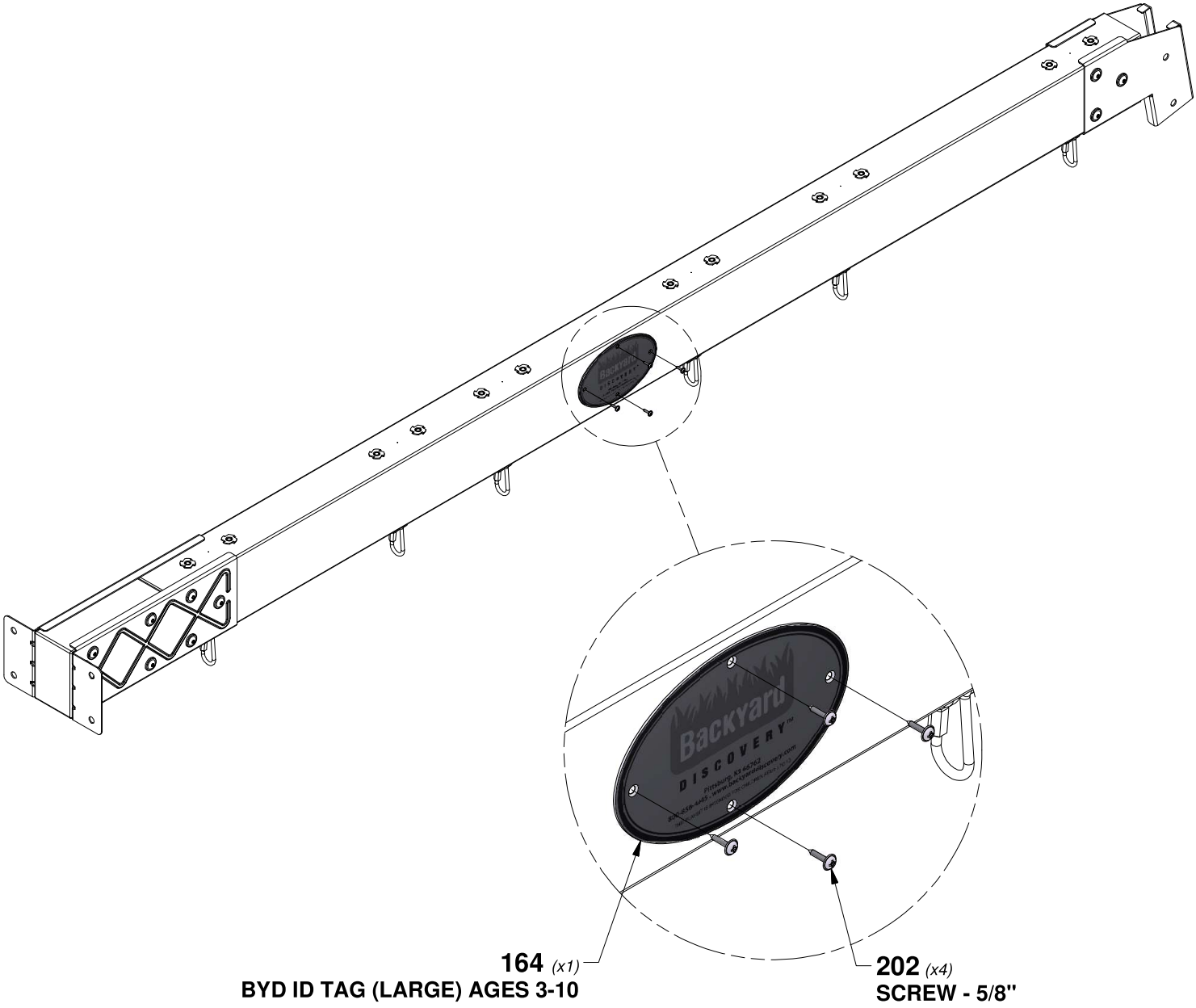

STEP 4 - SWING BEAM ASSEMBLY

QTY	PART NUMBER	DESCRIPTION
6	H100379	T-NUT 5/16 BLK
4	H100407	BOLT WH 5/16x1 1/2 BLK
2	H100503	BOLT WH 5/16x3-1/2 BLK

E77 (x2) **ANGLE BRACE - W4L18495**
1 3/8"x3 3/8"x78" (36x86x1980)

SP71 (x1) **SWING BEAM SUPPORT - W4L18498**
3 3/8"x3 3/8"x49 1/2" (86x86x1256)

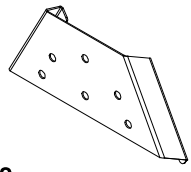

A4M01782 (x1) **A-FRAME BRACKET**

TIP:
INSTALL T-NUTS IN WOOD FIRST

SP71 (x1)

1782 (x1)
A-FRAME BRACKET

379 (x6)
T-NUT - 5/16"

503 (x2)
BOLT - 3 1/2"

407 (x4)
BOLT - 1 1/2"

E77 (x1)

E77 (x1)

STEP 5 - SWING BEAM ASSEMBLY

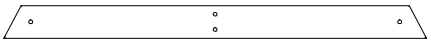

E79 (x1) **END SUPPORT - W4L18496**
1 1/2"x3 1/2"x44" (36x86x1120)

G12 (x1) **GROUND BOARD - W4L18497**
1"x5 1/4"x78 1/8" (24x134x1984)

QTY	PART NUMBER	DESCRIPTION
2	H100195	BOLT WH 5/16x2-3/4 BLK
8	H100198	WASHER LOCK EXT 8x19 BLK
4	H100205	BOLT WH 5/16x2-1/4 BLK
8	H100379	T-NUT 5/16 BLK
2	H100480	BOLT WH 5/16x4 3/4 BLK

TIP:
INSTALL T-NUTS IN WOOD FIRST

E79 *(x1)*

195 *(x2)*
BOLT - 2-3/4

G12 *(x1)*

480 *(x2)*
BOLT - 4 3/4"

379 *(x8)*
T-NUT - 5/16"

205 *(x4)*
BOLT - 2 1/4"

198 *(x8)*
WASHER - 8x19

STEP 6 - SWING BEAM ASSEMBLY

QTY	PART NUMBER	DESCRIPTION
2	H100192	NUT BARREL WH 5/16x7/8 BLK
2	H100416	BOLT WH 5/16x3 BLK

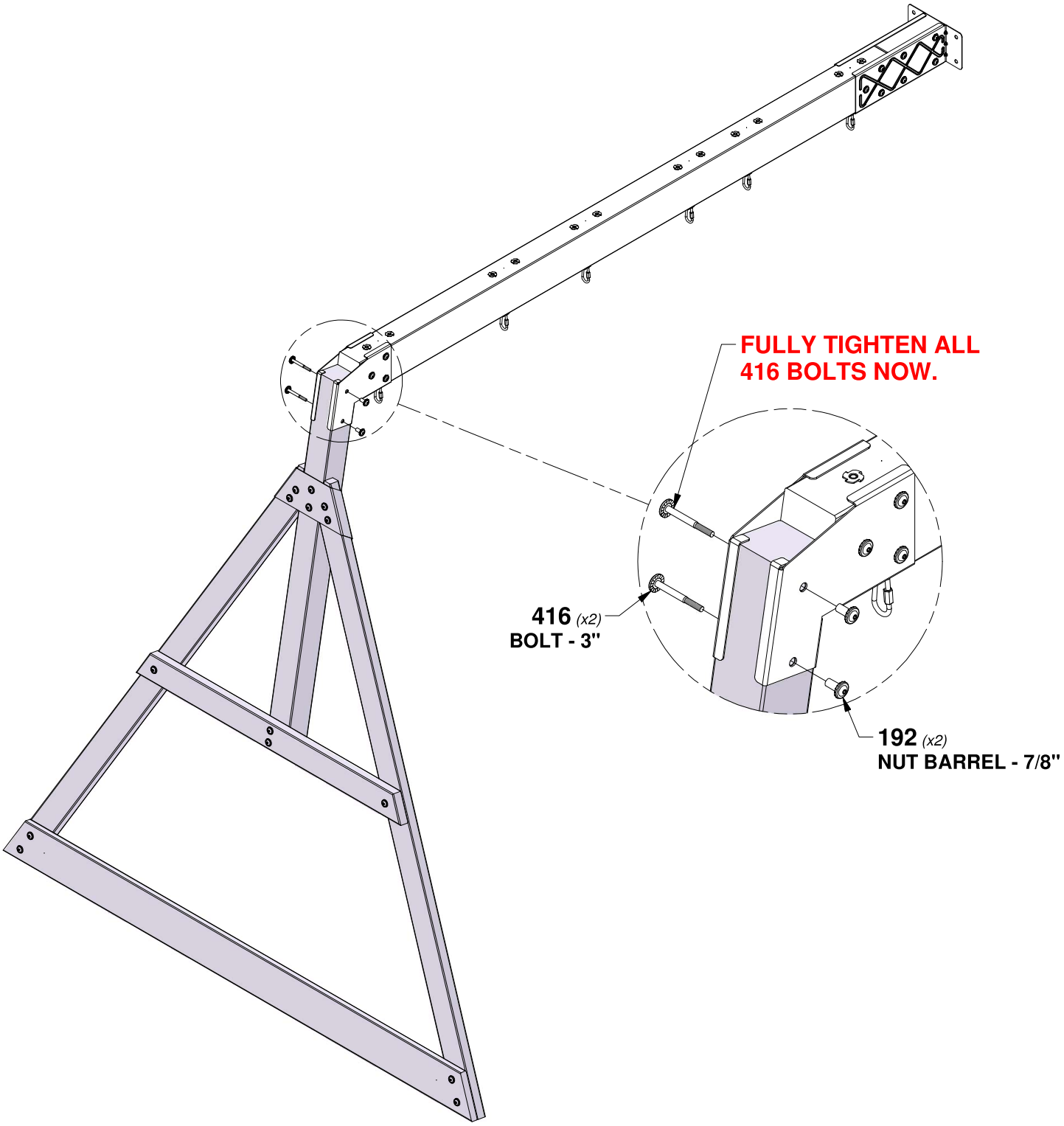

STEP 1 - FORT ASSEMBLY

QTY	PART NUMBER	DESCRIPTION
4	H100195	BOLT WH 5/16x2-3/4 BLK
8	H100198	WASHER LOCK EXT 8x19 BLK
12	H100379	T-NUT 5/16 BLK
4	H100457	BOLT WH 5/16x2 BLK

E7 **RIGHT REAR UPRIGHT - W4L17831**
(x1) *1 3/8"x3 3/8"x43 1/2" (36x86x1104)*

E9 **RIGHT FRONT UPRIGHT - W4L17833**
(x1) *1 3/8"x3 3/8"x43 1/2" (36x86x1104)*

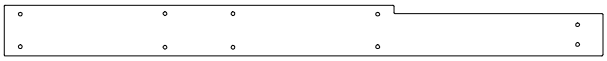

D1 **SWING BEAM MOUNT - W4L19015**
(x1) *1 3/8"x5 1/4"x62 3/8" (36x134x1585)*

K12 **ARCHED WALL RAIL - W4L11143**
(x1) *5/8"x5 1/4"x40 5/8" (16x134x1032)*

TIP:
INSTALL T-NUTS IN WOOD FIRST

NOTE PILOT HOLES THIS SIDE

457 *(x4)* BOLT - 2"

K12 *(x1)*

379 *(x12)* T-NUT - 5/16"

198 *(x8)* WASHER - 8x19

195 *(x4)* BOLT - 2-3/4

NOTE PILOT HOLES THIS SIDE

D1 *(x1)*

E7 *(x1)*

E9 *(x1)*

STEP 2 - FORT ASSEMBLY

QTY	PART NUMBER	DESCRIPTION
6	H100198	WASHER LOCK EXT 8x19 BLK
6	H100205	BOLT WH 5/16x2-1/4 BLK
6	H100379	T-NUT 5/16 BLK

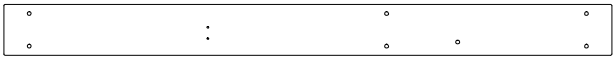

G5 **RIGHT CENTER WALL RAIL - W4L19006**
(x1) *1"x5 1/4"x63 3/8" (24x134x1609)*

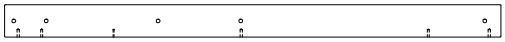

E4 **RIGHT FRONT UPRIGHT - W4L17825**
(x1) *1 3/8"x3 3/8"x51 3/4" (36x86x1314)*

E13 **RIGHT REAR UPRIGHT ASSEMBLY - W2A03847**
(x1) *1 3/8"x3 3/8"x51 3/4" (36x86x1314)*

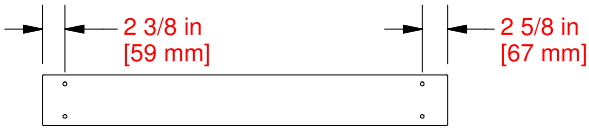

G2 **GROUND BOARD - W4L19003**
(x1) *1"x5 1/4"x42 1/4" (24x134x1072)*

TIP:
INSTALL T-NUTS IN WOOD FIRST

379 *(x6)*
T-NUT - 5/16"

198 *(x6)*
WASHER - 8x19

205 *(x6)*
BOLT - 2 1/4"

G5 *(x1)*

NOTE
LABEL LOCATION

NOTE PILOT
HOLES THIS SIDE

NOTE
HOLE LOCATION

E13 *(x1)*

2 5/8 in
[67 mm]

E4 *(x1)*

NOTE PILOT
HOLES THIS SIDE

G2 *(x1)*

STEP 3 - FORT ASSEMBLY

QTY	PART NUMBER	DESCRIPTION
2	H100198	WASHER LOCK EXT 8x19 BLK
2	H100205	BOLT WH 5/16x2-1/4 BLK
2	H100379	T-NUT 5/16 BLK

TIP:
INSTALL T-NUTS IN WOOD FIRST

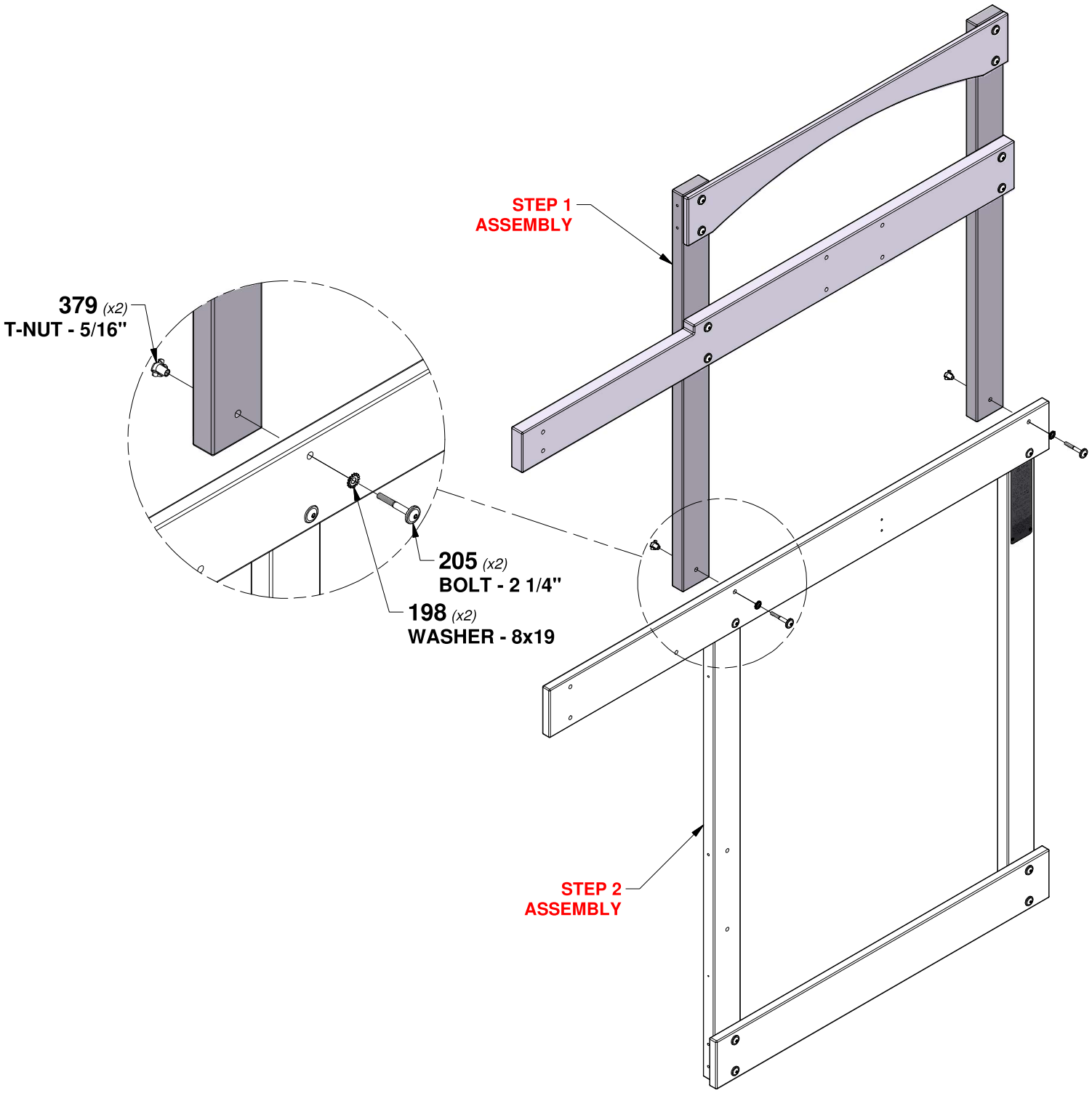

STEP 4 - FORT ASSEMBLY

QTY	PART NUMBER	DESCRIPTION
12	H100198	WASHER LOCK EXT 8x19 BLK
12	H100205	BOLT WH 5/16x2-1/4 BLK
12	H100379	T-NUT 5/16 BLK

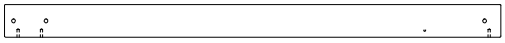

E2 **LEFT REAR UPRIGHT - W4L17823**
(x1) *1 3/8"x3 3/8"x51 3/4" (36x86x1314)*

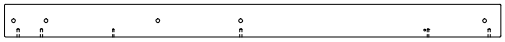

E3 **LEFT FRONT UPRIGHT - W4L17824**
(x1) *1 3/8"x3 3/8"x51 3/4" (36x86x1314)*

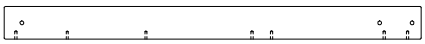

E6 **LEFT REAR UPRIGHT - W4L19001**
(x1) *1 3/8"x3 3/8"x43 1/2" (36x86x1104)*

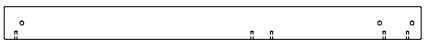

E8 **LEFT FRONT UPRIGHT - W4L19002**
(x1) *1 3/8"x3 3/8"x43 1/2" (36x86x1104)*

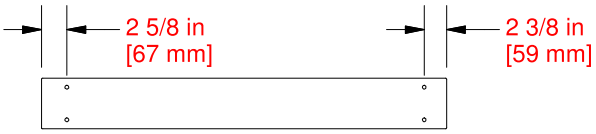

G3 **GROUND BOARD - W4L19004**
(x1) *1"x5 1/4"x42 1/4" (24x134x1072)*

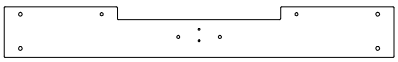

G8 **LEFT CENTER WALL RAIL - W4L19000**
(x1) *1"x5 1/4"x40 5/8" (24x134x1032)*

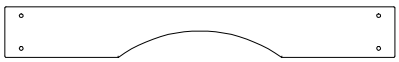

G13 **ARCHED WALL RAIL - W4L19010**
(x1) *1"x5 1/4"x40 5/8" (24x134x1032)*

TIP:
INSTALL T-NUTS IN WOOD FIRST

G13 *(x1)*

E8 *(x1)*

E6 *(x1)*

NOTE PILOT HOLES THIS SIDE

NOTE PILOT HOLES THIS SIDE

G8 *(x1)*

NOTE PILOT HOLE LOCATION

379 *(x12)*
T-NUT - 5/16"

E3 *(x1)*

E2 *(x1)*

2 3/8 in
[59 mm]

198 *(x12)*
WASHER - 8x19

205 *(x12)*
BOLT - 2 1/4"

G3 *(x1)*

STEP 5 - FORT ASSEMBLY

QTY	PART NUMBER	DESCRIPTION
3	H100197	LAG SCREW WH 5/16x2-1/2 BLK
12	H100198	WASHER LOCK EXT 8x19 BLK
2	H100206	LAG SCREW WH 5/16x3 BLK
8	H100458	LAG SCREW WH 5/16x2 BLK

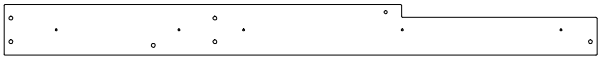

G6 (x1) **FRONT CENTER WALL RAIL - W4L19014**
1"x5 1/4"x61 3/4" (24x134x1570)

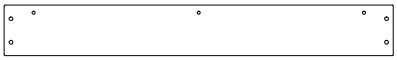

K4 (x1) **GROUND BOARD - W4L19009**
5/8"x5 1/4"x40 1/2" (16x134x1030)

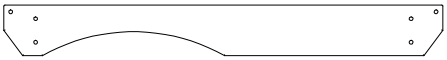

G15 (x1) **ANGLED WALL RAIL - W4L19012**
1"x5 1/4"x45 3/4" (24x134x1162)

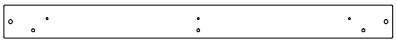

M1 (x1) **WALL RAIL - W4L19013**
5/8"x3 3/8"x40 1/2" (16x86x1030)

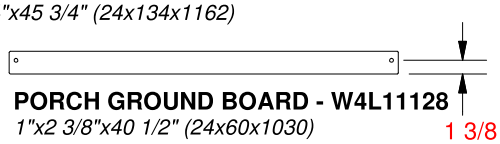

J1 (x1) **PORCH GROUND BOARD - W4L11128**
1"x2 3/8"x40 1/2" (24x60x1030)

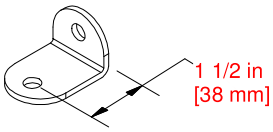

A4M00710 (x1) **L BRACKET BLACK 32x51**

G15 (x1)

458 (x4)
LAG SCREW - 2"

198 (x12)
WASHER - 8x19

G6 (x1)

197 (x3)
LAG SCREW - 2 1/2"

710 (x1)
L BRACKET BLACK 32x51

1 1/2 in
[38 mm]

M1 (x1)

458 (x2)
LAG SCREW - 2"

K4 (x1)

NOTE
HOLES UP

J1 (x1)

458 (x2)
LAG SCREW - 2"

206 (x2)
LAG SCREW - 3"

1 3/8 in
[36 mm]

STEP 6 - FORT ASSEMBLY

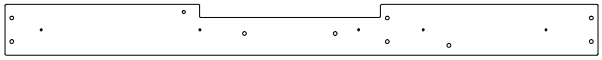

G7 (x1) **REAR CENTER WALL RAIL - W4L19007**
1"x5 1/4"x61 3/4" (24x134x1570)

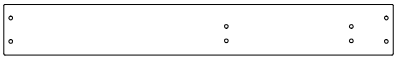

G4 (x1) **GROUND BOARD - W4L19005**
1"x5 1/4"x40 1/2" (24x134x1030)

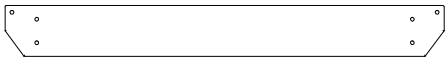

G14 (x1) **ANGLED WALL RAIL - W4L19011**
1"x5 1/4"x45 3/4" (24x134x1162)

QTY	PART NUMBER	DESCRIPTION
8	H100197	LAG SCREW WH 5/16x2-1/2 BLK
12	H100198	WASHER LOCK EXT 8x19 BLK
2	H100379	T-NUT 5/16 BLK
4	H100458	LAG SCREW WH 5/16x2 BLK

TIP:
INSTALL T-NUTS IN WOOD FIRST

198 *(x12)*
WASHER - 8x19

458 *(x4)*
LAG SCREW - 2"

G14 *(x1)*

197 *(x8)*
LAG SCREW - 2 1/2"

G7 *(x1)*

379 *(x2)*
T-NUT - 5/16"

G4 *(x1)*

NOTE HOLE LOCATIONS

STEP 7 - FORT ASSEMBLY

QTY	PART NUMBER	DESCRIPTION
4	H100197	LAG SCREW WH 5/16x2-1/2 BLK
3	H100198	WASHER LOCK EXT 8x19 BLK

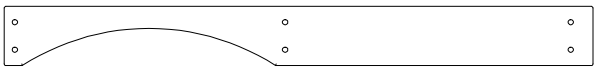

Q6 (x1) **ARCHED WALL RAIL - W4L19016**
1"x4 3/8"x43 7/8" (24x112x1113)

Q4 (x1) **WALL RAIL - W4L17654**
1"x4 3/8"x23 5/8" (24x112x600)

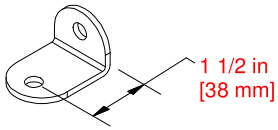

A4M00710 (x1) **L BRACKET BLACK 32x51**

197 *(x4)*
LAG SCREW - 2 1/2"

198 *(x3)*
WASHER - 8x19

Q6 *(x1)*

Q4 *(x1)*

NOTE
HOLES UP

1 1/2 in
[38 mm]

710 *(x1)*
L BRACKET BLACK 32x51

STEP 8 - FORT ASSEMBLY

QTY	PART NUMBER	DESCRIPTION
8	H100197	LAG SCREW WH 5/16x2-1/2 BLK
16	H100198	WASHER LOCK EXT 8x19 BLK
8	H100205	BOLT WH 5/16x2-1/4 BLK
8	H100379	T-NUT 5/16 BLK

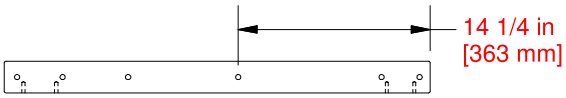

F1 **RIGHT BALCONY UPRIGHT - W4L17806**
(x1) *1 3/8"x2 3/8"x31 3/4" (36x60x805)*

F2 **LEFT BALCONY UPRIGHT - W4L17807**
(x1) *1 3/8"x2 3/8"x31 3/4" (36x60x805)*

PILOT HOLES INWARD WHEN INSTALLED

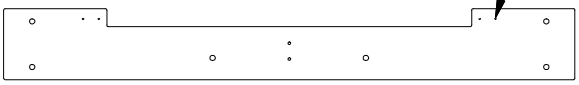

G11 **LEFT SIDE WALL BOARD - W4L19008**
(x1) *1"x5 1/4"x42 1/2" (24x134x1080)*

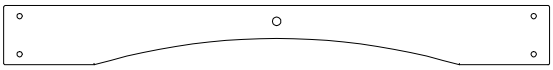

Q1 **ARCHED WALL RAIL - W4L11142**
(x1) *1"x4 3/8"x40 5/8" (24x112x1032)*

TIP:
INSTALL T-NUTS IN WOOD FIRST

197 *(x8)*
LAG SCREW - 2 1/2"

379 *(x8)*
T-NUT - 5/16"

205 *(x8)*
BOLT - 2 1/4"

198 *(x16)*
WASHER - 8x19

Q1 *(x1)*

PILOT HOLES TO OUTSIDE FOR 'F1' & 'F2'

F2 *(x1)*

14 1/4 in
[363 mm]

G11 *(x1)*

F1 *(x1)*

STEP 9 - FORT ASSEMBLY

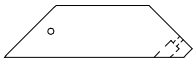

E1 **DECK BRACE - W4L17821**
(x2) *1 3/8"x3 3/8"x12 1/4" (36x86x311)*

QTY	PART NUMBER	DESCRIPTION
2	H100198	WASHER LOCK EXT 8x19 BLK
2	H100205	BOLT WH 5/16x2-1/4 BLK
2	H100379	T-NUT 5/16 BLK
2	H100403	LAG SCREW WH 1/4x1-1/2 BLK
2	H100405	WASHER LOCK EXT 6x15 BLK

TIP:
INSTALL T-NUTS IN WOOD FIRST

198 *(x2)*
WASHER - 8x19
205 *(x2)*
BOLT - 2 1/4"
379 *(x2)*
T-NUT - 5/16"
403 *(x2)*
LAG SCREW - 1 1/2"
405 *(x2)*
WASHER - 6x15
E1 *(x2)*

STEP 10 - FORT ASSEMBLY

QTY	PART NUMBER	DESCRIPTION
2	H100192	NUT BARREL WH 5/16x7/8 BLK
2	H100199	WASHER LOCK EXT 12x19 BLK
4	H100382	SCREW PFH 8x1 3/4 BLK
2	H100396	BOLT WH 5/16x1/2 BLK

J10 (x2) **PORCH GROUND BOARD - W4L17650**
1"x2 3/8"x21 1/8" (24x60x537)

G9 (x1) **LEFT BALCONY WALL RAIL - W4L17648**
1"x5 1/4"x20 3/4" (24x134x528)

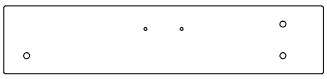

Q5 (x1) **WALL RAIL - W4L17655**
1"x4 3/8"x20 7/8" (24x112x529)

396 (x2)
BOLT - 1/2"

192 (x2)
NUT BARREL - 7/8"

199 (x2)
WASHER - 12x19

Q5 (x1)

G9 (x1)

FLUSH

382 (x4)
SCREW - 1 3/4"

J10 (x2)

STEP 11 - FORT ASSEMBLY

E5 (x1) **RIGHT FRONT BALCONY UPRIGHT - W4L17826**
1 3/8"x3 3/8"x80 3/4" (36x86x2052)

E11 (x1) **RIGHT FRONT BALCONY UPRIGHT - W4L17827**
1 3/8"x3 3/8"x80 3/4" (36x86x2052)

QTY	PART NUMBER	DESCRIPTION
2	H100195	BOLT WH 5/16x2-3/4 BLK
10	H100198	WASHER LOCK EXT 8x19 BLK
8	H100205	BOLT WH 5/16x2-1/4 BLK
10	H100379	T-NUT 5/16 BLK

TIP:
INSTALL T-NUTS IN WOOD FIRST

198 *(x10)*
WASHER - 8x19

195 *(x2)*
BOLT - 2-3/4

379 *(x10)*
T-NUT - 5/16"

205 *(x8)*
BOLT - 2 1/4"

PILOT HOLES
THIS SIDE
FOR 'E5' & 'E11'

E11 *(x1)*

E5 *(x1)*

STEP 12 - FORT ASSEMBLY

QTY	PART NUMBER	DESCRIPTION
8	H100197	LAG SCREW WH 5/16x2-1/2 BLK
10	H100198	WASHER LOCK EXT 8x19 BLK
2	H100458	LAG SCREW WH 5/16x2 BLK

Q3 **ARCHED WALL RAIL - W4L17653**
(x1) *1"x4 3/8"x40 5/8" (24x112x1032)*

PILOT HOLES INWARD WHEN INSTALLED

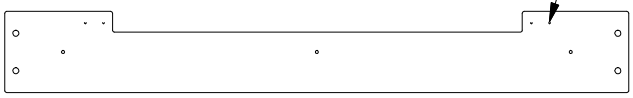

G10 **FRONT BALCONY WALL RAIL - W4L17649**
(x1) *1"x5 1/4"x40 5/8" (24x134x1032)*

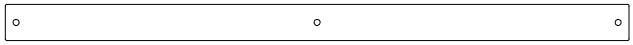

J2 **PORCH GROUND BOARD - W4L11129**
(x1) *1"x2 3/8"x40 5/8" (24x60x1032)*

Q3 *(x1)*

G10 *(x1)*

198 *(x10)*
WASHER - 8x19

197 *(x8)*
LAG SCREW - 2 1/2"

458 *(x2)*
LAG SCREW - 2"

J2 *(x1)*

STEP 13 - FORT ASSEMBLY

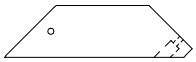

E1 **DECK BRACE - W4L17821**
(x2) *1 3/8"x3 3/8"x12 1/4" (36x86x311)*

QTY	PART NUMBER	DESCRIPTION
2	H100198	WASHER LOCK EXT 8x19 BLK
2	H100205	BOLT WH 5/16x2-1/4 BLK
2	H100379	T-NUT 5/16 BLK
2	H100403	LAG SCREW WH 1/4x1-1/2 BLK
2	H100405	WASHER LOCK EXT 6x15 BLK

TIP:
INSTALL T-NUTS IN WOOD FIRST

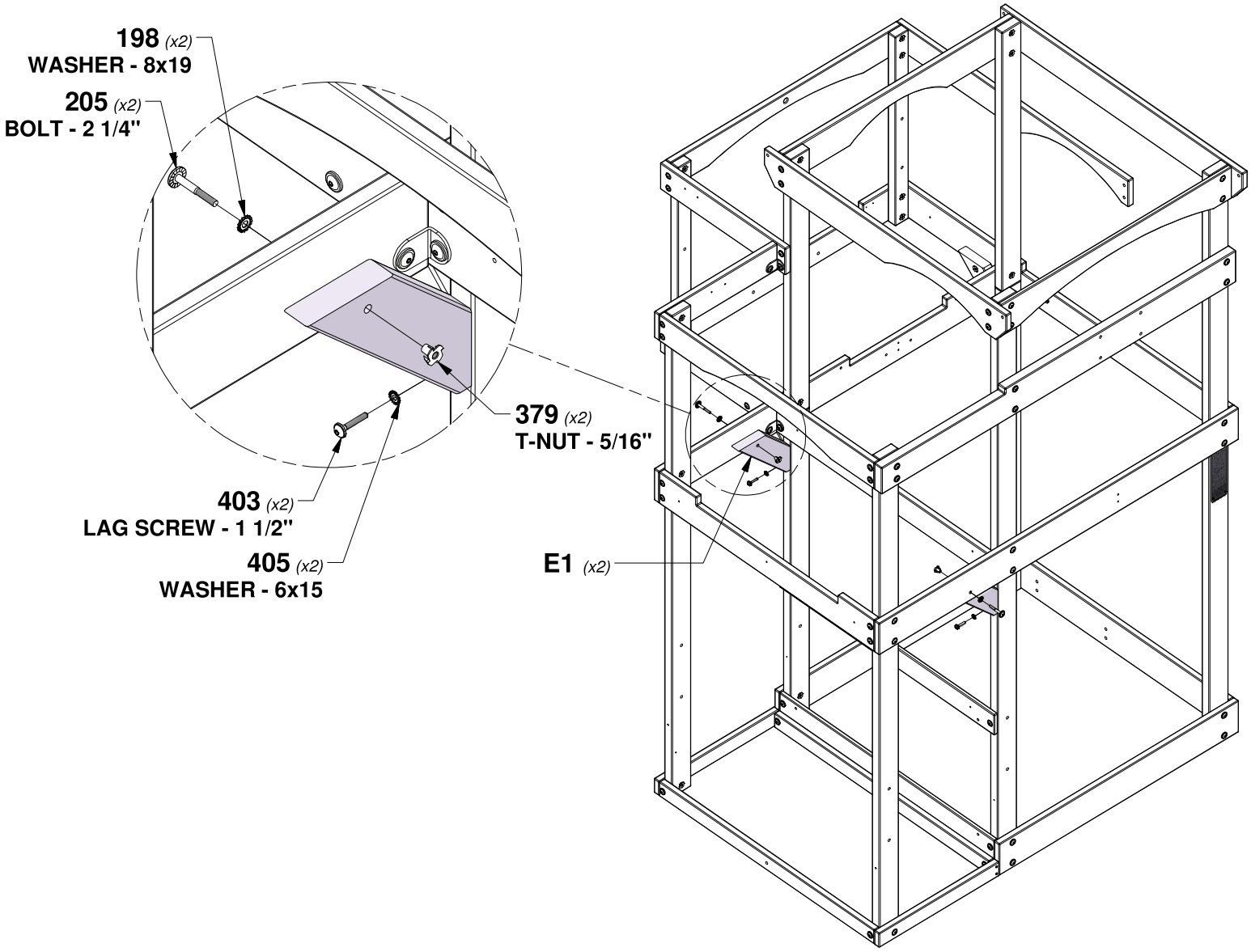

STEP 14 - FORT ASSEMBLY

QTY	PART NUMBER	DESCRIPTION
4	H100201	SCREW PFH 8x2-1/2 BLK
6	H100382	SCREW PFH 8x1 3/4 BLK

F06 **FLOOR JOIST - W4L18510**
(x1) *1 3/8"x2"x40 1/2" (36x50x1030)*

T01 **SUPPORT BOARD - W4L18507**
(x2) *1"x1 3/8"x37 5/8" (24x34x957)*

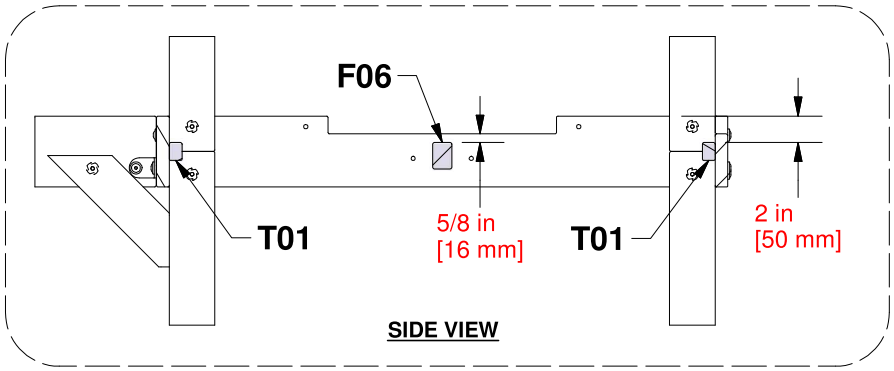

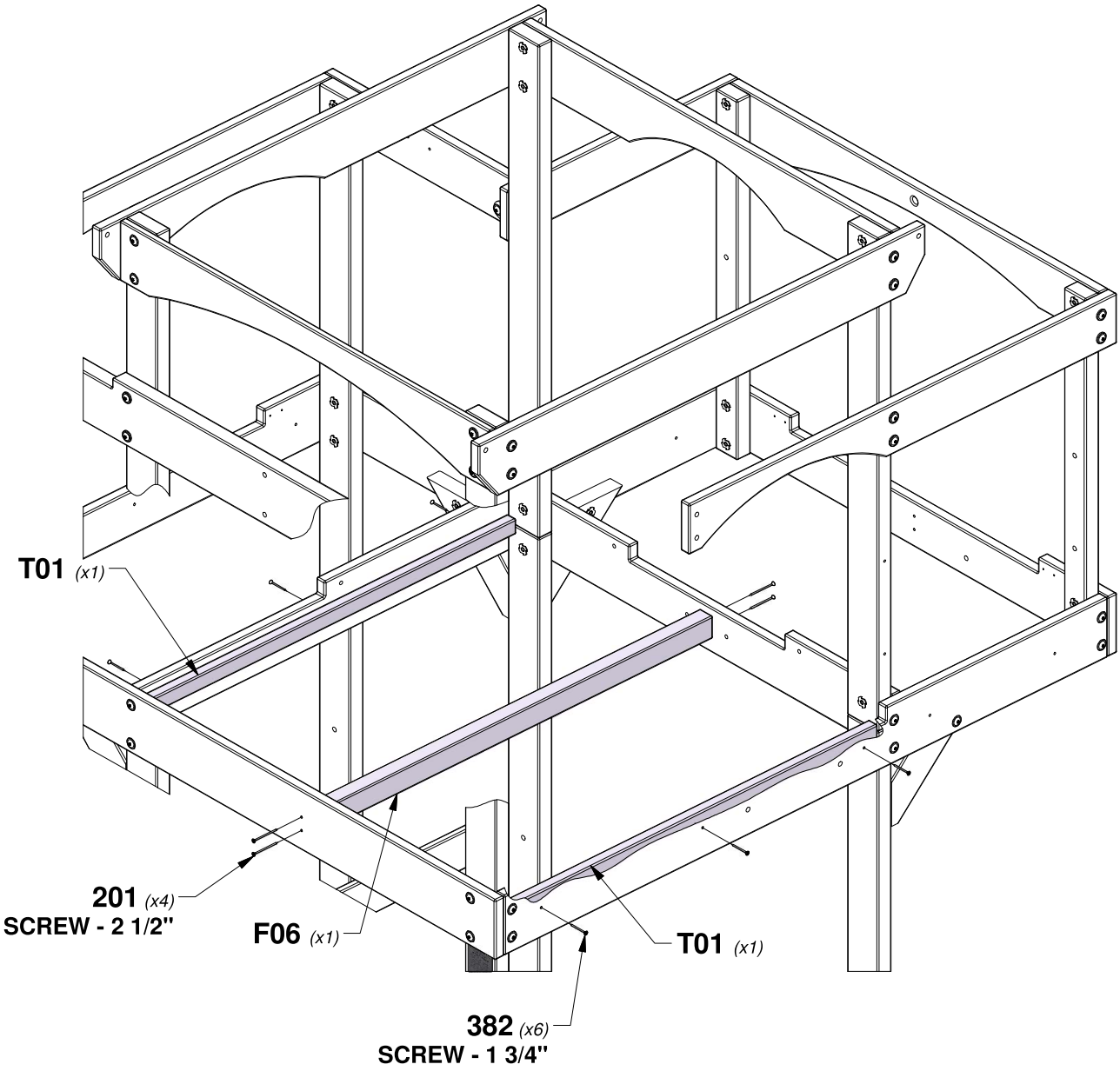

STEP 15 - FORT ASSEMBLY

J09 (x1) **FLOOR JOIST - W4L18527**
1"x2 3/8"x20 1/4" (24x60x515)

T03 (x2) **SUPPORT BOARD - W4L18509**
1"x1 3/8"x18 3/4" (24x34x477)

A4M01047 (x2) **L BRACKET 2.5x38x55x55**

QTY	PART NUMBER	DESCRIPTION
2	H100171	BOLT WH 1/4x1 BLK
2	H100201	SCREW PFH 8x2-1/2 BLK
4	H100382	SCREW PFH 8x1 3/4 BLK
2	H100398	T-NUT 1/4 BLK
1	H100399	NUT BARREL WH 1/4x7/8 BLK
1	H100401	BOLT WH 1/4x1/2 BLK

TIP:
INSTALL T-NUTS IN WOOD FIRST

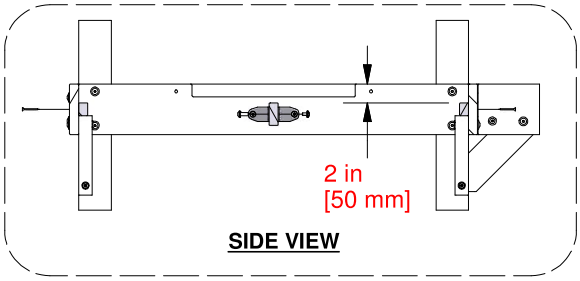

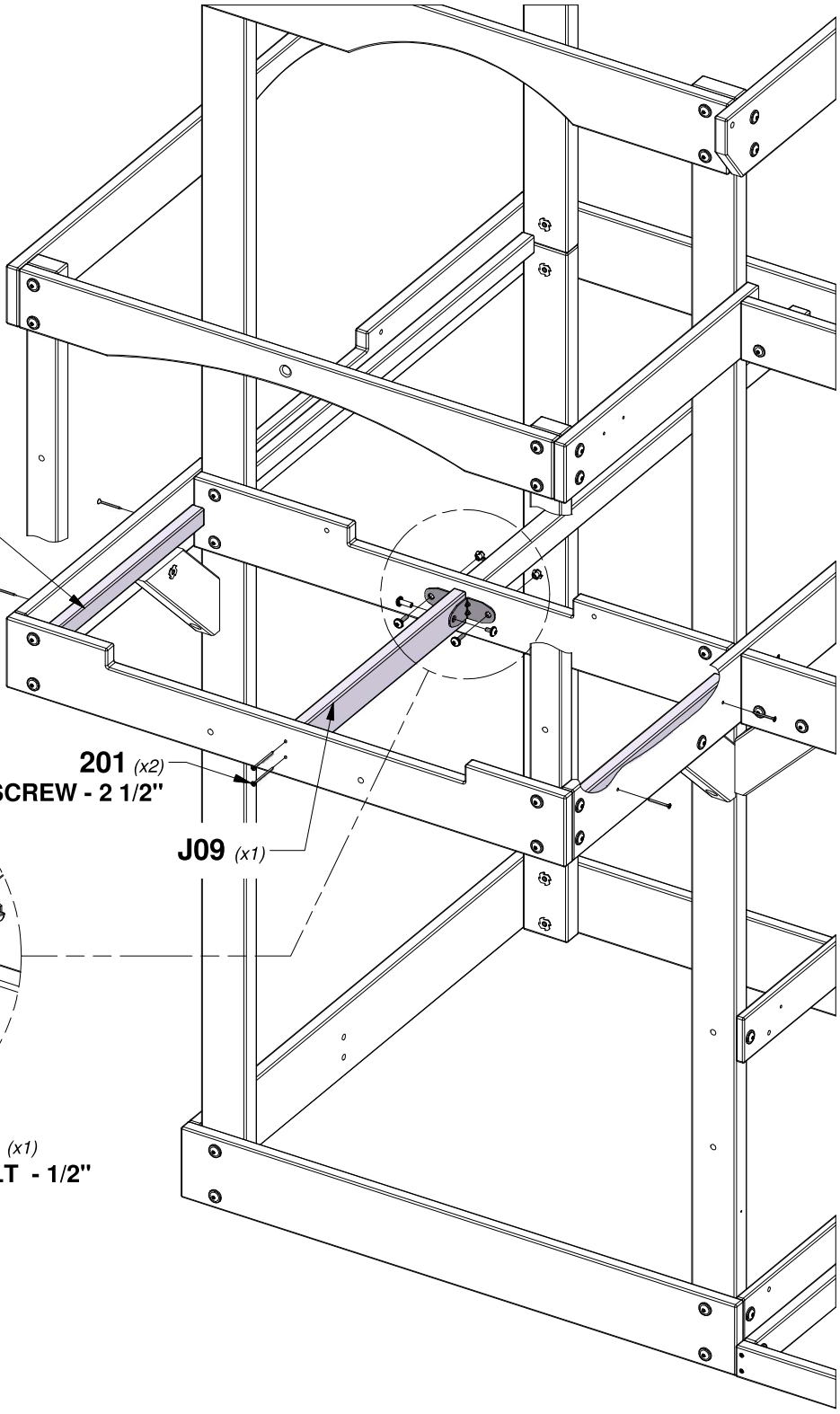

STEP 16 - FORT ASSEMBLY

QTY	PART NUMBER	DESCRIPTION
56	H100200	SCREW PFH 8x1-1/2 BLK

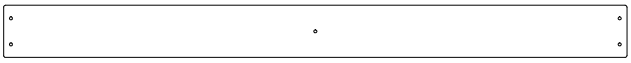

M11 **FLOOR BOARD - W4L18522**
(x10) *5/8"x3 3/8"x40 5/8" (16x86x1031)*

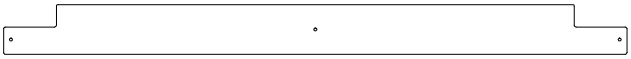

M12 **FLOOR BOARD - W4L18528**
(x2) *5/8"x3 1/4"x40 5/8" (16x82x1031)*

TIP:
PLACE BOARDS EVENLY
BEFORE INSERTING SCREWS

M12 *(x1)*

M11 *(x10)*

M12 *(x1)*

200 *(x56)*
SCREW - 1 1/2"

STEP 17 - FORT ASSEMBLY

QTY	PART NUMBER	DESCRIPTION
28	H100200	SCREW PFH 8x1-1/2 BLK

M10 **FLOOR BOARD - W4L18513**
(x1) *5/8"x3 3/8"x40 5/8" (16x86x1031)*

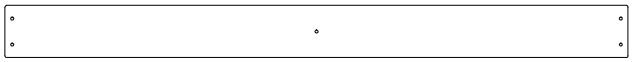

M11 **FLOOR BOARD - W4L18522**
(x5) *5/8"x3 3/8"x40 5/8" (16x86x1031)*

TIP:
PLACE BOARDS EVENLY
BEFORE INSERTING SCREWS

200 *(x28)*
SCREW - 1 1/2"

M11 *(x5)*

M10 *(x1)*

STEP 18 - FORT ASSEMBLY

QTY	PART NUMBER	DESCRIPTION
6	H100382	SCREW PFH 8x1 3/4 BLK

T01 (x1) **SUPPORT BOARD - W4L18507**
1"x1 3/8"x37 5/8" (24x34x957)

T02 (x1) **SUPPORT BOARD - W4L18508**
1"x1 3/8"x37 3/4" (24x34x959)

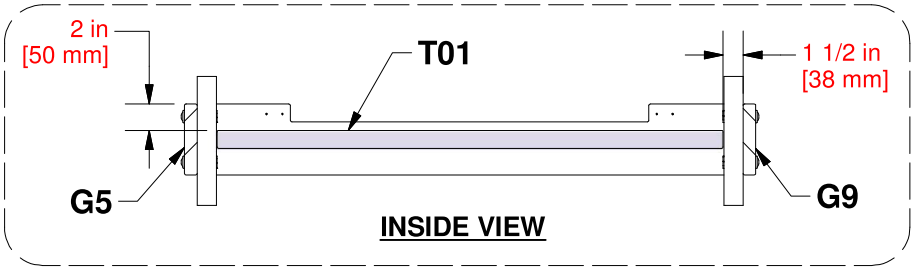

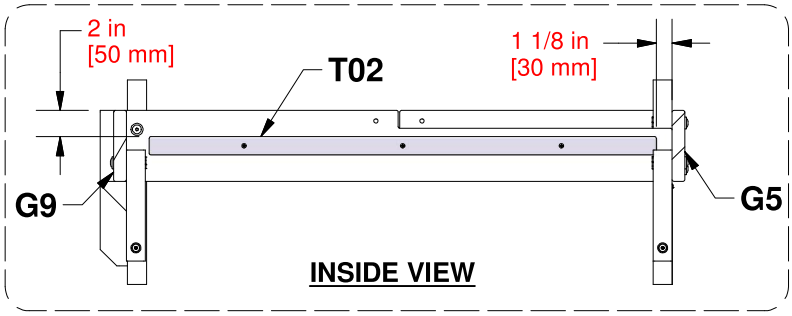

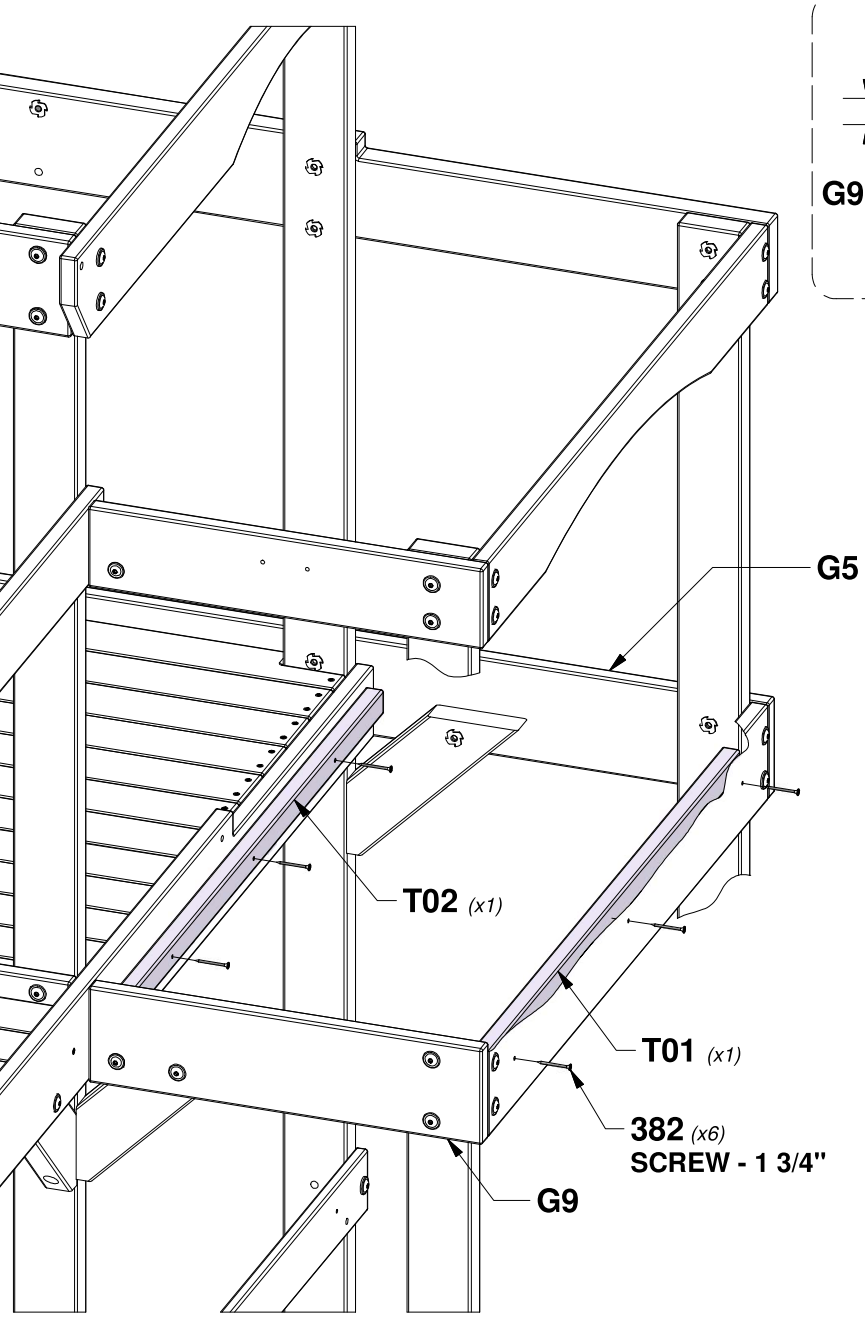

STEP 19 - FORT ASSEMBLY

QTY	PART NUMBER	DESCRIPTION
44	H100200	SCREW PFH 8x1-1/2 BLK

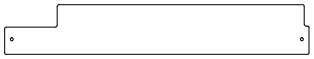

M08 (x1) **FLOOR BOARD - W4L18526**
5/8"x3 1/4"x19 7/8" (16x82x504)

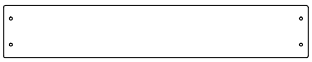

M09 (x10) **FLOOR BOARD - W4L18521**
5/8"x3 3/8"x19 7/8" (16x86x504)

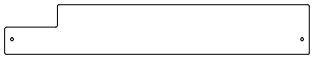

M13 (x1) **FLOOR BOARD - W4L18525**
5/8"x3 1/4"x19 7/8" (16x82x504)

TIP:
PLACE BOARDS EVENLY
BEFORE INSERTING SCREWS

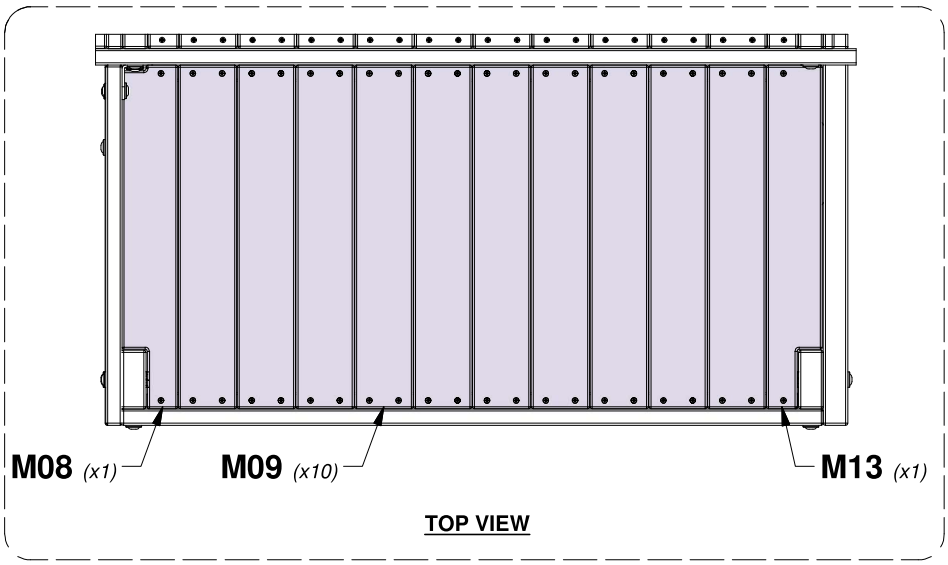

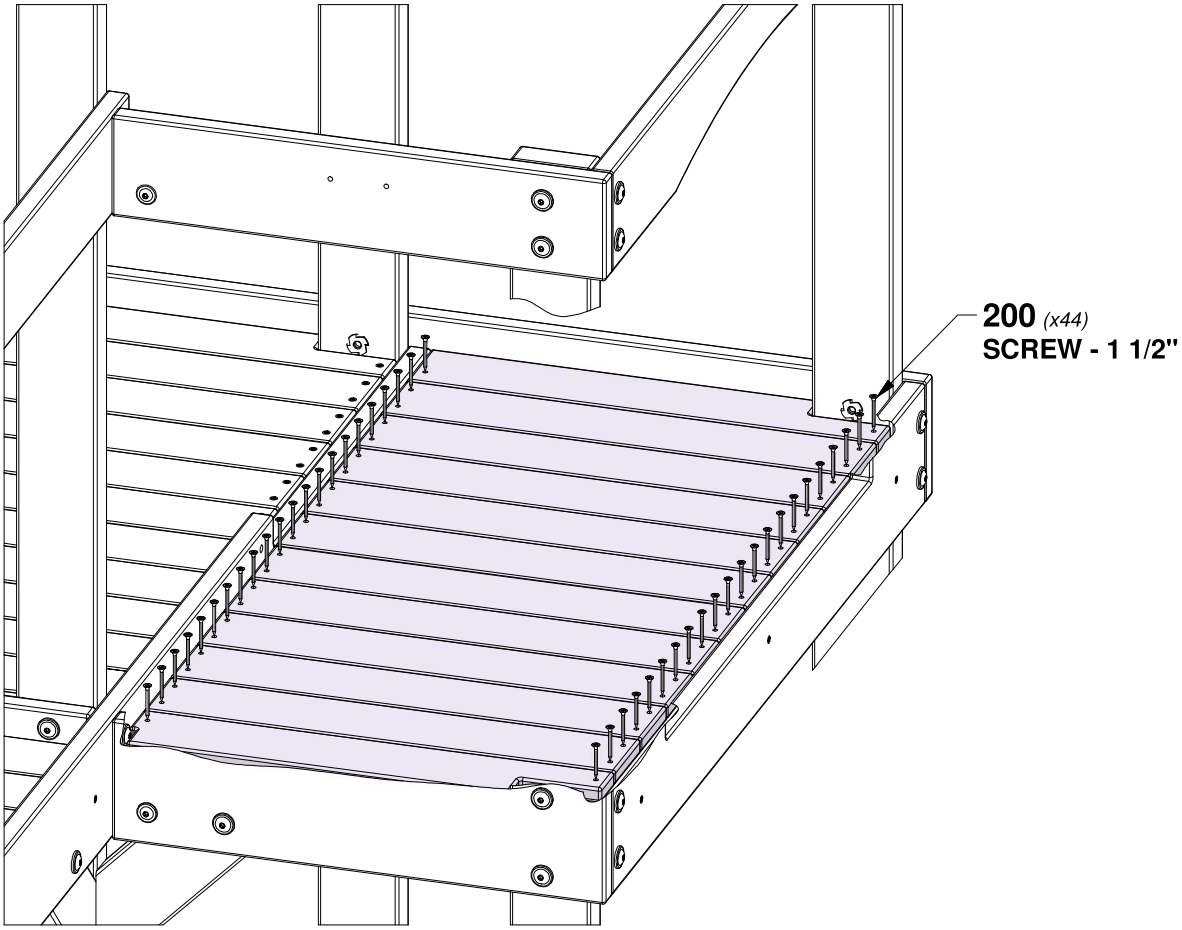

STEP 20 - FORT ASSEMBLY

QTY	PART NUMBER	DESCRIPTION
6	H100398	T-NUT 1/4 BLK
6	H100405	WASHER LOCK EXT 6x15 BLK
6	H100406	BOLT WH 1/4x1 1/2 BLK

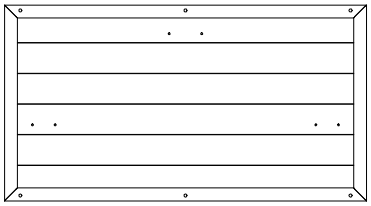

WP01 **WALL PANEL - W2A03778**
(x1) *1"x20 3/8"x37 3/4" (24x517x958)*

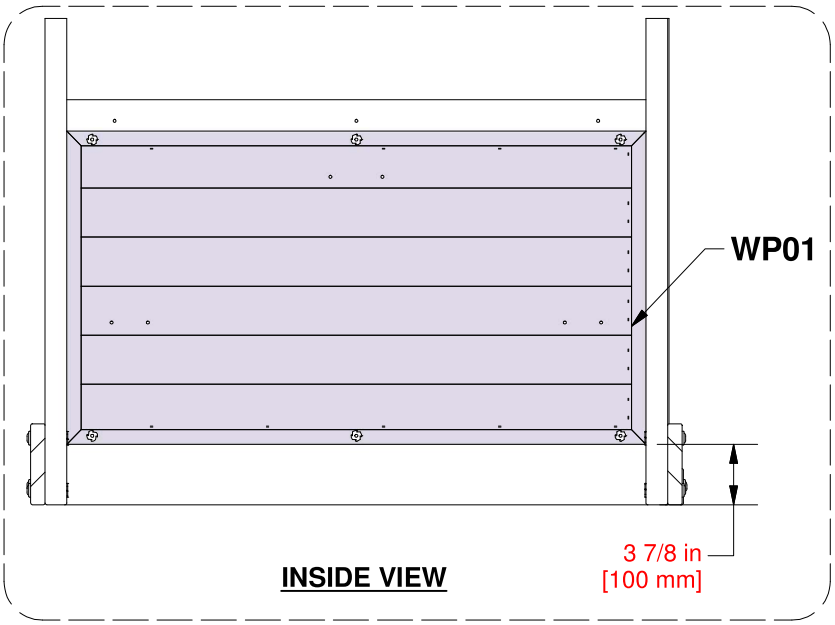

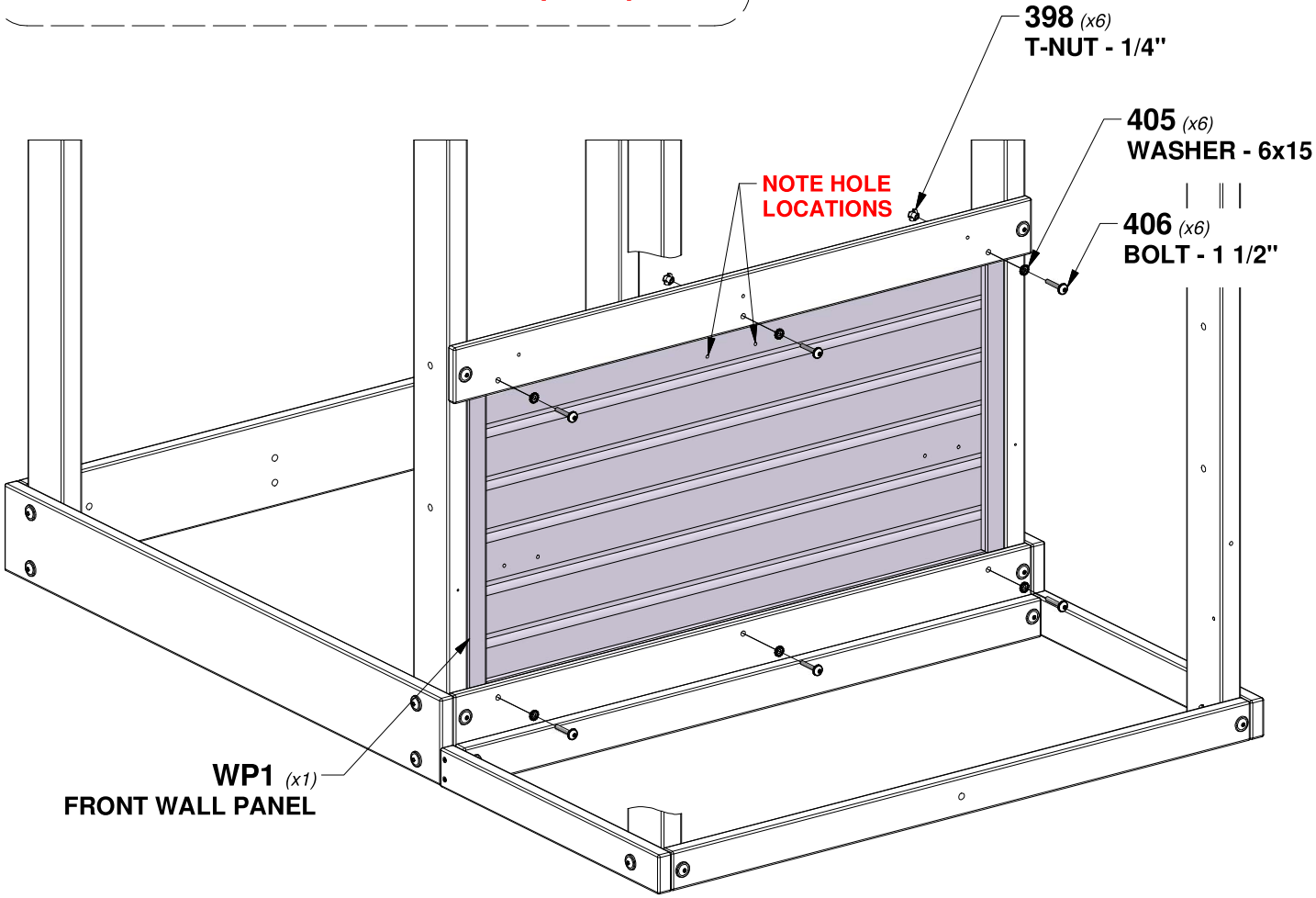

STEP 21 - FORT ASSEMBLY

QTY	PART NUMBER	DESCRIPTION
3	H100387	SCREW PFH 8x1-1/4 BLK

T04 **SUPPORT BOARD - W4L18515**
(x1) *1"x1 3/8"x37 3/4" (24x34x958)*

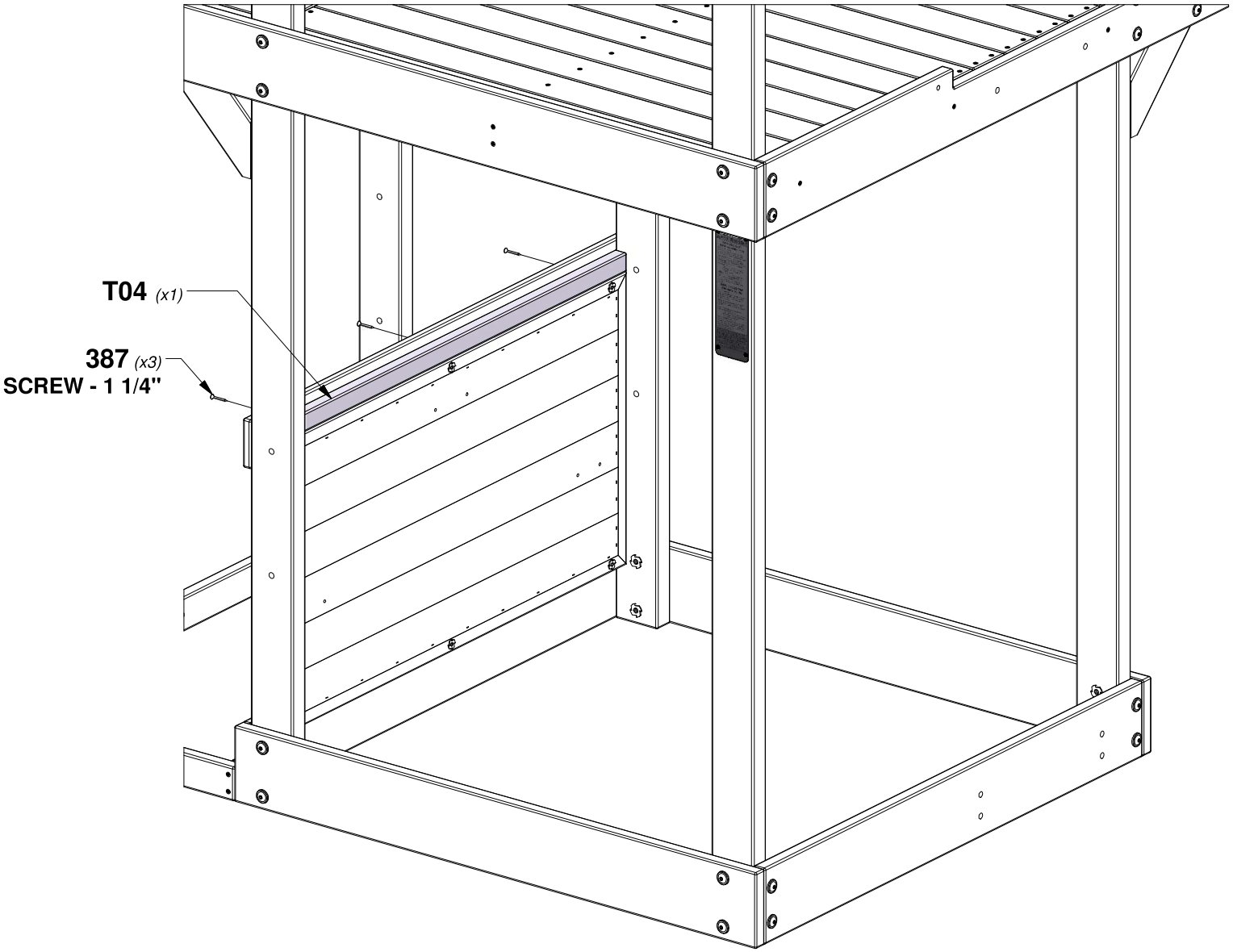

STEP 22 - FORT ASSEMBLY

QTY	PART NUMBER	DESCRIPTION
4	H100387	SCREW PFH 8x1-1/4 BLK

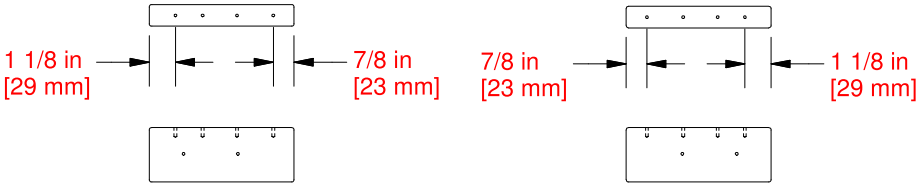

J6 (x1) **SUPPORT BLOCK - W4L17817**
1"x2 3/8"x6 1/4" (24x60x160)

J11 (x1) **SUPPORT BLOCK - W4L17818**
1"x2 3/8"x6 1/4" (24x60x160)

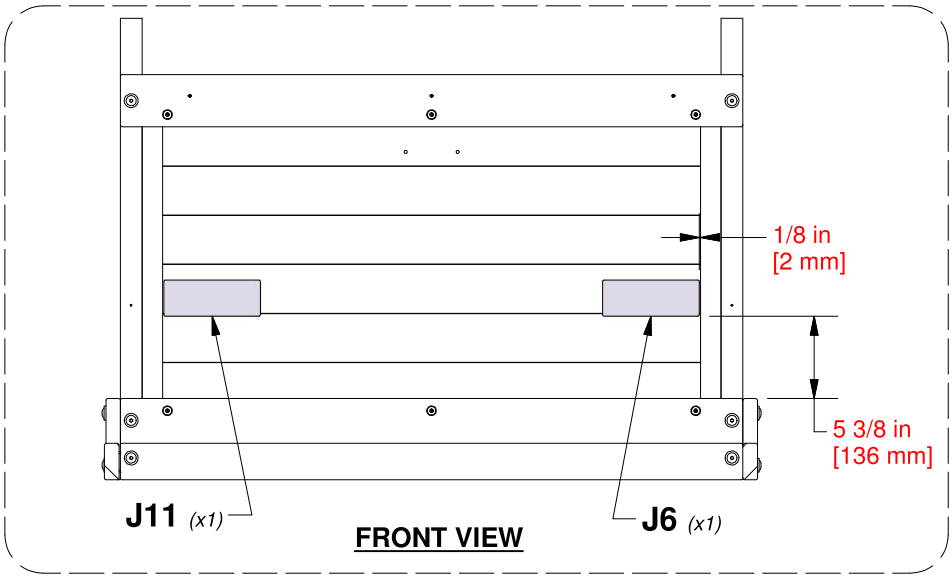

TIP:
ALIGN PILOT HOLES IN WALL PANEL TO PILOT HOLES IN (J) BOARDS.

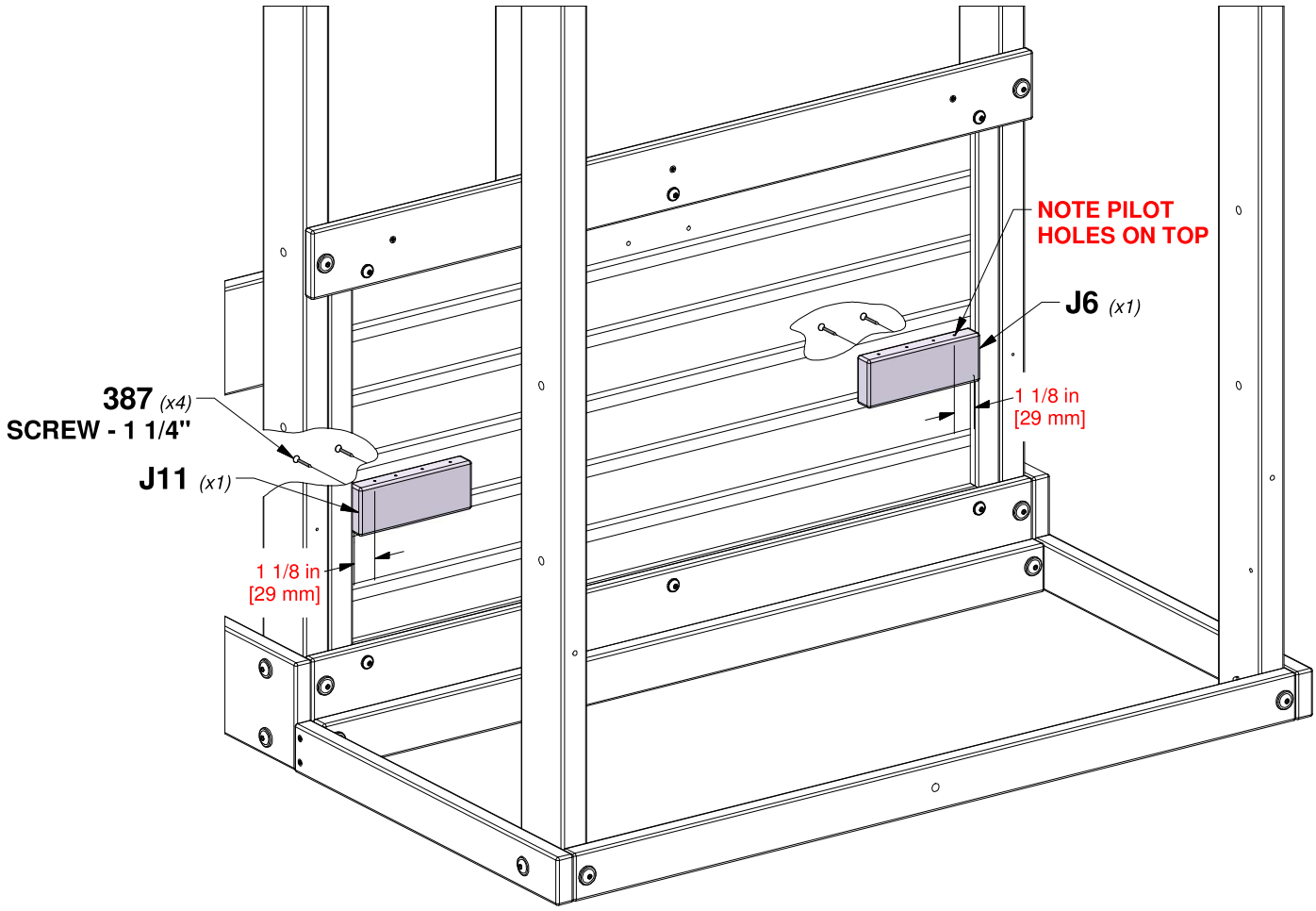

STEP 23 - FORT ASSEMBLY

QTY	PART NUMBER	DESCRIPTION
1	H100195	BOLT WH 5/16x2-3/4 BLK
1	H100198	WASHER LOCK EXT 8x19 BLK
1	H100379	T-NUT 5/16 BLK

H1 (x1) **TABLE SUPPORT - W4L11147**
1"x3 3/8"x22 3/8" (24x86x567)

J7 (x1) **SUPPORT BLOCK - W4L11158**
1"x2 3/8"x3 3/8" (24x60x86)

TIP:
INSTALL T-NUTS IN WOOD FIRST

H1 *(x1)*

379 *(x1)*
T-NUT - 5/16"

J7 *(x1)*

198 *(x1)*
WASHER - 8x19

195 *(x1)*
BOLT - 2-3/4

STEP 24 - FORT ASSEMBLY

QTY	PART NUMBER	DESCRIPTION
42	H100200	SCREW PFH 8x1-1/2 BLK

K17 (x2) **FLOOR BOARD - W4L18523**
5/8"x5 1/4"x21 1/8" (16x134x537)

L05 (x1) **FLOOR BOARD - W4L18524**
5/8"x4 1/8"x19 1/4" (16x104x488)

M04 (x8) **FLOOR BOARD - W4L18506**
5/8"x3 3/8"x21 1/8" (16x86x537)

TIP:
PLACE BOARDS EVENLY
BEFORE INSERTING SCREWS

200 *(x42)*
SCREW - 1 1/2"

K17 *(x1)*

L05 *(x1)*

M04 *(x8)*

K17 *(x1)*

STEP 25 - FORT ASSEMBLY

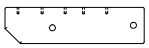

J3 **BENCH SUPPORT - W4L18017**
(x2) *1"x2 3/8"x9" (24x60x230)*

J5 **SUPPORT BLOCK - W4L18022**
(x2) *1"x2 3/8"x2 7/8" (24x60x72)*

F5 **ANGLE BRACE - W4L17822**
(x2) *1 3/8"x2 3/8"x9 1/2" (36x60x240)*

QTY	PART NUMBER	DESCRIPTION
4	H100198	WASHER LOCK EXT 8x19 BLK
2	H100205	BOLT WH 5/16x2-1/4 BLK
2	H100379	T-NUT 5/16 BLK
4	H100382	SCREW PFH 8x1 3/4 BLK
2	H100405	WASHER LOCK EXT 6x15 BLK
2	H100458	LAG SCREW WH 5/16x2 BLK
2	H100487	LAG SCREW WH 1/4x2 BLK

TIP:
INSTALL T-NUTS IN WOOD FIRST

J5 *(x2)*

J3 *(x2)*

F5 *(x2)*

FLUSH

NOTE PILOT HOLES ON TOP

FLUSH

382 *(x4)*
SCREW - 1 3/4"

NOTE PILOT HOLES ON TOP

379 *(x2)*
T-NUT - 5/16"

458 *(x2)*
LAG SCREW - 2"

198 *(x4)*
WASHER - 8x19

487 *(x2)*
LAG SCREW - 2"

205 *(x2)*
BOLT - 2 1/4"

405 *(x2)*
WASHER - 6x15

STEP 26 - FORT ASSEMBLY

QTY	PART NUMBER	DESCRIPTION
22	H100382	SCREW PFH 8x1 3/4 BLK

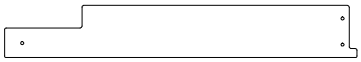

H06 **BENCH BOARD - W4L18518**
(x2) *1"x3 3/8"x23" (24x86x583)*

H07 **BENCH BOARD - W4L18519**
(x2) *1"x2 3/8"x23" (24x60x583)*

H08 **BENCH BOARD - W4L18520**
(x2) *1"x3 3/8"x23" (24x86x583)*

TIP:
ALIGN PILOT HOLES BEFORE INSERTING SCREWS

382 *(x22)*
SCREW - 1 3/4"

H06 *(x1)*
H07 *(x1)*
H08 *(x1)*

H06 *(x1)*
H07 *(x1)*
H08 *(x1)*

STEP 27 - FORT ASSEMBLY

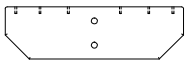

H2 (x1) **TABLE SUPPORT - W4L18018**
1"x3 3/8"x11 5/8" (24x86x295)

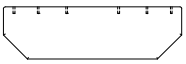

H3 (x1) **TABLE SUPPORT - W4L18021**
1"x3 3/8"x11 5/8" (24x86x295)

K16 (x1) **TABLE BOARD - W4L18530**
5/8"x5 1/4"x23" (16x134x583)

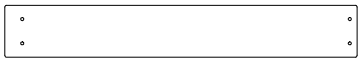

M03 (x2) **BENCH BOARD - W4L18529**
5/8"x3 3/8"x23" (16x86x583)

QTY	PART NUMBER	DESCRIPTION
12	H100200	SCREW PFH 8x1-1/2 BLK
2	H100387	SCREW PFH 8x1-1/4 BLK
2	H100198	WASHER LOCK EXT 8x19 BLK
2	H100378	BOLT WH 5/16x1 3/4 BLK
2	H100379	T-NUT 5/16 BLK

TIP:
INSTALL T-NUTS IN WOOD FIRST.
ALIGN PILOT HOLES.

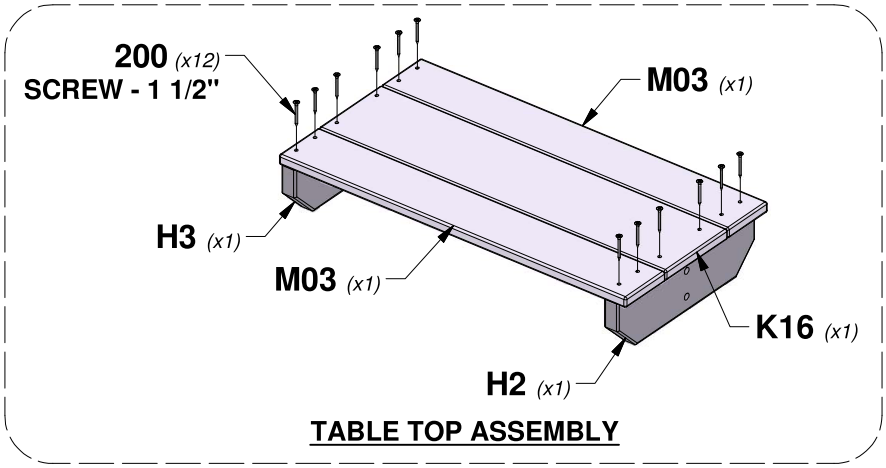

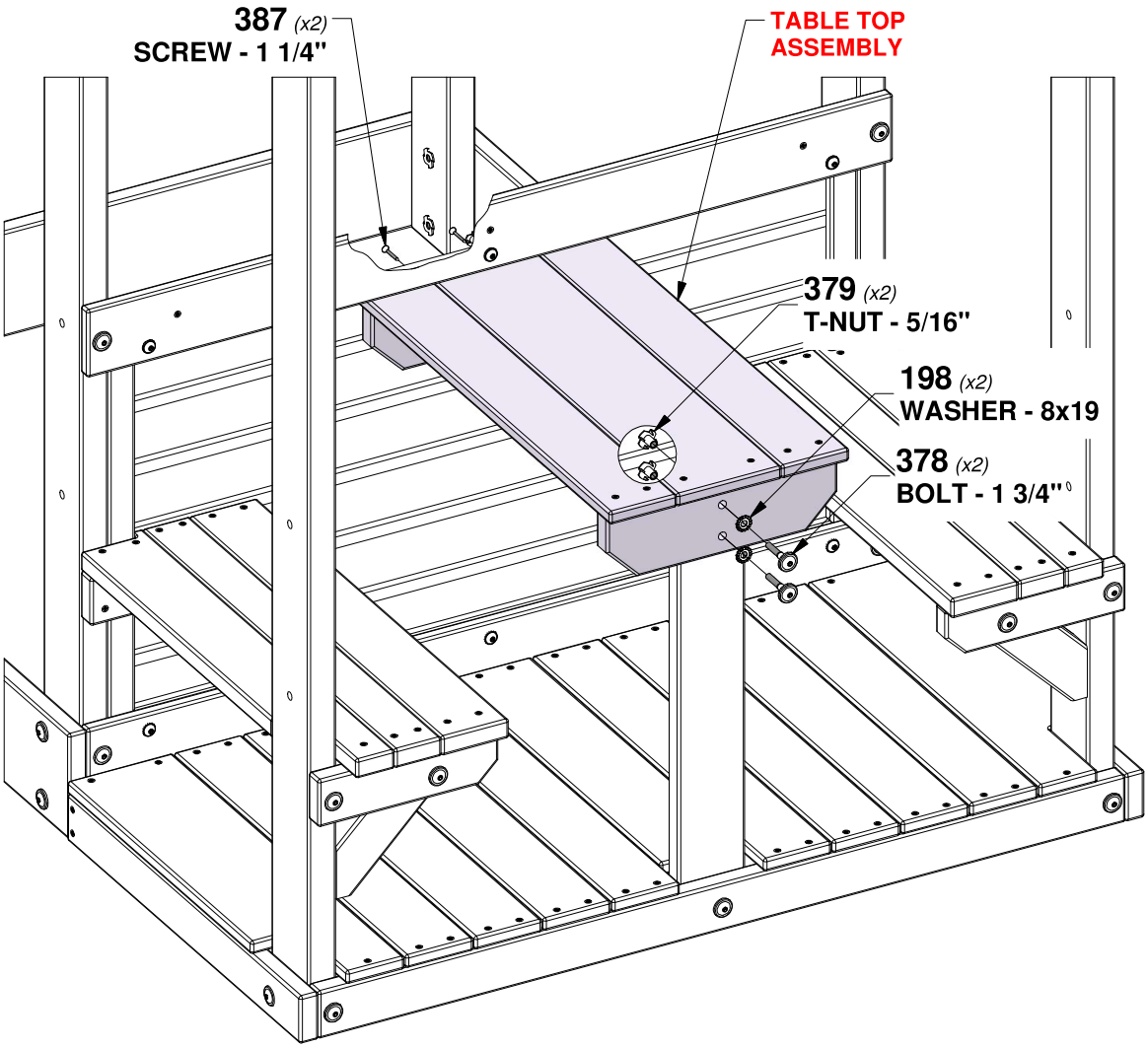

STEP 28 - FORT ASSEMBLY

QTY	PART NUMBER	DESCRIPTION
8	H100382	SCREW PFH 8x1 3/4 BLK

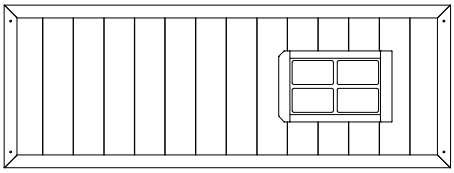

WP02 **WALL PANEL - W2A03779**
(x1) *1"x16 7/8"x46 1/2" (24x430x1181)*

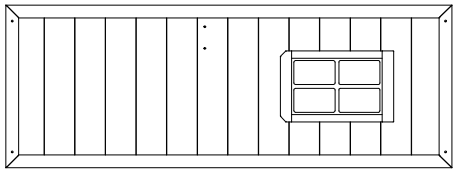

WP11 **WALL PANEL - W2A03788**
(x1) *1"x16 7/8"x46 1/2" (24x430x1181)*

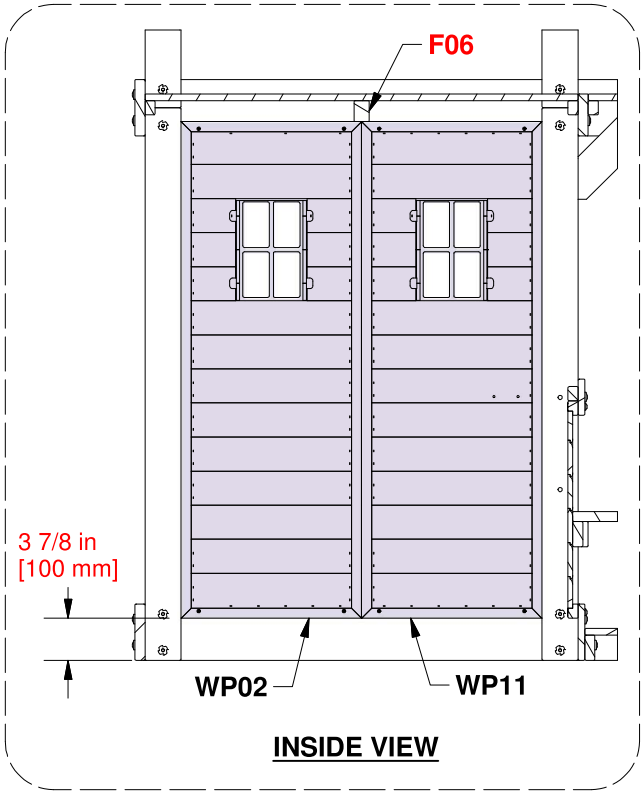

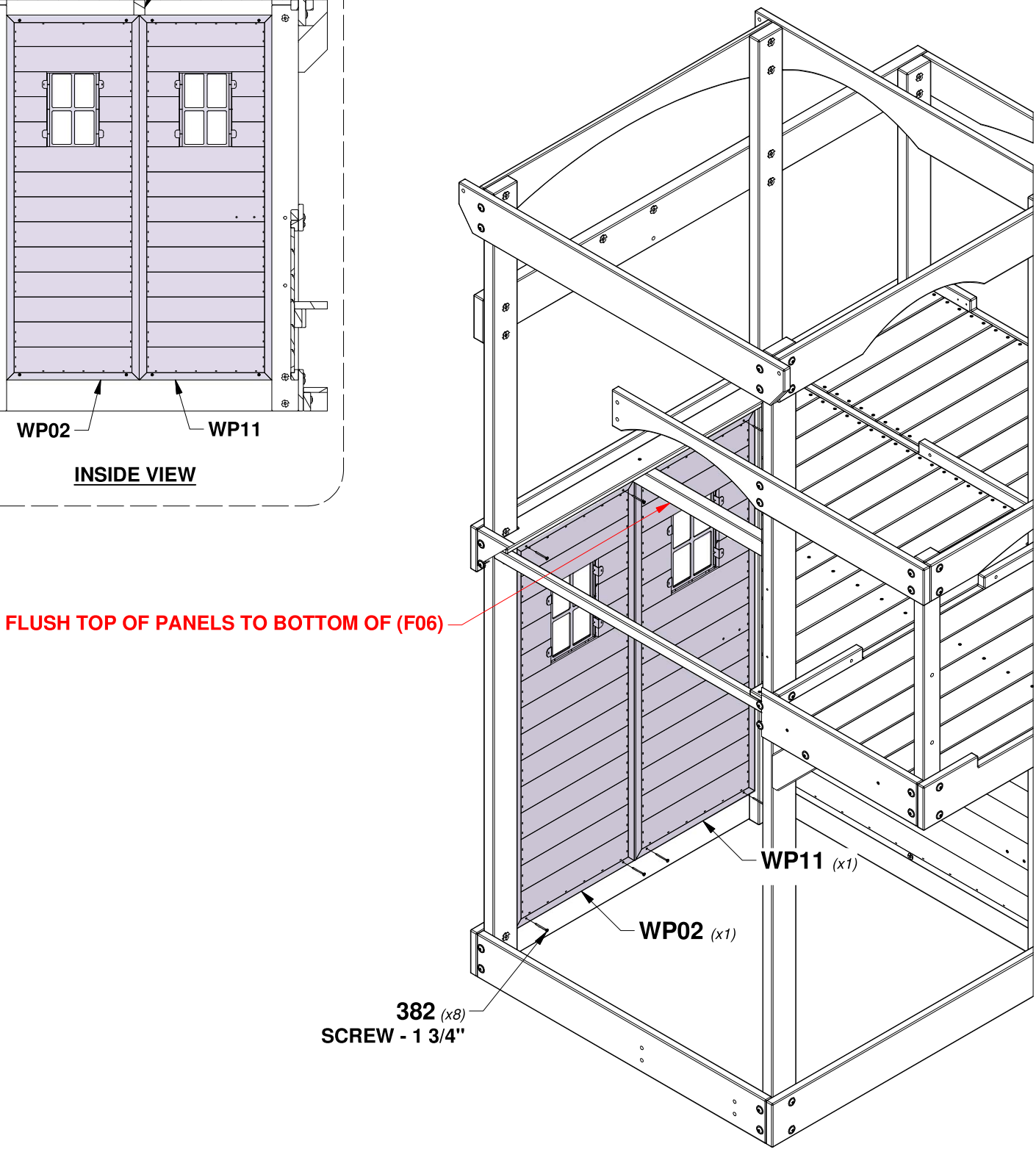

STEP 29 - FORT ASSEMBLY

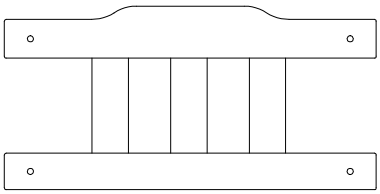

WP10 (x1) **BENCH BACK ASSEMBLY - W2A037777**
1 1/8"x11 7/8"x24 1/4" (27x303x615)

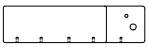

F03 (x1) **SUPPORT BLOCK - W4L18516**
1 3/8"x2 3/8"x9 1/4" (36x60x234)

QTY	PART NUMBER	DESCRIPTION
1	H100195	BOLT WH 5/16x2-3/4 BLK
4	H100198	WASHER LOCK EXT 8x19 BLK
3	H100200	SCREW PFH 8x1-1/2 BLK
4	H100379	T-NUT 5/16 BLK
3	H100457	BOLT WH 5/16x2 BLK

TIP:
INSTALL T-NUTS IN WOOD FIRST

379 *(x4)*
T-NUT - 5/16"

457 *(x3)*
BOLT - 2"

198 *(x4)*
WASHER - 8x19

WP10 *(x1)*

200 *(x1)*
SCREW - 1 1/2"

F03 *(x1)*

TIP:
INSTALL 195 BOLT, LEVEL F3, SECURE WITH SCREWS.

195 *(x1)*
BOLT - 2-3/4

200 *(x2)*
SCREW - 1 1/2"

STEP 30 - FORT ASSEMBLY

QTY	PART NUMBER	DESCRIPTION
4	H100382	SCREW PFH 8x1 3/4 BLK

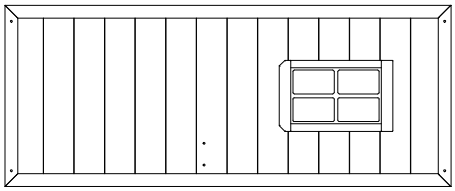

WP12 **WALL PANEL - W2A03789**
(x1) *1"x16 7/8"x46 1/2" (24x479x1181)*

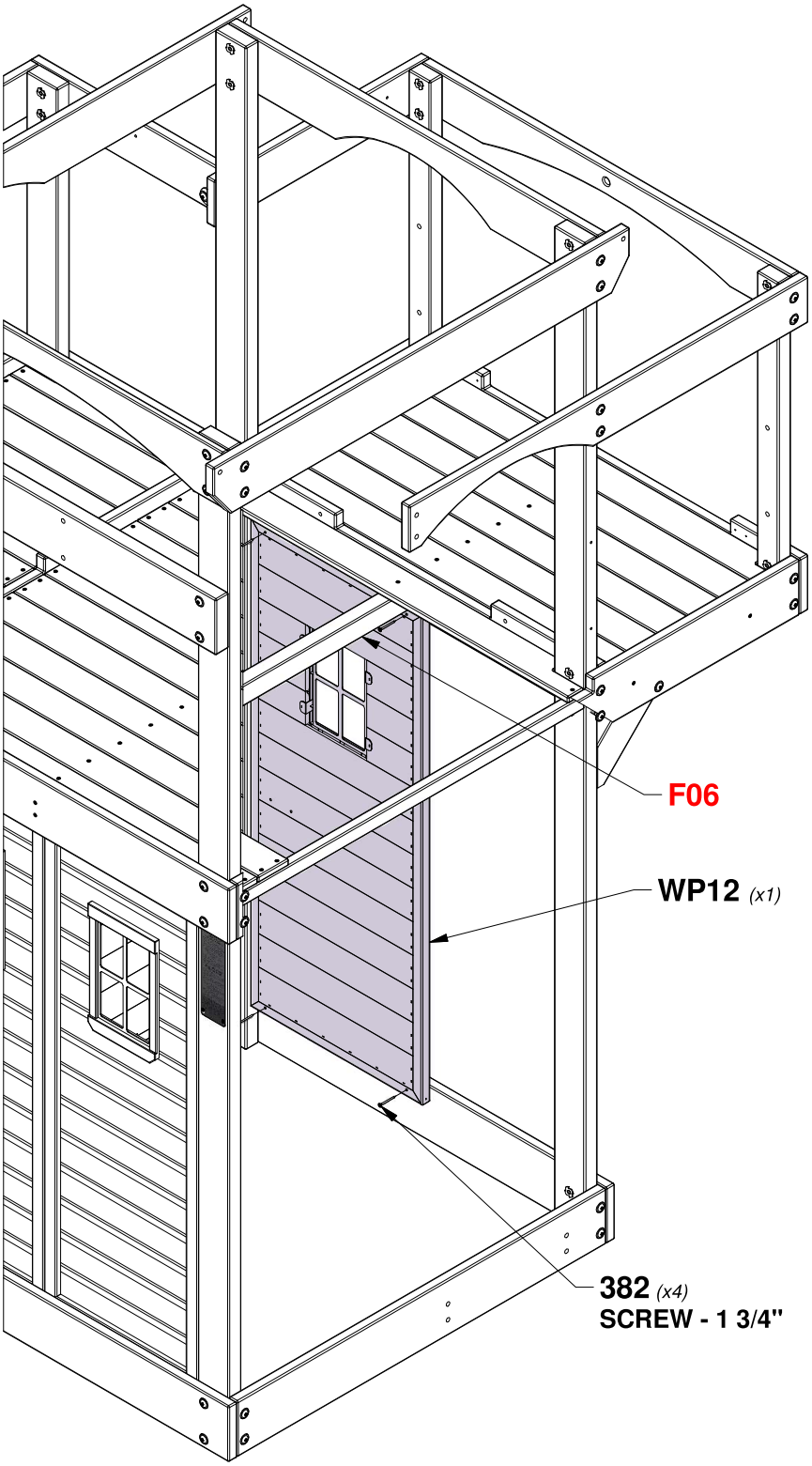

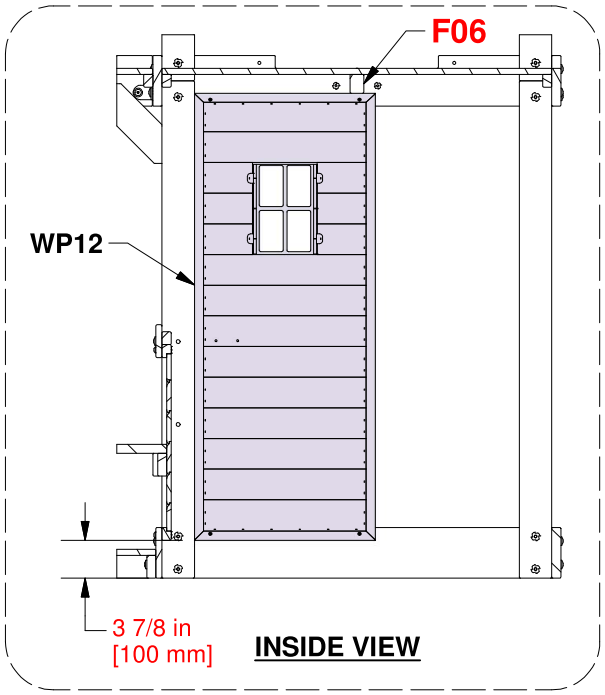

STEP 31 - FORT ASSEMBLY

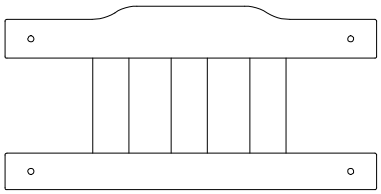

WP10 **BENCH BACK ASSEMBLY - W2A037777**
(x1) *1 1/8"x11 7/8"x24 1/4" (27x303x615)*

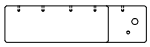

F04 **SUPPORT BLOCK - W4L18517**
(x1) *1 3/8"x2 3/8"x9 1/4" (36x60x234)*

QTY	PART NUMBER	DESCRIPTION
1	H100195	BOLT WH 5/16x2-3/4 BLK
4	H100198	WASHER LOCK EXT 8x19 BLK
3	H100200	SCREW PFH 8x1-1/2 BLK
4	H100379	T-NUT 5/16 BLK
3	H100457	BOLT WH 5/16x2 BLK

TIP:
INSTALL T-NUTS IN WOOD FIRST

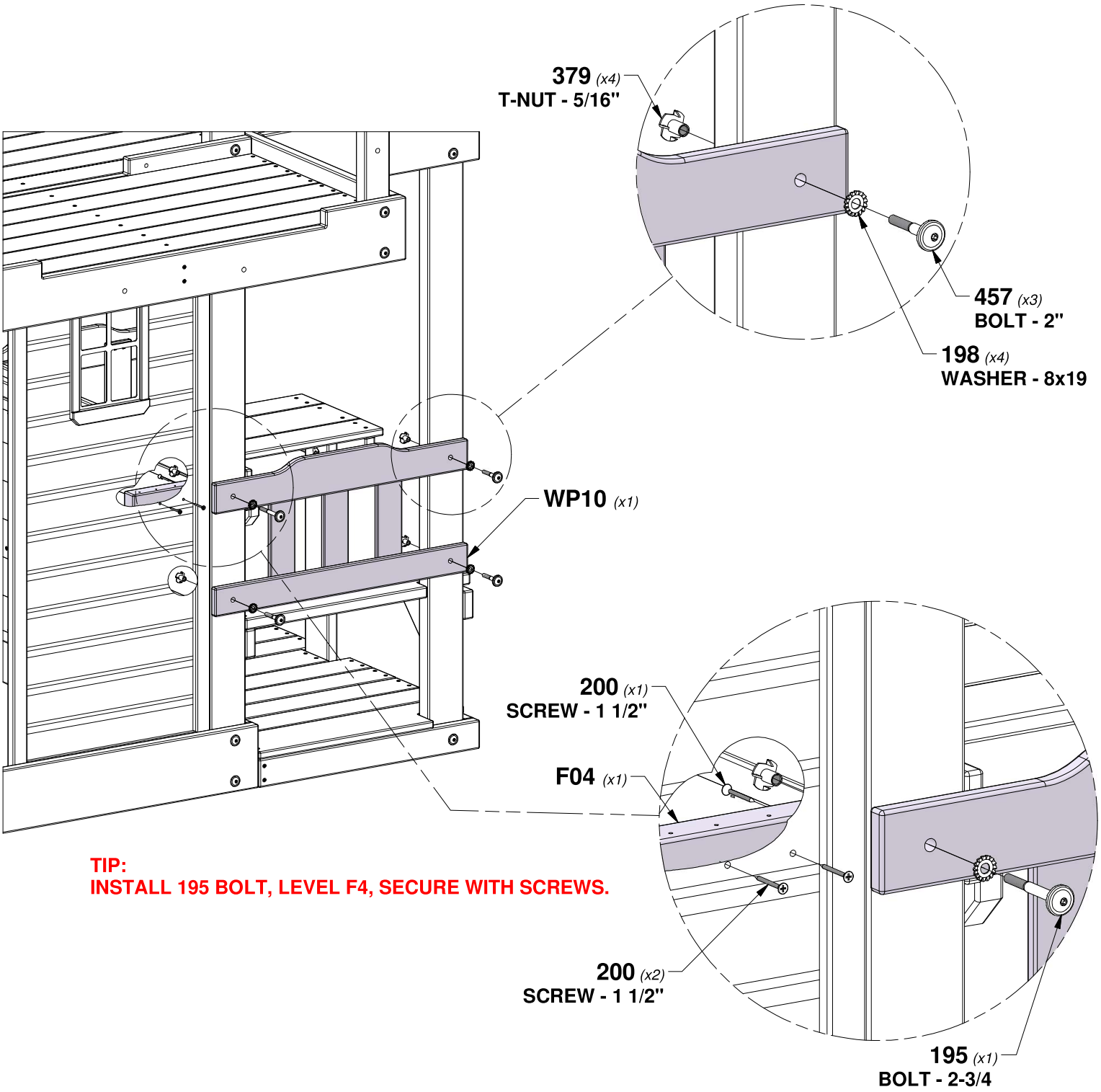

TIP:
INSTALL 195 BOLT, LEVEL F4, SECURE WITH SCREWS.

STEP 32 - FORT ASSEMBLY

QTY	PART NUMBER	DESCRIPTION
14	H100200	SCREW PFH 8x1-1/2 BLK

M06 (x1) **COUNTER TOP - W4L18511**
5/8"x3 3/8"x37 5/8" (16x86x957)

M07 (x2) **COUNTER TOP - W4L18512**
5/8"x3 3/8"x38 5/8" (16x86x981)

TIP:
ALIGN PILOT HOLES

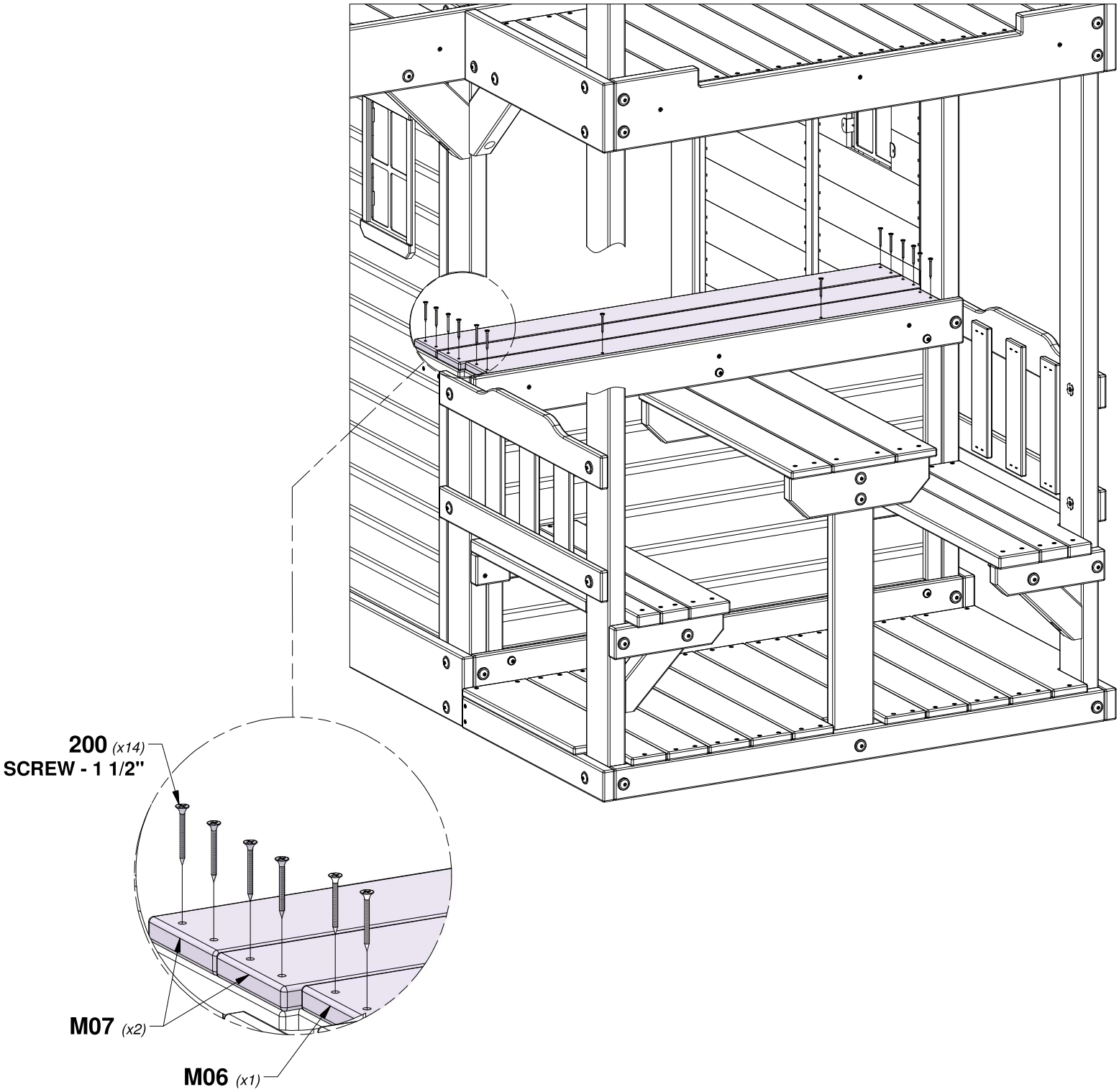

STEP 33 - FORT ASSEMBLY

QTY	PART NUMBER	DESCRIPTION
4	H100382	SCREW PFH 8x1 3/4 BLK

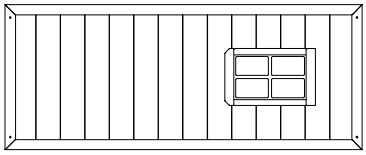

WP09 **WALL PANEL - W2A03781**
(x1) *1"x16 7/8"x46 1/2" (24x479x1181)*

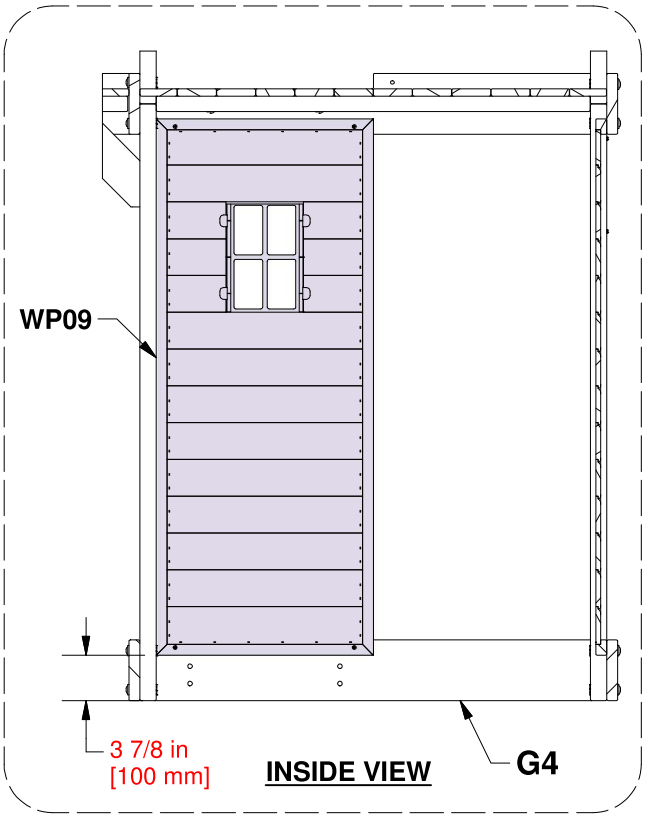

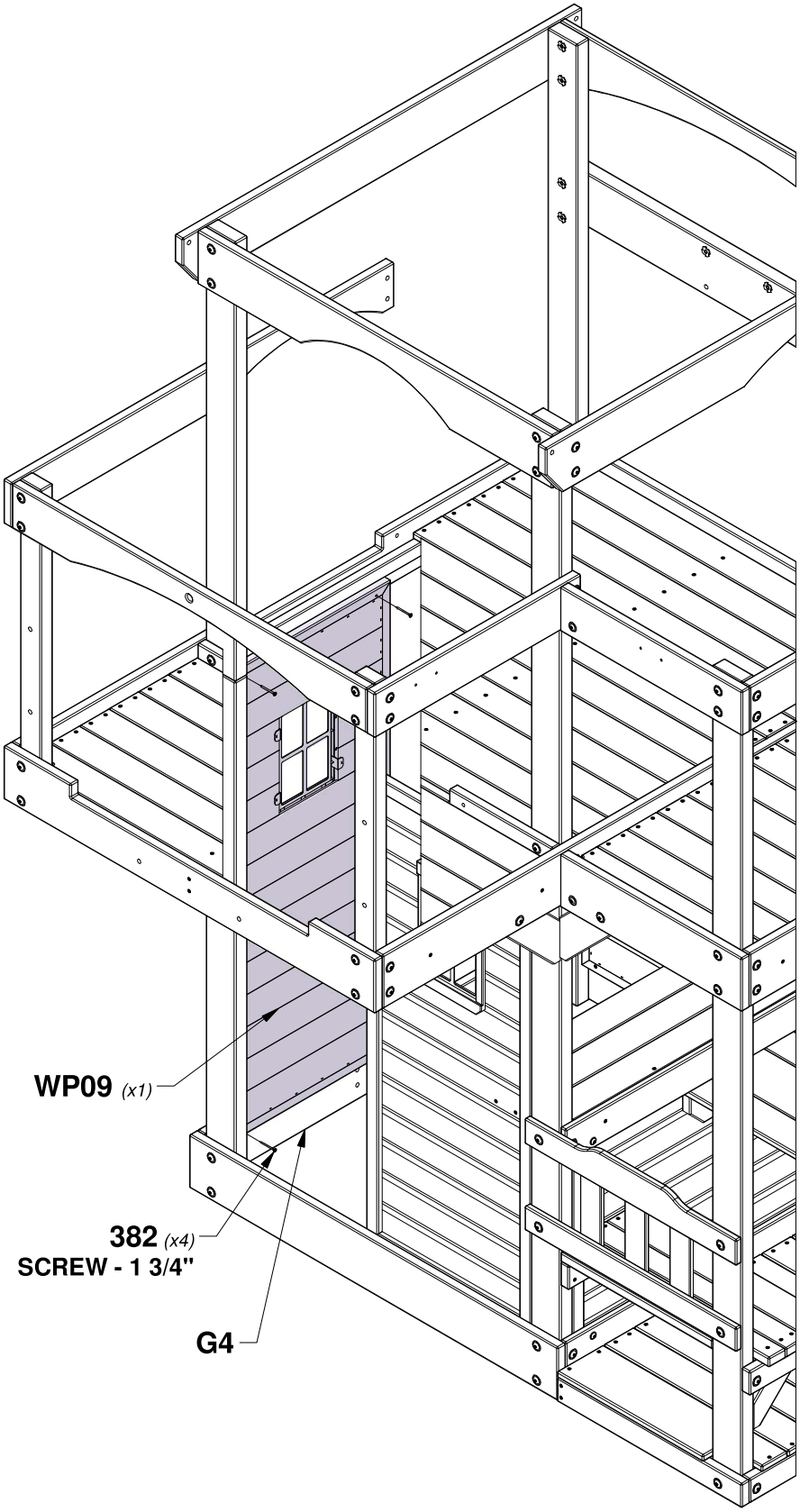

STEP 34 - FORT ASSEMBLY

QTY	PART NUMBER	DESCRIPTION
2	H100538	SCREW PFH 8x1 1/2 SD
2	H100544	SCREW PWH 8x5/8 SD

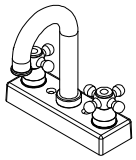

A6P00024 *(x1)* **FAUCET KIT**

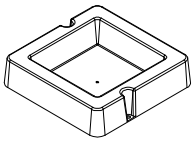

A6P00032 *(x1)* **SURFACE MOUNT BASIN**

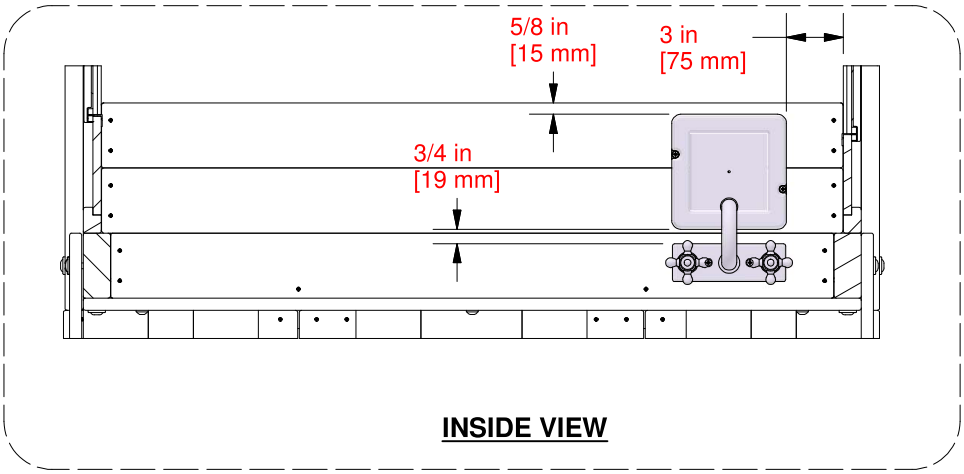

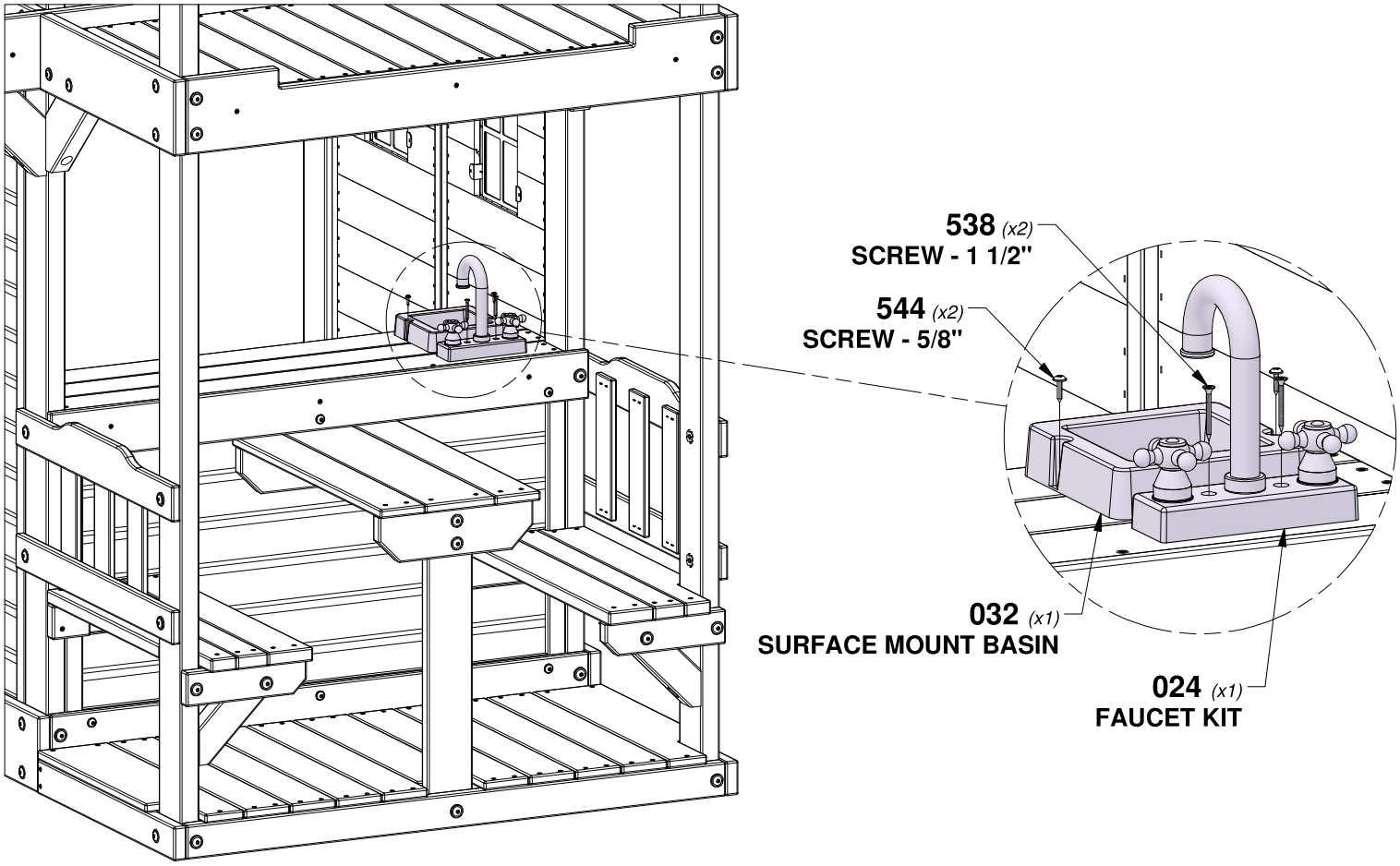

STEP 35 - FORT ASSEMBLY

QTY	PART NUMBER	DESCRIPTION
4	H100544	SCREW PWH 8x5/8 SD

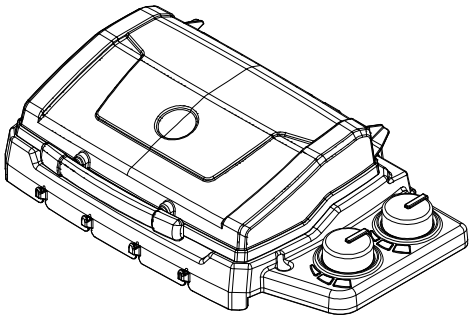

A6P00282 *(x1)* **BBQ GRILL**

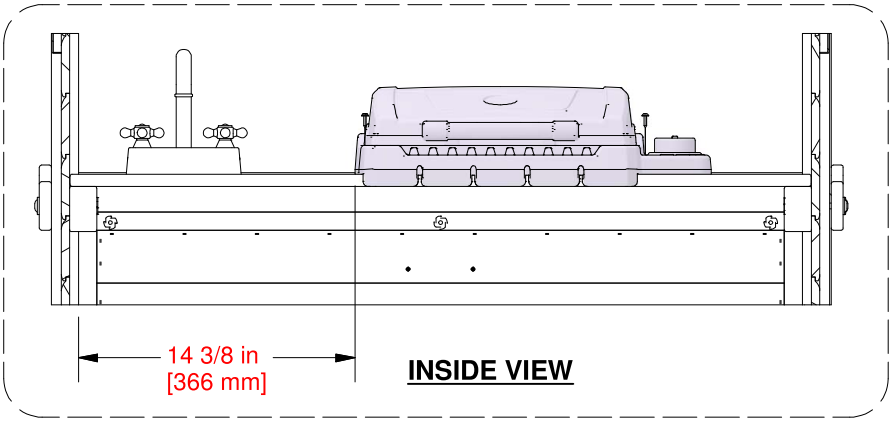

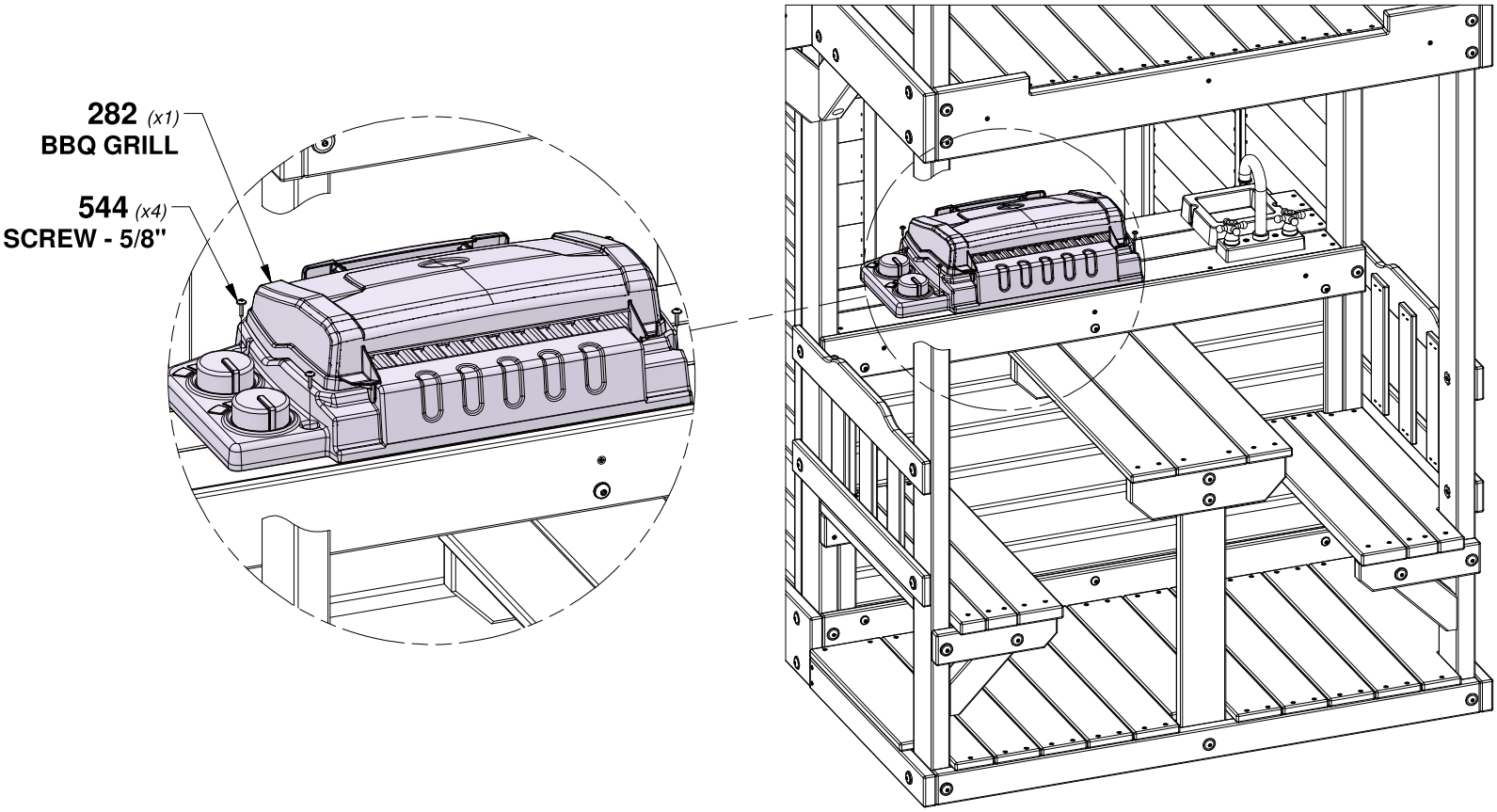

STEP 36 - FORT ASSEMBLY

QTY	PART NUMBER	DESCRIPTION
2	H100198	WASHER LOCK EXT 8x19 BLK
2	H100378	BOLT WH 5/16x1 3/4 BLK

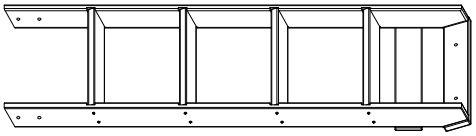

LADDER ASSEMBLY *(x1)*

198 *(x2)*
WASHER - 8x19

378 *(x2)*
BOLT - 1 3/4"

LADDER ASSEMBLY

STEP 37 - FORT ASSEMBLY

QTY	PART NUMBER	DESCRIPTION
4	H100198	WASHER LOCK EXT 8x19 BLK
4	H100378	BOLT WH 5/16x1 3/4 BLK
12	H100379	T-NUT 5/16 BLK
8	H100468	BOLT WH 5/16x1 BLK

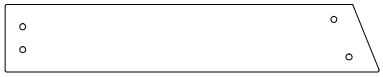

Q2 (x2) **GROUND BOARD - W4L17640**
1"x4 3/8"x24 3/8" (24x112x620)

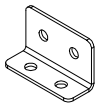

A4M00855 (x2) **L BRACKET 32x51x82**

TIP:
INSTALL T-NUTS IN WOOD FIRST

855 *(x2)*
L BRACKET

468 *(x8)*
BOLT - 1"

379 *(x12)*
T-NUT - 5/16"

Q2 *(x2)*

378 *(x4)*
BOLT - 1 3/4"

198 *(x4)*
WASHER - 8x19

STEP 38 - FORT ASSEMBLY

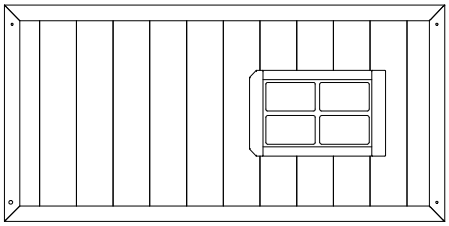

WP07 **WALL PANEL - W2A03783**
(x1) *1"x16 7/8"x46 1/2" (24x476x971)*

QTY	PART NUMBER	DESCRIPTION
3	H100382	SCREW PFH 8x1-3/4 BLK
1	H100398	T-NUT 1/4 BLK
1	H100405	WASHER LOCK EXT 6x15 BLK
1	H101026	BOLT WH 1/4x1-3/4 BLK

TIP:
INSTALL T-NUTS IN WOOD FIRST

382 *(x3)*
SCREW - 1 3/4"

WP07 *(x1)*

026 *(x1)*
BOLT - 1-3/4"

405 *(x1)*
WASHER - 6x15

398 *(x1)*
T-NUT - 1/4"

STEP 39 - FORT ASSEMBLY

QTY	PART NUMBER	DESCRIPTION
4	H100382	SCREW PFH 8x1 3/4 BLK
4	H100391	SCREW PFH 8x2 BLK

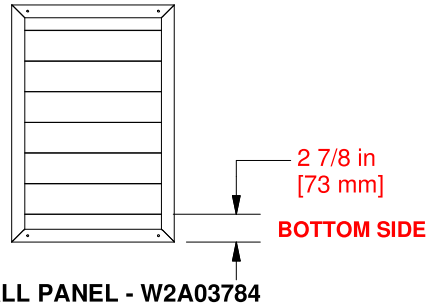

WP04 **WALL PANEL - W2A03784**
(x2) *1"x16 7/8"x24 5/8" (24x430x627)*

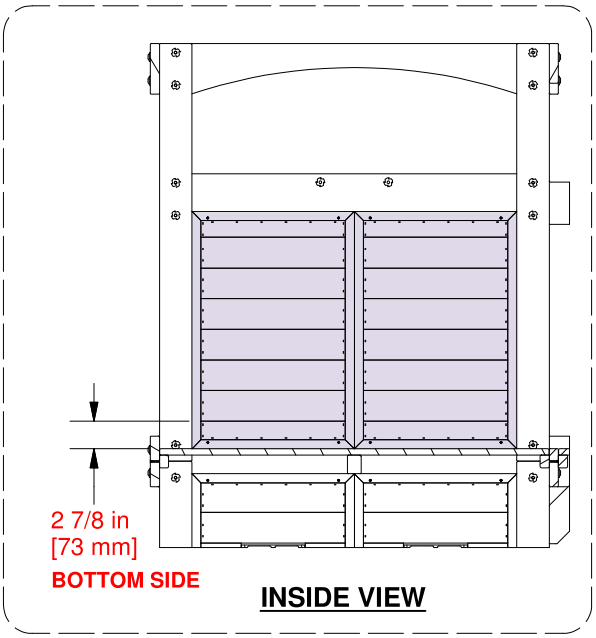

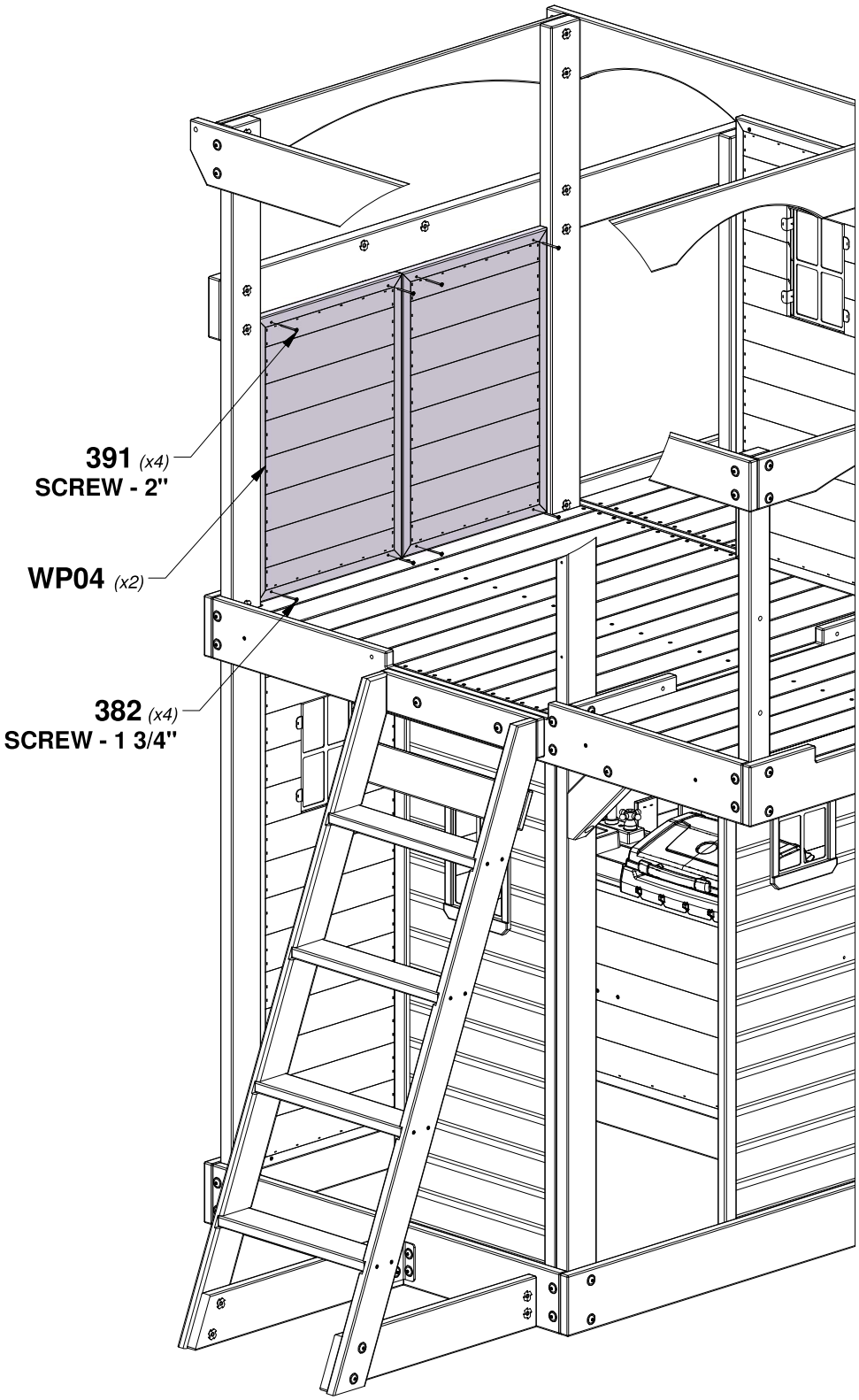

STEP 40 - FORT ASSEMBLY

QTY	PART NUMBER	DESCRIPTION
6	H100382	SCREW PFH 8x1-3/4 BLK
2	H100398	T-NUT 1/4 BLK
2	H100405	WASHER LOCK EXT 6x15 BLK
2	H101026	BOLT WH 1/4x1-3/4 BLK

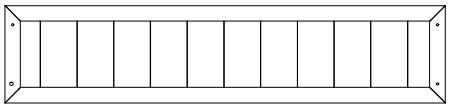

WP03 **WALL PANEL - W2A03786**
(x1) *1"x18 7/8"x11 3/4" (24x214x971)*

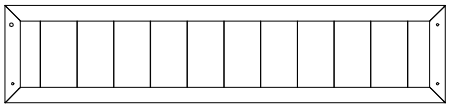

WP08 **WALL PANEL - W2A03787**
(x1) *1"x18 7/8"x11 3/4" (24x214x971)*

TIP:
INSTALL T-NUTS IN WOOD FIRST

WP08 *(x1)*

WP03 *(x1)*

382 *(x6)*
SCREW - 1 3/4"

405 *(x2)*
WASHER - 6x15

026 *(x2)*
BOLT - 1-3/4"

398 *(x2)*
T-NUT - 1/4"

STEP 41 - FORT ASSEMBLY

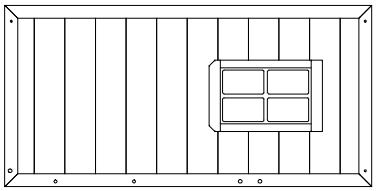

WP05 **WALL PANEL - W2A03785**
(x1) *1"x16 7/8"x46 1/2" (24x479x971)*

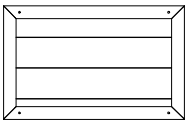

WP06 **WALL PANEL - W2A03780**
(x1) *1"x18 7/8"x11 3/4" (24x479x300)*

QTY	PART NUMBER	DESCRIPTION
2	H100198	WASHER LOCK EXT 8x19 BLK
2	H100378	BOLT WH 5/16x1 3/4 BLK
2	H100379	T-NUT 5/16 BLK
7	H100382	SCREW PFH 8x1-3/4 BLK
1	H100398	T-NUT 1/4 BLK
1	H100405	WASHER LOCK EXT 6x15 BLK
1	H101026	BOLT WH 1/4x1-3/4 BLK

TIP:
INSTALL T-NUTS IN WOOD FIRST

378 *(x2)*
BOLT - 1 3/4"

198 *(x2)*
WASHER - 8x19

379 *(x2)*
T-NUT - 5/16"

026 *(x1)*
BOLT - 1-3/4"

405 *(x1)*
WASHER - 6x15

398 *(x1)*
T-NUT - 1/4"

WP05 *(x1)*

FLUSH TOPS

WP06 *(x1)*

382 *(x7)*
SCREW - 1 3/4"

STEP 42 - FORT ASSEMBLY

QTY	PART NUMBER	DESCRIPTION
32	H100387	SCREW PFH 8x1-1/4 BLK

N02 *(x8)* **PICKET - W4L18514**
5/8"x2 3/8"x24 3/4" (16x60x628)

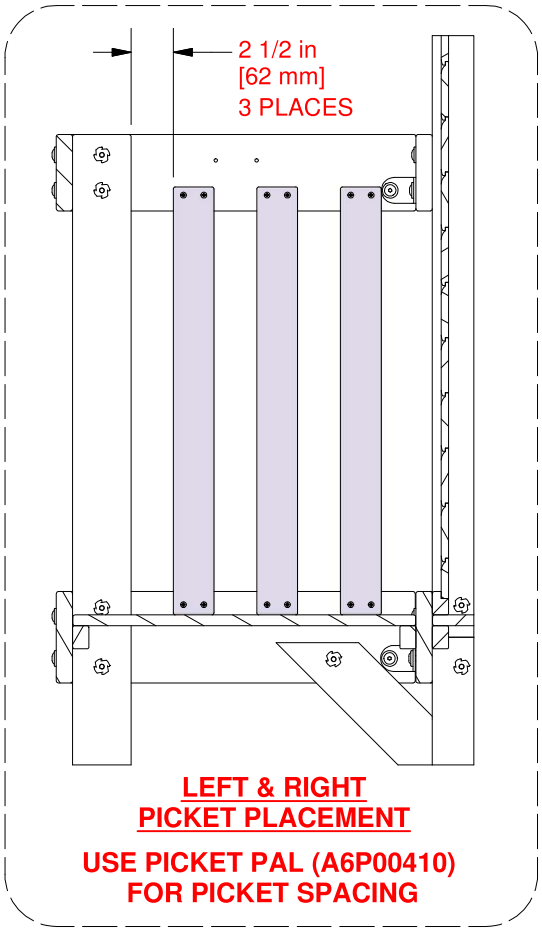

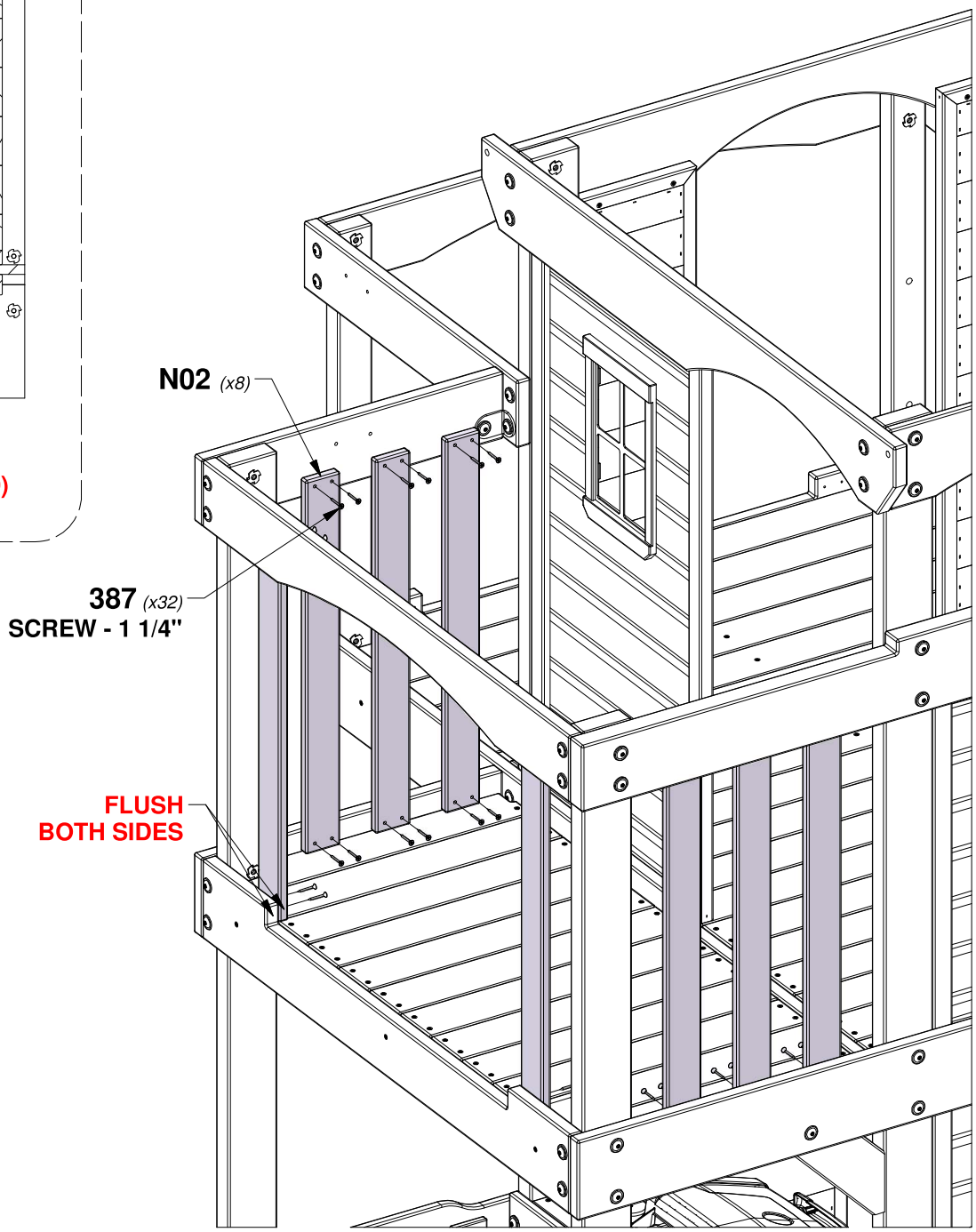

STEP 43 - FORT ASSEMBLY

QTY	PART NUMBER	DESCRIPTION
40	H100387	SCREW PFH 8x1-1/4 BLK

N02 *(x10)* **PICKET - W4L18514**
5/8"x2 3/8"x24 3/4" (16x60x628)

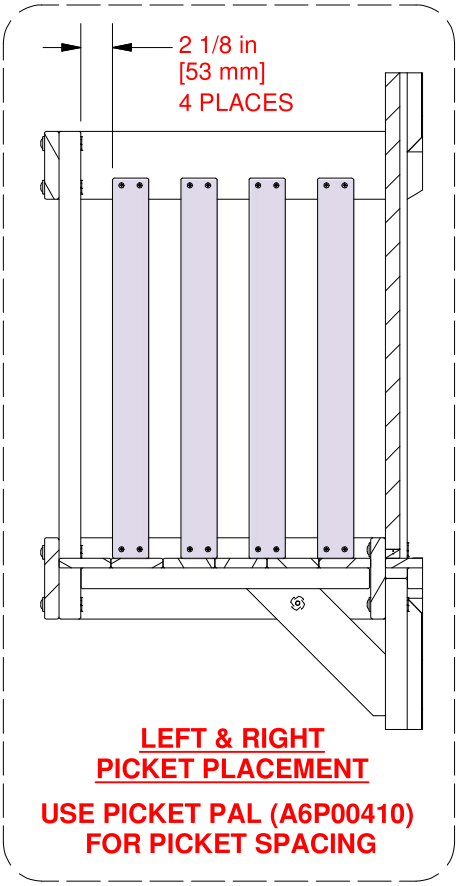

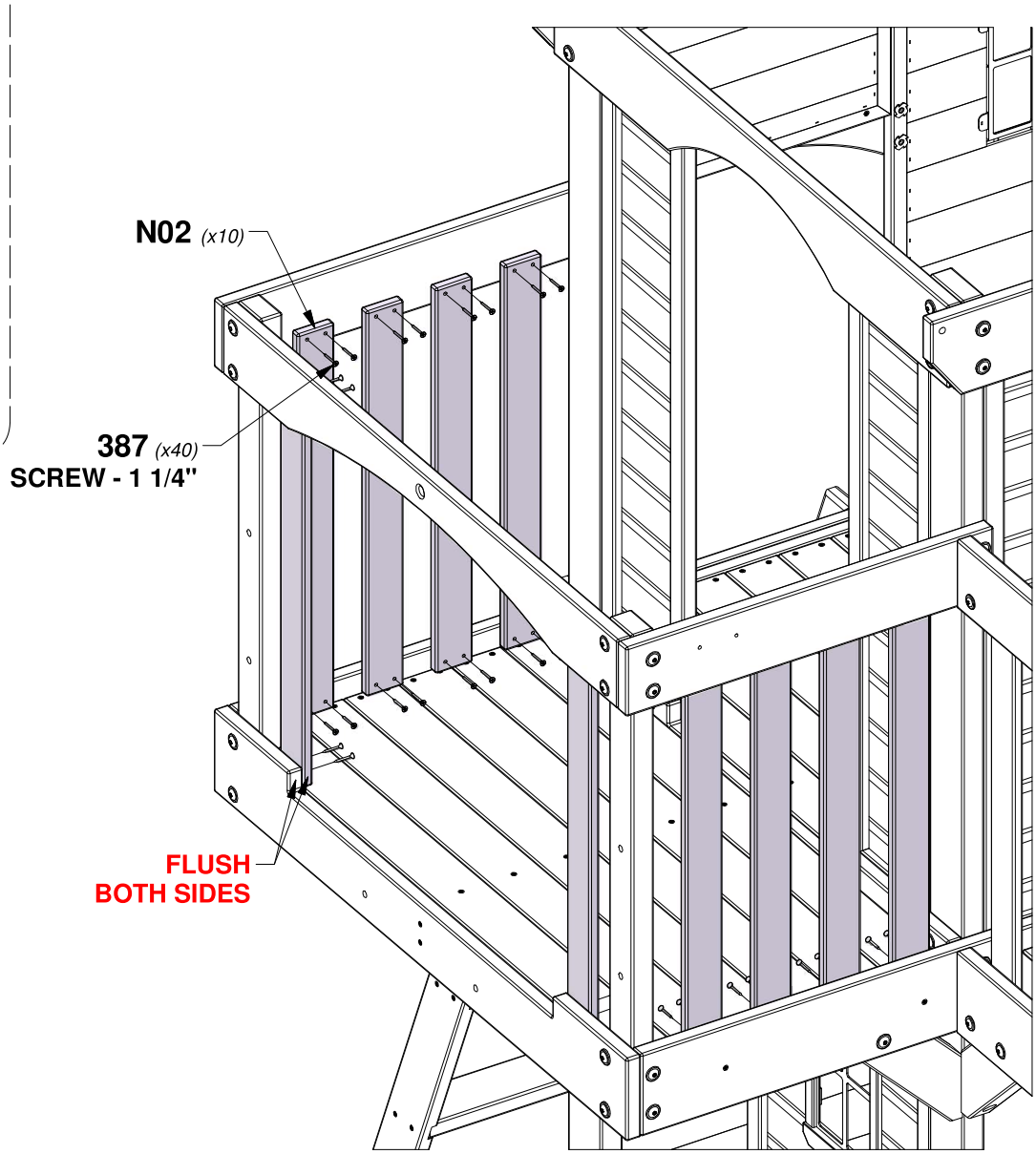

STEP 44 - FORT ASSEMBLY

QTY	PART NUMBER	DESCRIPTION
2	H100198	WASHER LOCK EXT 8x19 BLK
2	H100379	T-NUT 5/16 BLK
2	H100407	BOLT WH 5/16x1 1/2 BLK
6	H100408	SCREW PWH 8x1/2 BLK

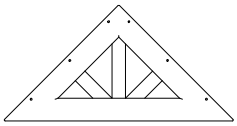

A6P00836 *(x1)* **PLASTIC SUNBURST**

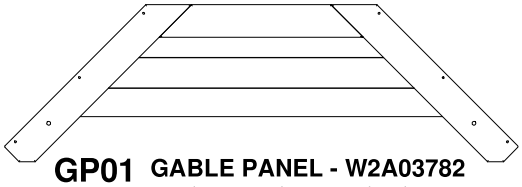

GP01 *(x1)* **GABLE PANEL - W2A03782**
1 1/8"x53 1/2"x16 3/8" (27x1359x414)

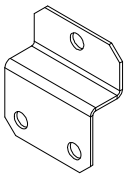

A4M02676 *(x2)* **BRACKET**

TIP:
INSTALL T-NUTS IN WOOD FIRST

407 *(x2)*
BOLT - 1 1/2"

198 *(x2)*
WASHER - 8x19

2676 *(x2)*
BRACKET

INSTALL BRACKET TO SUNBURST THEN PRE-DRILL USING AN 1/8" [3mm] DRILL BIT

836 *(x1)*
PLASTIC SUNBURST

408 *(x6)*
SCREW - 1/2"

379 *(x2)*
T-NUT - 5/16"

GP01 *(x1)*

STEP 45 - FORT ASSEMBLY

QTY	PART NUMBER	DESCRIPTION
2	H100198	WASHER LOCK EXT 8x19 BLK
2	H100379	T-NUT 5/16 BLK
2	H100407	BOLT WH 5/16x1 1/2 BLK
6	H100408	SCREW PWH 8x1/2 BLK

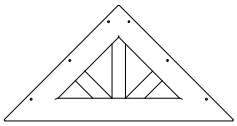

A6P00836 *(x1)* **PLASTIC SUNBURST**

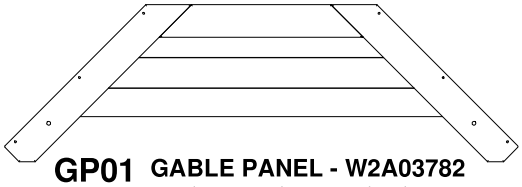

GP01 *(x1)* **GABLE PANEL - W2A03782**
1 1/8"x53 1/2"x16 3/8" (27x1359x414)

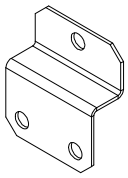

A4M02676 *(x2)* **BRACKET**

TIP:
INSTALL T-NUTS IN WOOD FIRST

2676 *(x1)*
BRACKET

INSTALL BRACKET TO SUNBURST THEN PRE-DRILL USING AN 1/8" [3mm] DRILL BIT

408 *(x6)*
SCREW - 1/2"

836 *(x1)*
PLASTIC SUNBURST

407 *(x2)*
BOLT - 1 1/2"

198 *(x2)*
WASHER - 8x19

379 *(x2)*
T-NUT - 5/16"

GP01 *(x1)*

STEP 46 - FORT ASSEMBLY

QTY	PART NUMBER	DESCRIPTION
12	H100347	SCREW PWH 8x1-1/4 WZ
4	H100382	SCREW PFH 8x1 3/4 BLK

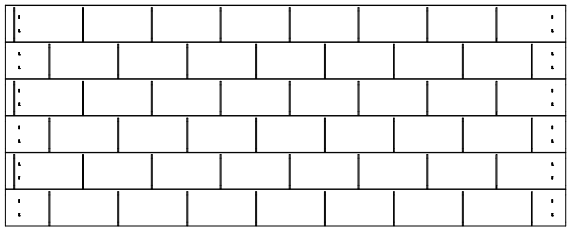

RP2 **TOP ROOF PANEL - W2A04025**
(x2) *1 3/8"x19 1/8"x48 5/8" (35x486x1236)*

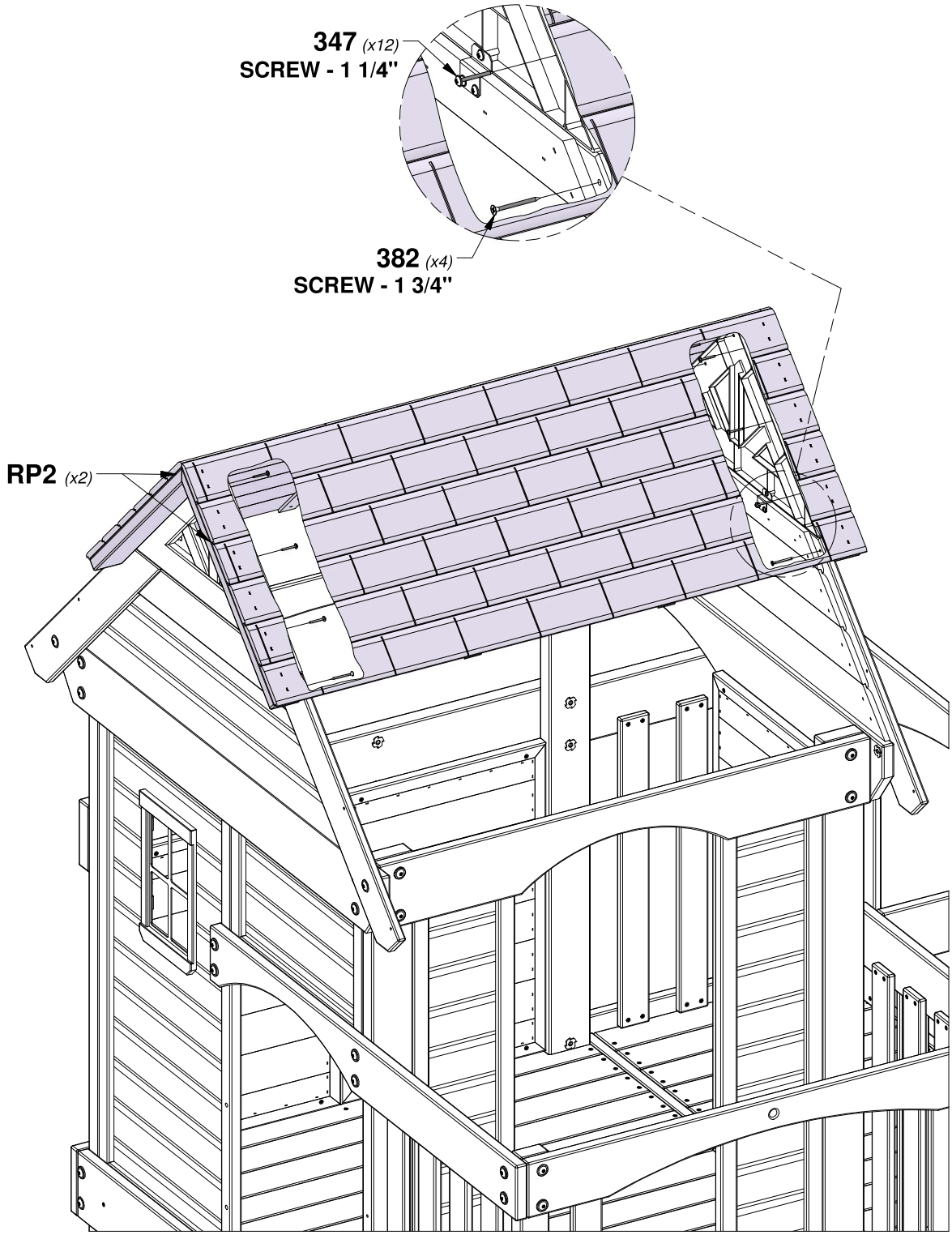

STEP 47 - FORT ASSEMBLY

QTY	PART NUMBER	DESCRIPTION
8	H100382	SCREW PFH 8x1 3/4 BLK

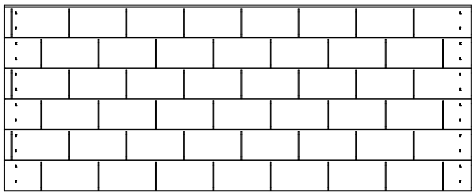

RP1 **LOWER ROOF PANEL - W2A04024**
(x2) *1 3/8"x19 3/8"x48 5/8" (35x491x1236)*

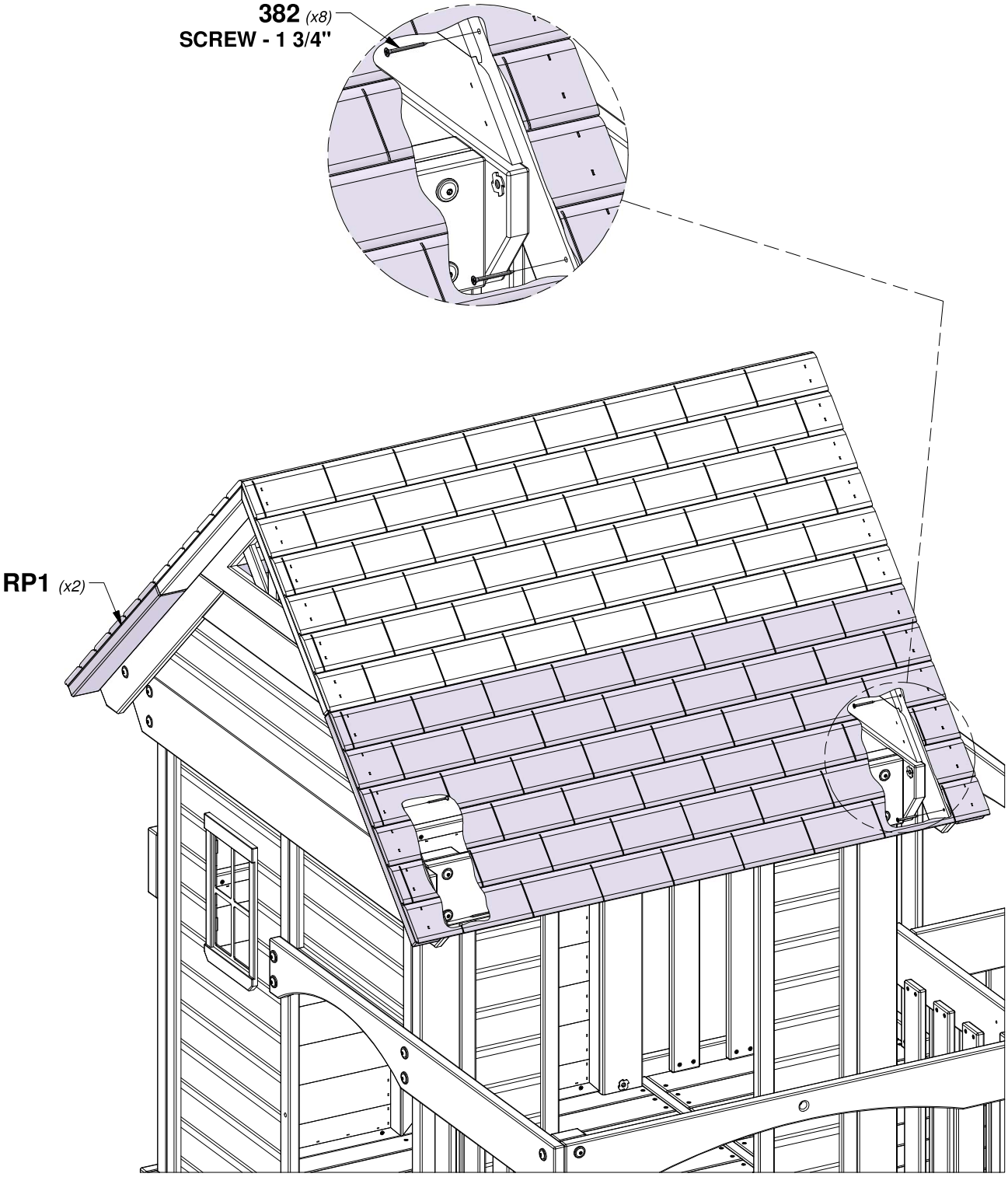

STEP 48 - FORT ASSEMBLY

QTY	PART NUMBER	DESCRIPTION
2	H100382	SCREW PFH 8x1 3/4 BLK
3	H100105	WASHER FLAT 8x27

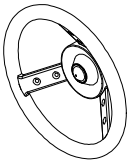

A6P00618 *(x1)* **STEERING WHEEL**

E12 *(x1)* **MOUNTING BLOCK - W4L17816**
1 3/8"x3"x4 3/4" (36x76x120)

TIP:
ALIGN PILOT HOLES

E12 *(x1)*

382 *(x2)*
SCREW - 1 3/4"

618 *(x1)*
STEERING WHEEL

WASHER FLAT *(x1)*
(INCLUDED WITH STEERING WHEEL)

LAG SCREW *(x1)*
(INCLUDED WITH STEERING WHEEL)

CENTER CAP *(x1)*
(INCLUDED WITH STEERING WHEEL)

NOTE PILOT HOLE LOCATIONS

105 *(x3)*
WASHER - 8x27

STEP 49 - FORT ASSEMBLY

QTY	PART NUMBER	DESCRIPTION
2	H100382	SCREW PFH 8x1 3/4 BLK
2	H100387	SCREW PFH 8x1-1/4 BLK

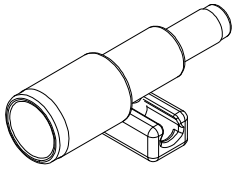

A6P00596 *(x1)* **TELESCOPE**

HOLES TOWARD RAIL

E10 *(x1)* **MOUNTING BLOCK - W4L17815**
1 3/8"x3"x4 3/4" (36x76x120)

TIP:
ALIGN PILOT HOLES

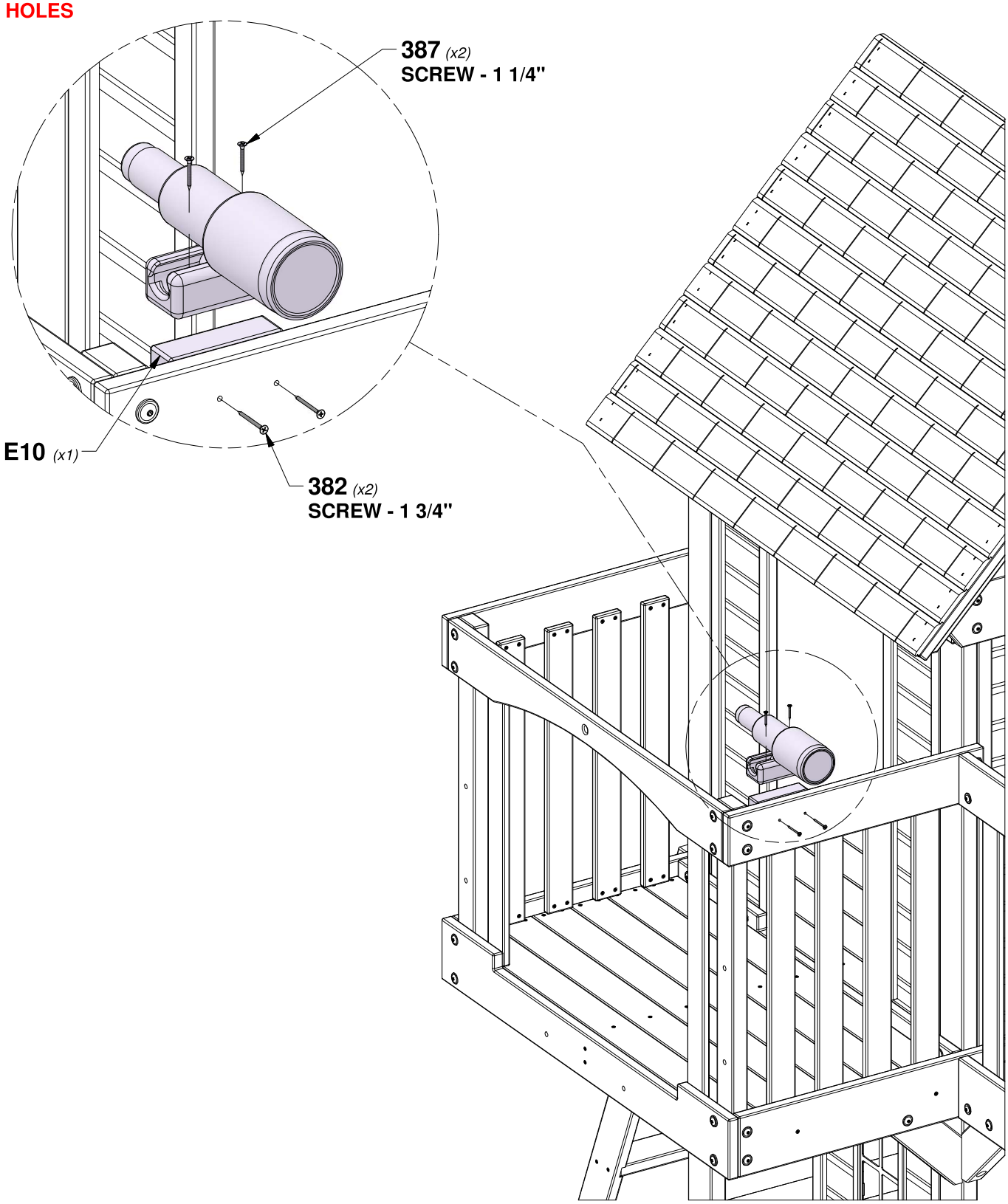

STEP 50 - FORT ASSEMBLY

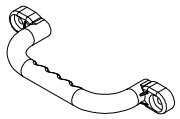

A6P00654 *(x4)* **HAND GRIP GREY PLASTIC**

QTY	PART NUMBER	DESCRIPTION
2	H100397	BOLT WH 1/4x1-1/4 BLK
6	H100398	T-NUT 1/4 BLK
2	H100403	LAG SCREW WH 1/4x1-1/2 BLK
8	H100405	WASHER LOCK EXT 6x15 BLK
4	H101026	BOLT WH 1/4x1-3/4 BLK

TIP:
INSTALL T-NUTS IN WOOD FIRST

654 *(x4)*
HAND GRIP GREY PLASTIC

398 *(x6)*
T-NUT - 1/4"

405 *(x8)*
WASHER - 6x15

026 *(x4)*
BOLT - 1-3/4"

397 *(x2)*
BOLT - 1 1/4"

403 *(x2)*
LAG SCREW - 1 1/2"

STEP 51 - FORT ASSEMBLY

QTY	PART NUMBER	DESCRIPTION
8	H100202	SCREW PWH 8x5/8 BLK

TOP

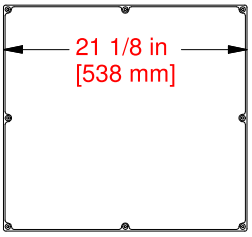

A6P00324 *(x1)* **CHALK BOARD LARGE**

TIP:
CENTER CHALK BOARD ON WALL AS SHOWN.

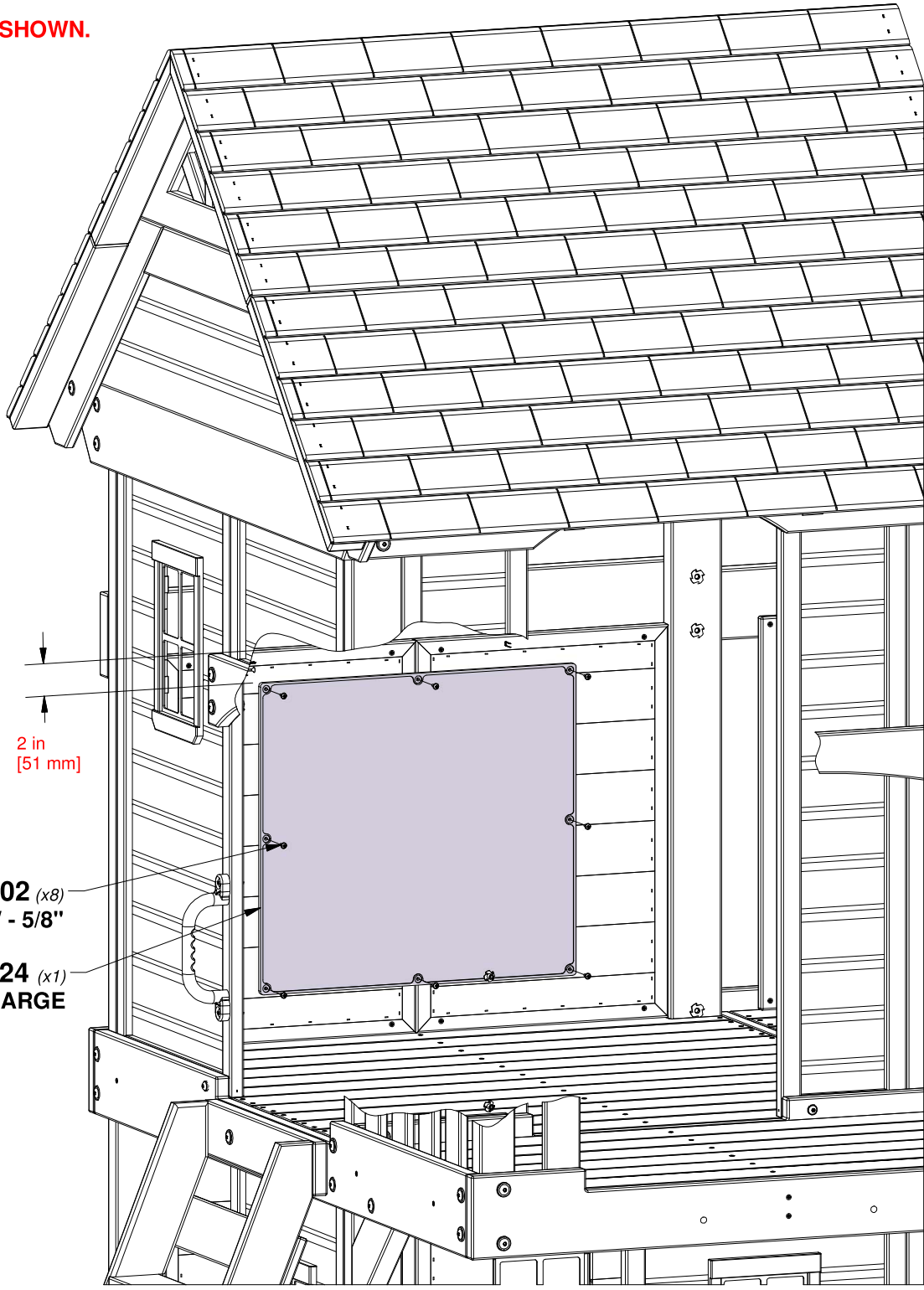

STEP 1 - FINAL ASSEMBLY

QTY	PART NUMBER	DESCRIPTION
2	H100198	WASHER LOCK EXT 8x19 BLK
2	H100378	BOLT WH 5/16x1 3/4 BLK

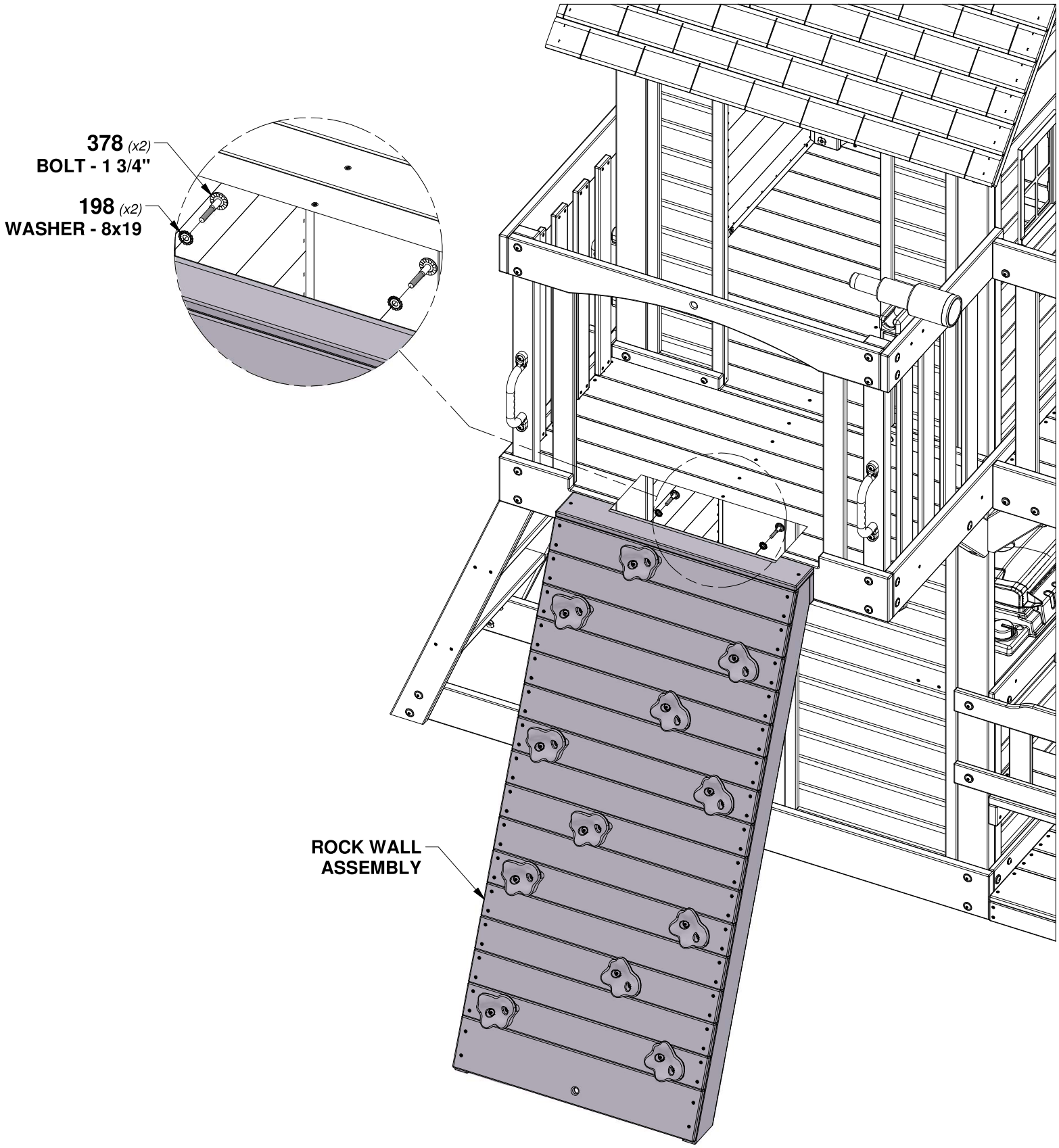

STEP 2 - FINAL ASSEMBLY

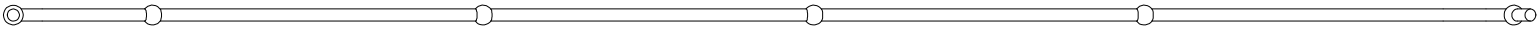

A6P00537 *(x1)* **CLIMBING ROPE**

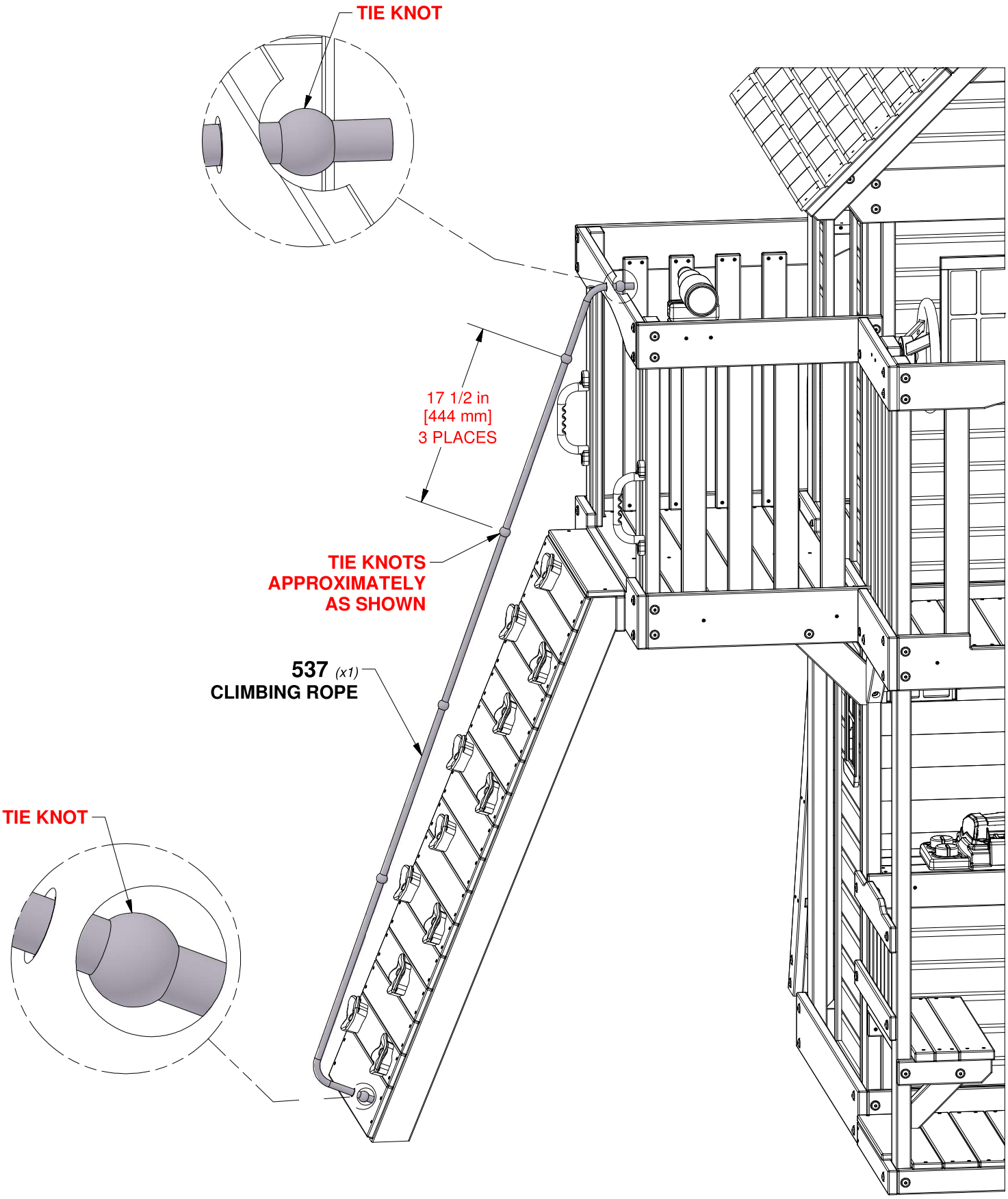

STEP 3 - FINAL ASSEMBLY

QTY	PART NUMBER	DESCRIPTION
2	H100379	T-NUT 5/16 BLK
2	H100468	BOLT WH 5/16x1 BLK

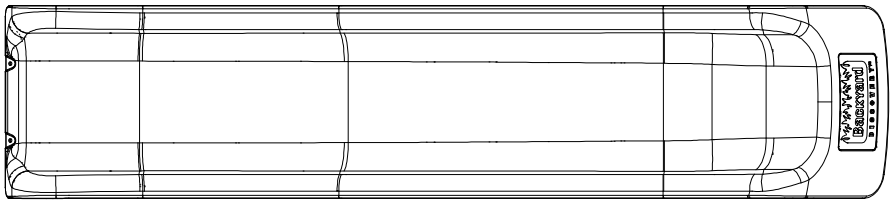

A6P00554 *(x1)* **8' BLOW MOLDED SLIDE - GREY**

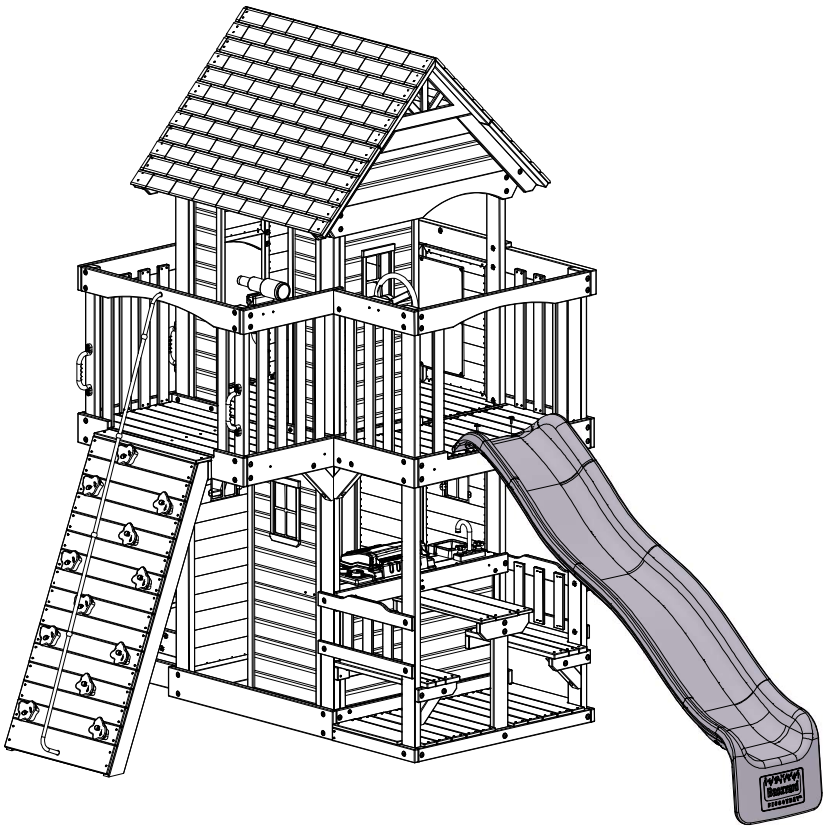

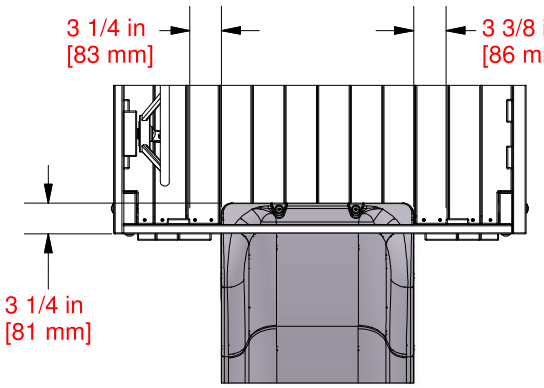

LOCATE SLIDE IN OPENING USING DIMENSIONS SHOWN. USING SLIDE AS A TEMPLATE, DRILL (2) 3/8" [10 mm] HOLES THROUGH DECK. FINISH BY INSTALLING SLIDE USING PROVIDED HARDWARE.

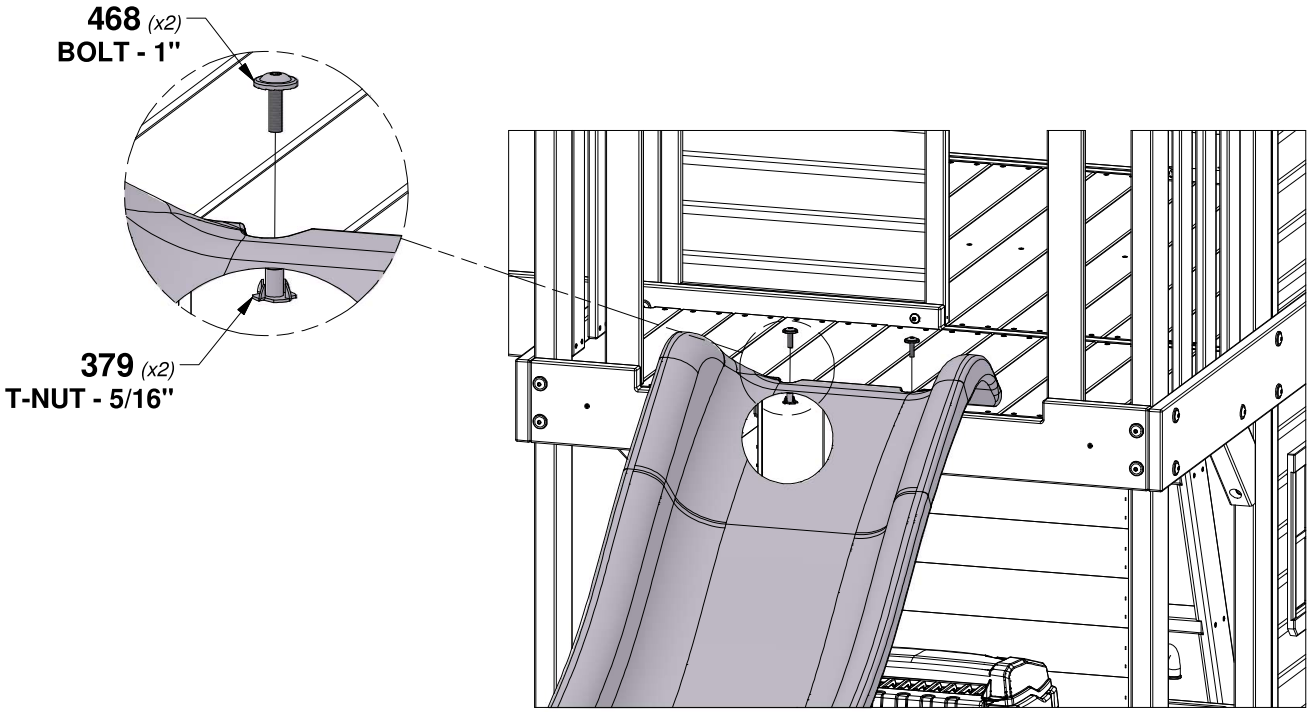

STEP 4 - FINAL ASSEMBLY

QTY	PART NUMBER	DESCRIPTION
4	H100477	WASHER SPLIT 5/16 BLK
4	H100478	WASHER FLAT 8x27 BLK
4	H100498	BOLT HEX 5/16x1-1/2 - BLK

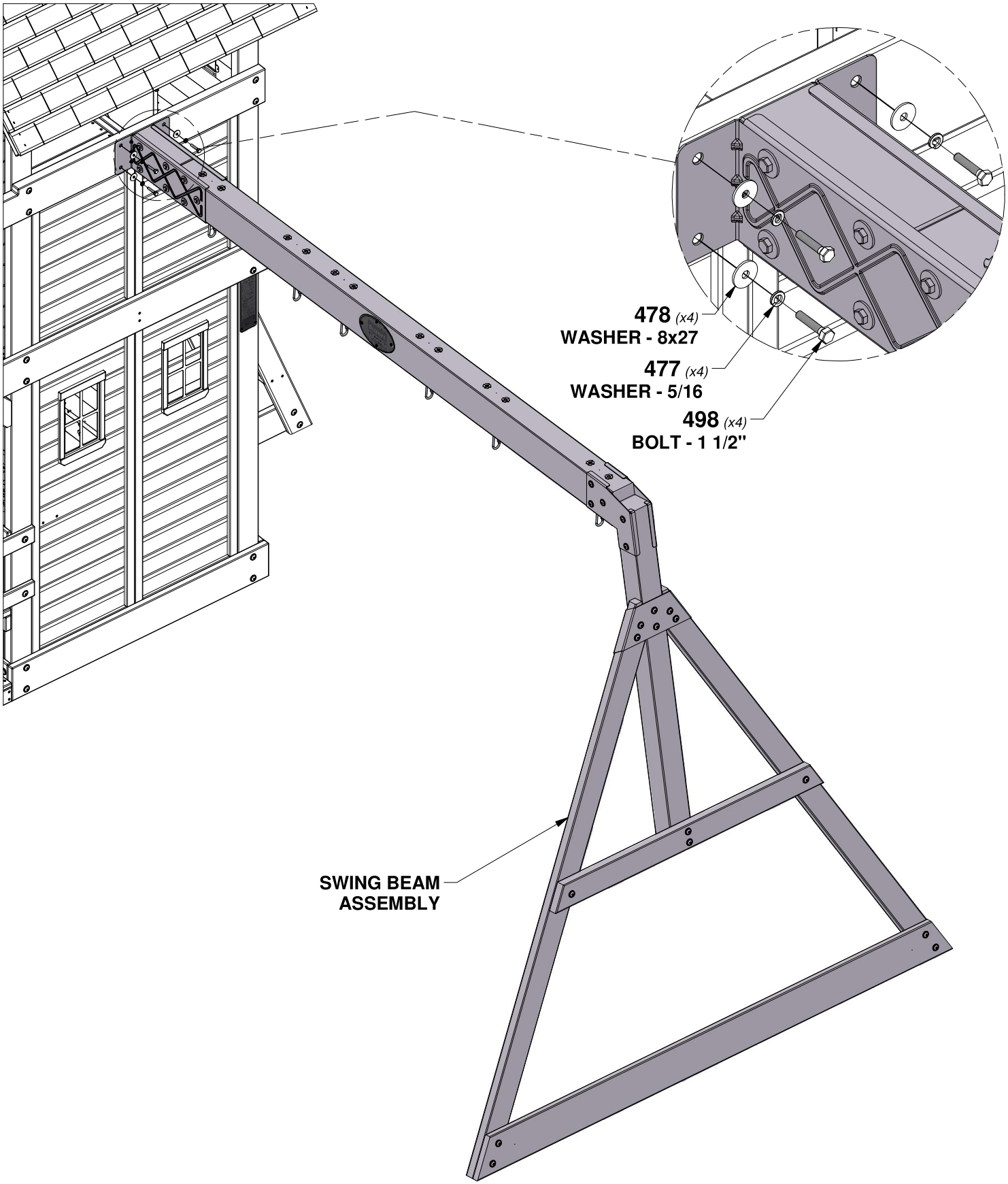

STEP 1 - WEB SWING ASSEMBLY

QTY	PART NUMBER	DESCRIPTION
4	H100831	NUT BARREL PTH BLK 1/4x3/4
4	H100832	BOLT PTH 1/4x3/4

IMPORTANT: SLIDE ROPE LOOPS OVER TUBE ENDS FIRST!

SLIDE NARROW END OF TUBES INTO LARGER OPENING AFTER SLIDING ROPE LOOPS ONTO TUBES.

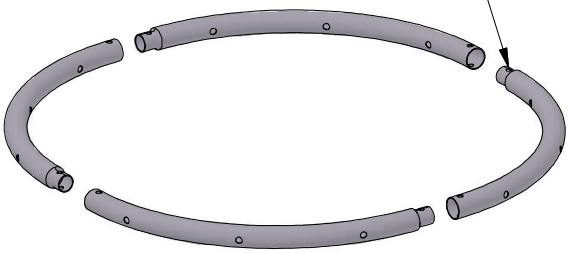

NOTE: ROPE WEBBING NOT SHOWN IN ILLUSTRATION FOR CLARITY.

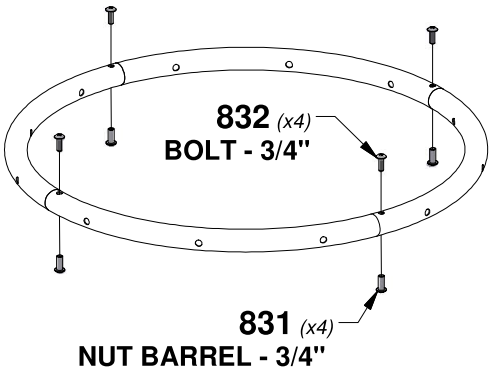

NOTE: IT IS IMPORTANT THAT THE WEB SWING HANG LEVEL.

TO ENSURE STRAIGHT SWINGING MOTION, ADJUST BOTH "S" BRACKETS UNTIL WEB SEAT IS LEVEL.

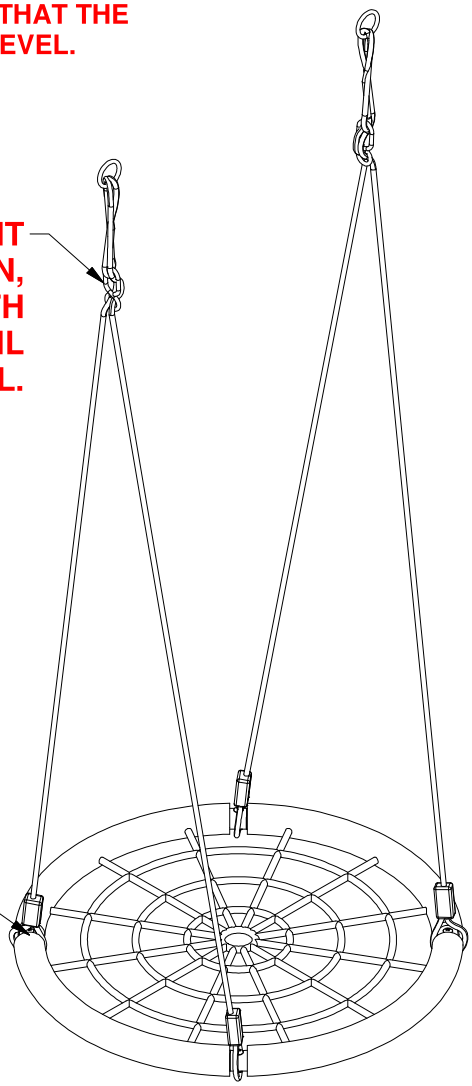

SWING MUST BE SET AT A MINIMUM OF 8 INCHES OFF THE GROUND WHEN INSTALLED.

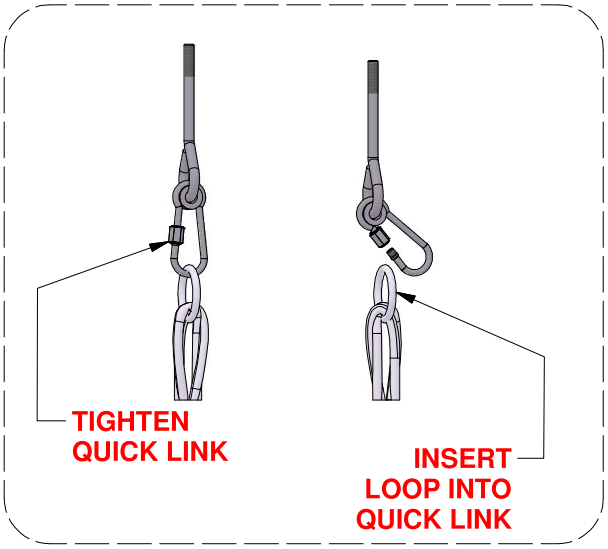

STEP 5 - FINAL ASSEMBLY

A4M02256 *(x4)* CHAIN BLACK 51.25"

A6P00595 *(x2)* SWING SEAT GREY 22"

A4M00633 *(x4)* QUICK LINK BLK

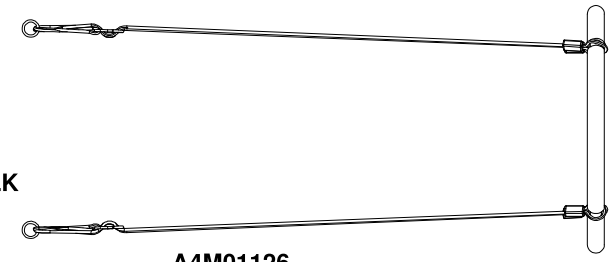

A4M01126 *(x1)* 26" WEB SWING

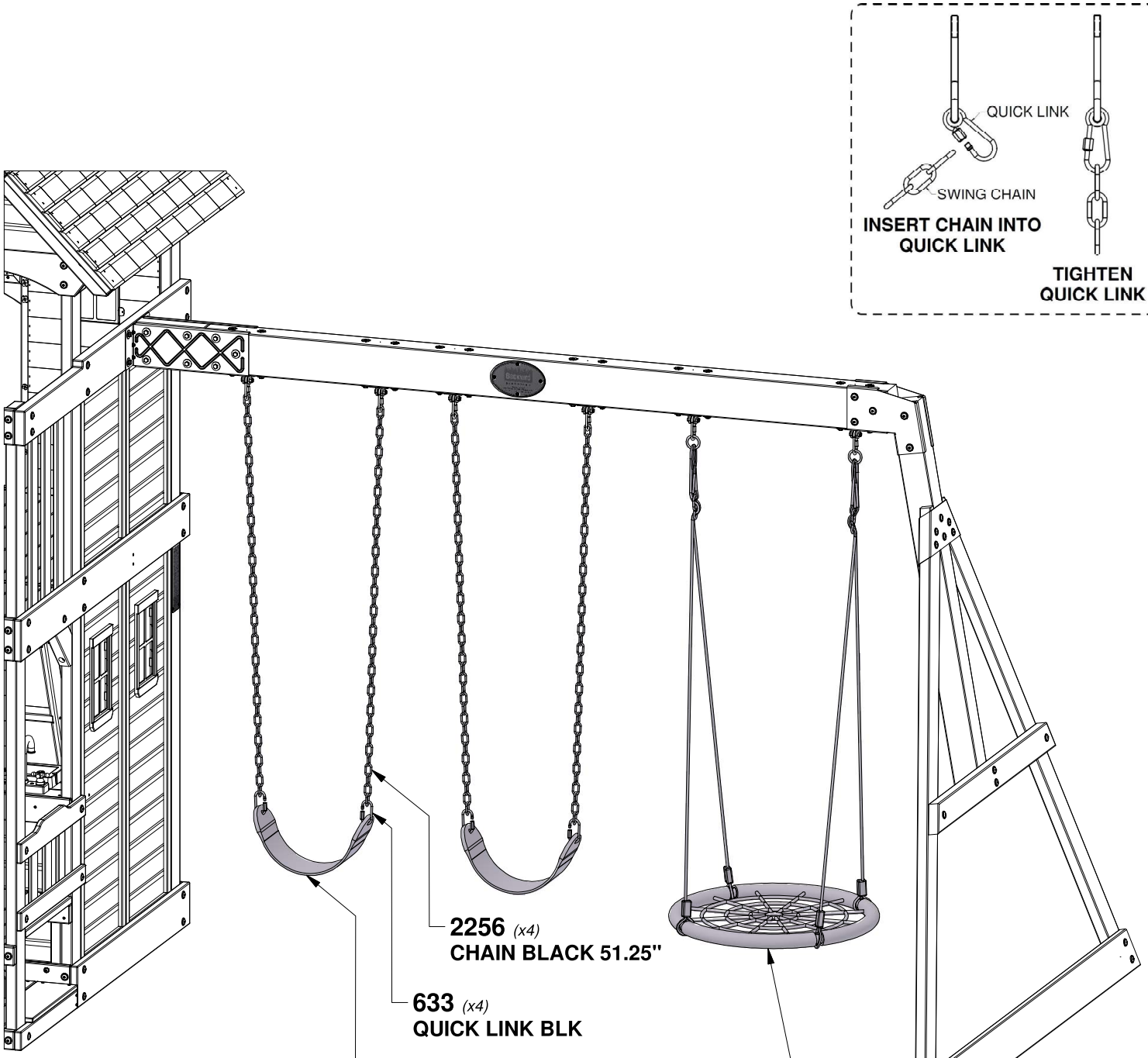

STEP 6 - FINAL ASSEMBLY

QTY	PART NUMBER	DESCRIPTION
6	H100379	T-NUT 5/16 BLK
6	H100459	BOLT WH 5/16x1 1/4 BLK

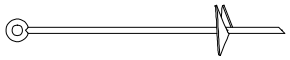

A4M02252 *(x6)* **AUGER GROUND STAKE**
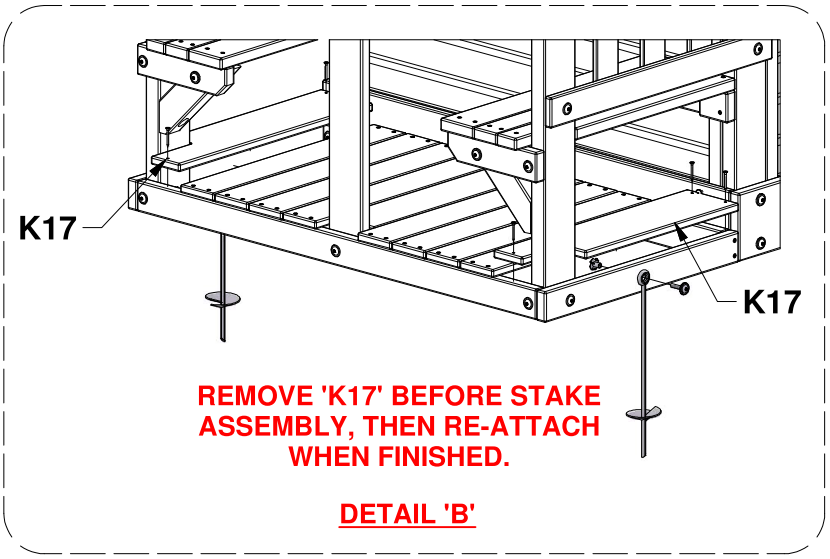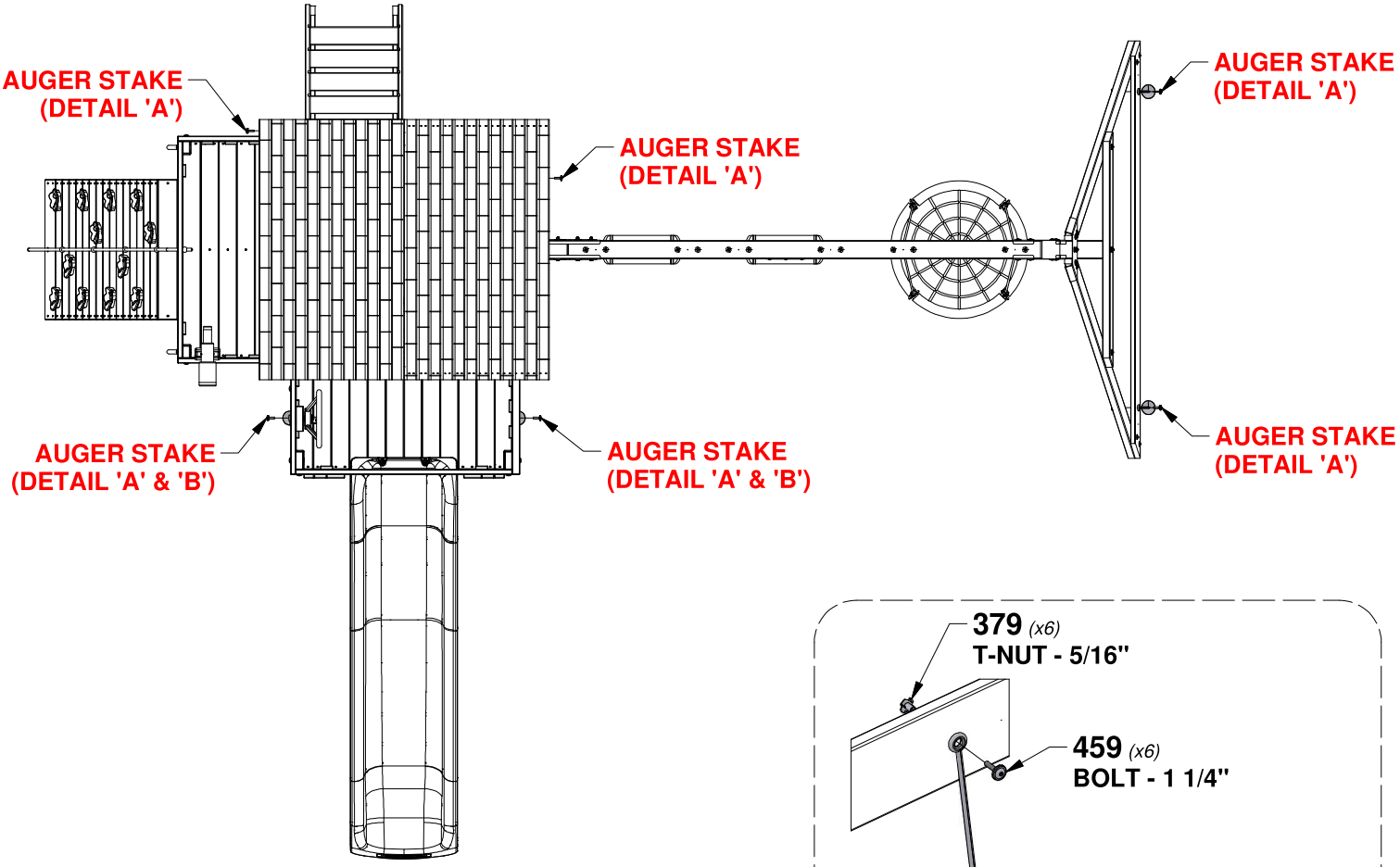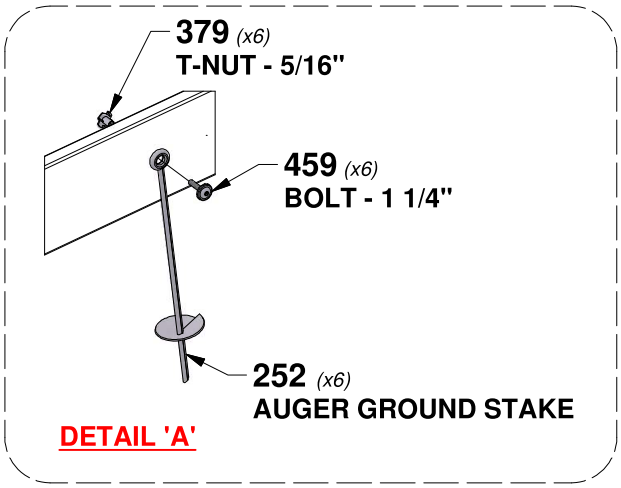
TWIST GROUND STAKE INTO GROUND AT LOCATIONS SHOWN. USING AUGER STAKE AS A GUIDE, DRILL A 3/8" [10mm] HOLE FOR HARDWARE.