Item #1005614290
1005540317
1005540310
Model #725.1174.000

HAMPTON BAY®

USE AND CARE GUIDE

BRAXTON PARK LEFT ARM LOVESEAT

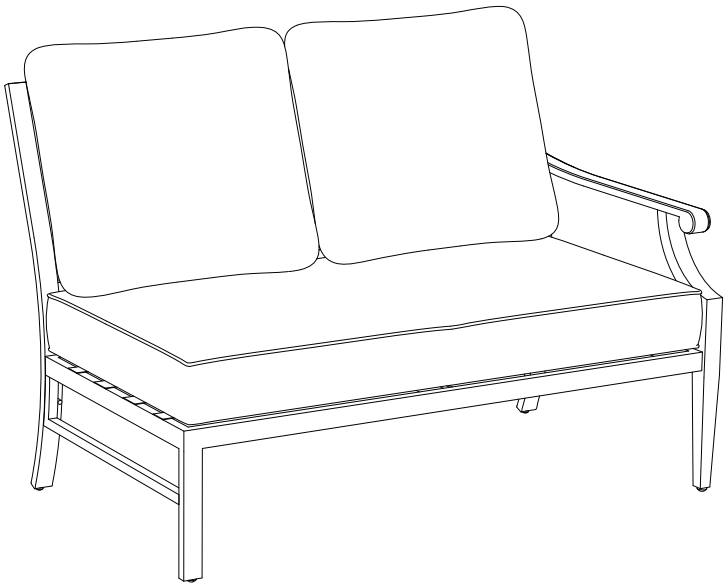

THANK YOU

We appreciated the trust and confidence you have placed in Hampton Bay through the purchase of this chair. We strive to continually create quality products designed to enhance your home. Visit us online to see our full line of products available for your home improvement needs. Thank you for choosing Hampton Bay!

Table of Contents

Table of Contents **2**
Safety Information 2
Warranty **2**
What is covered 2
What is not covered 2
Pre-Assembly **3**
Planning Assembly 3
Hardware Included 3
Chair Package Contents 4
Assembly **5**
Care and Cleaning **6**

Important Safety Instructions

SAVE THESE INSTRUCTIONS

CAUTION: Read all of the instructions in this manual before you begin assembly. Failure to do so may result in faulty assembly and potential injury!

READ ALL INSTRUCTIONS BEFORE USE

To reduce the risk of injury to persons:

1. Close supervision is necessary when this furnishing is used by or near children, or disabled persons, if applicable.
2. Use this furnishing only for its intended use as described in these instructions. Do not use attachments not recommended by the manufacturer.

Warranty

3 YEAR WARRANTY

WHAT IS COVERED

We warrant the product to be free of manufacturing defects to the original purchaser for three years.

WHAT IS NOT COVERED

It remains the customer's responsibility for freight and packaging charges to and from our service center. This warranty does not cover commercial use, hardware, acts of nature, freezing, or abusive use. In addition, purchased parts are not covered under this warranty.

We reserve the right to make substitutions with similar merchandise, if the model in question is no longer in production.

Contact Customer Care at 1-800-841-1350 or visit www.hamptonbay.com.

Pre-Assembly

PLANNING ASSEMBLY

Please read this entire instruction manual prior to assembly.

Identify all parts packed in the carton against the parts list. Remove all protective materials and place the parts on a non-abrasive surface to avoid scratching.

NOTE: More than one person may be required to assemble this product.

HARDWARE INCLUDED

NOTE: Hardware not shown to actual size.

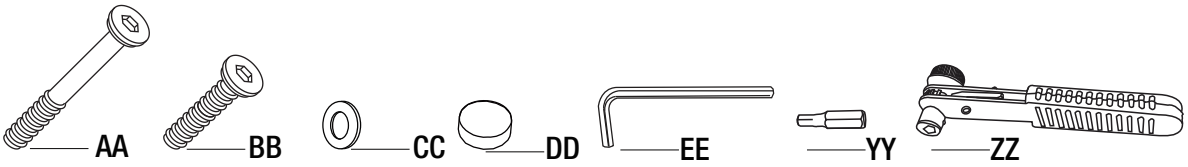

Part	Description	Quantity
AA	M6x55 bolt	2
BB	M6x35 bolt	5
CC	Washer	7
DD	Bolt cap	7
EE	Allen driver	1
YY	Hex. screw (6 mm)	1
ZZ	Ratchet wrench	1

NOTE: Part YY + ZZ are additional tools, same function as part EE, but more easier to use.

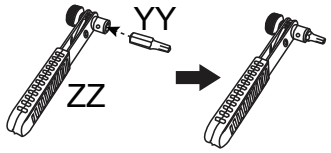

Use the screw (YY) and wrench (ZZ).

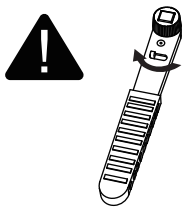

Tighten the screws.



Loosen the screws.

Pre-Assembly

CHAIR PACKAGE CONTENTS

IMPORTANT: Do not fully tighten bolts/screws until all pieces are loosely assembled.

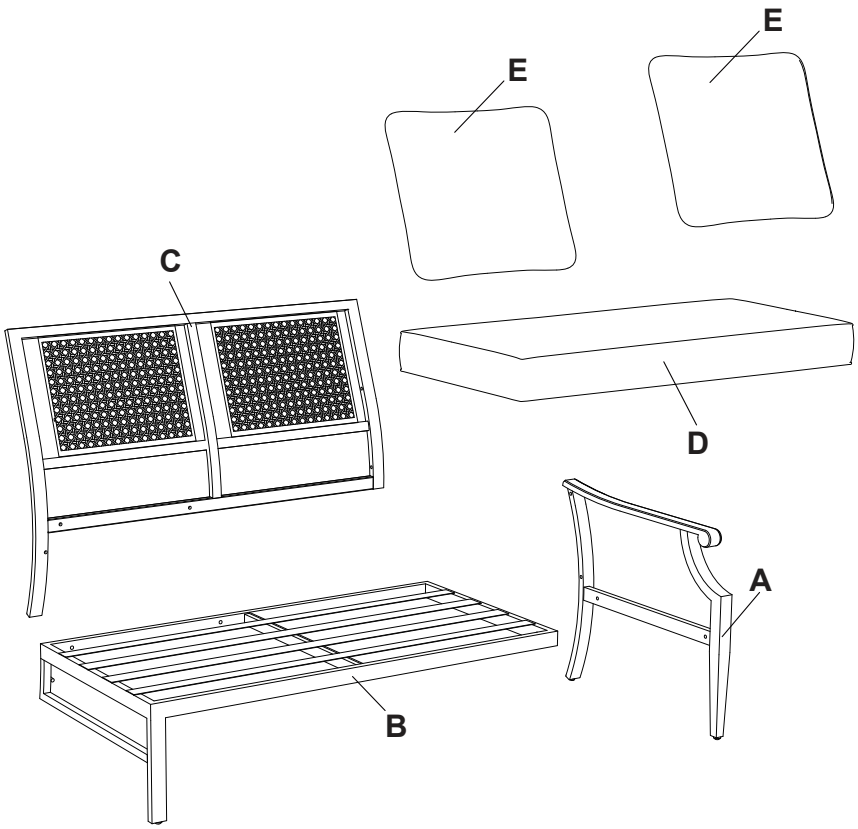

Part	Description	Quantity
A	Left arm	1
B	Chair seat	1
C	Chair back	1
D	Seat cushion	1
E	Back cushion	2

Assembly

1 Attach the left arm to the chair seat

□ Attach the left arm (A) to the chair seat (B) using M6 bolts (BB) and washers (CC).

NOTE: Please ensure all the bolts are assembled correctly and use the allen driver (EE) to tighten. Do not fully tighten bolts/screws until all pieces are loosely assembled. Add corresponding plastic caps (DD) after final assembly finished.

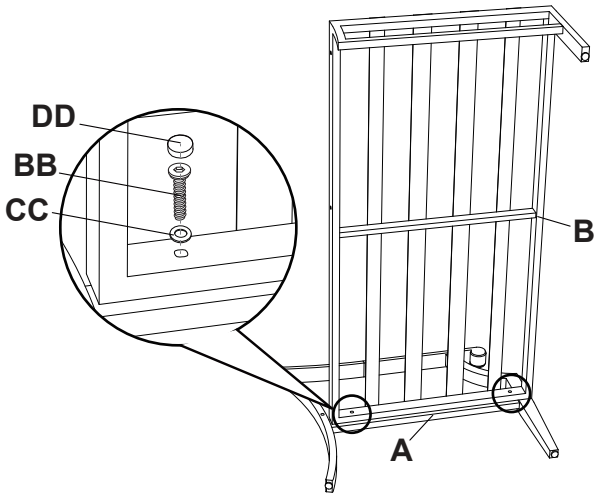

2 Attach the chair back to the chair seat

□ Attach the chair back (C) to the chair seat (B) using M6 bolts (BB) and washers (CC).

NOTE: Please ensure all the bolts are assembled correctly and use the allen driver (EE) to tighten. Do not fully tighten bolts/screws until all pieces are loosely assembled. Add corresponding plastic caps (DD) after final assembly finished.

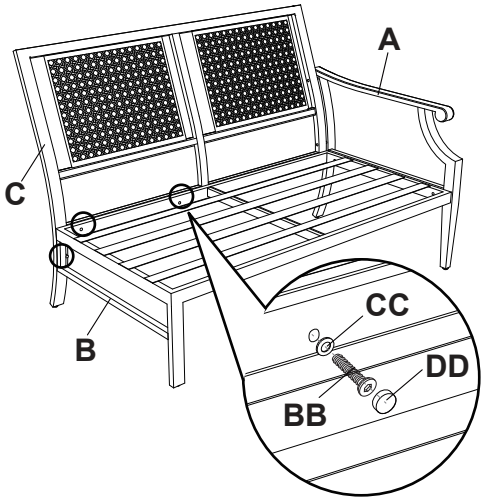

3 Attach the left arm to the chair back

□ Attach the left arm (A) to the chair back (C) using M6 bolts (AA) and washers (CC).

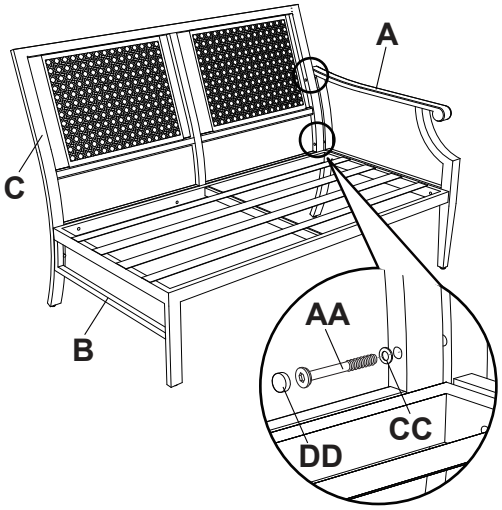

4 Add cushions

□ Add the seat cushion (D) and back cushion (E) on the chair.

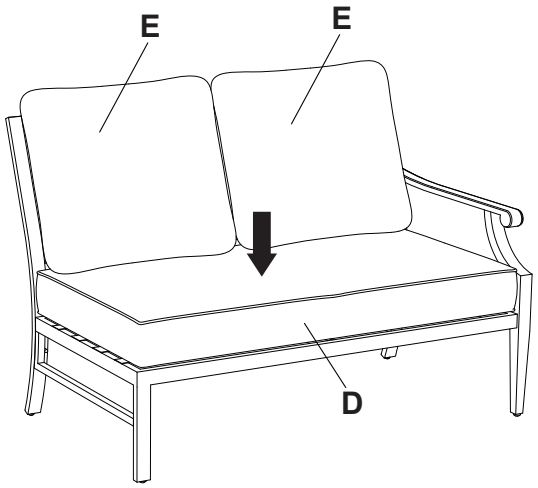

Care and Cleaning

- Do not allow water to build up in the frames. This will cause corrosion and possible freezing damage in cold climates.
- Use a mild soap and water for normal cleaning. Do not use janitorial or alcohol based cleaners. Some cleaners may be marked as natural, but some ingredients may cause discoloration or have an adverse reaction to your finish.
- Rinse with clean water and dry with a soft, absorbent cloth towel.
- Treat the frames with a liquid wax for maximum protection against UV rays and/or salty, damp air.
- Furniture covers are a great way to protect your investment from harsh elements of weather and UV light. However, it is important to ensure the furniture and covers are free of moisture and debris before covering. It is also necessary to promptly uncover furniture after precipitation and during periods of high humidity to prevent moisture build up. Failure to do so can lead to permanent surface and finish damage, which is not covered under warranty.

HAMPTON BAY®

Questions, problems, missing parts? Before returning to the store,
call Hampton Bay Customer Service
8 a.m. – 7 p.m., EST, Monday – Friday, 9 a.m. – 6 p.m., EST, Saturday

1-800-841-1350

HAMPTONBAY.COM

Retain this manual for future use.

Item #1005614290
1005540317
1005540310
Model #725.1173.000

HAMPTON BAY®

USE AND CARE GUIDE

BRAXTON PARK RIGHT ARM LOVESEAT

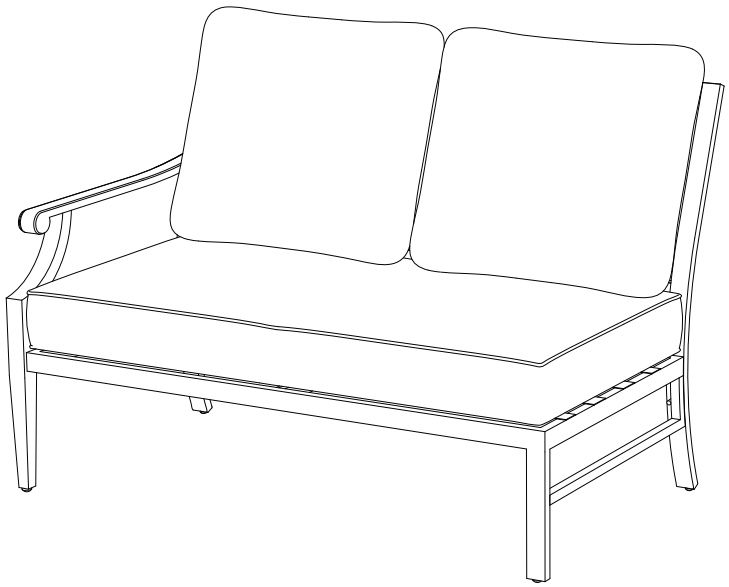

THANK YOU

We appreciated the trust and confidence you have placed in Hampton Bay through the purchase of this chair. We strive to continually create quality products designed to enhance your home. Visit us online to see our full line of products available for your home improvement needs. Thank you for choosing Hampton Bay!

Table of Contents

Table of Contents **2**
Safety Information 2
Warranty **2**
What is covered 2
What is not covered 2
Pre-Assembly **3**
Planning Assembly 3
Hardware Included 3
Chair Package Contents 4
Assembly **5**
Care and Cleaning **6**

Important Safety Instructions

SAVE THESE INSTRUCTIONS

CAUTION: Read all of the instructions in this manual before you begin assembly. Failure to do so may result in faulty assembly and potential injury!

READ ALL INSTRUCTIONS BEFORE USE

To reduce the risk of injury to persons:

1. Close supervision is necessary when this furnishing is used by or near children, or disabled persons, if applicable.
2. Use this furnishing only for its intended use as described in these instructions. Do not use attachments not recommended by the manufacturer.

Warranty

3 YEAR WARRANTY

WHAT IS COVERED

We warrant the product to be free of manufacturing defects to the original purchaser for three years.

WHAT IS NOT COVERED

It remains the customer's responsibility for freight and packaging charges to and from our service center. This warranty does not cover commercial use, hardware, acts of nature, freezing, or abusive use. In addition, purchased parts are not covered under this warranty.

We reserve the right to make substitutions with similar merchandise, if the model in question is no longer in production.

Contact Customer Care at 1-800-841-1350 or visit www.hamptonbay.com.

Pre-Assembly

PLANNING ASSEMBLY

Please read this entire instruction manual prior to assembly.

Identify all parts packed in the carton against the parts list. Remove all protective materials and place the parts on a non-abrasive surface to avoid scratching.

NOTE: More than one person may be required to assemble this product.

HARDWARE INCLUDED

NOTE: Hardware not shown to actual size.

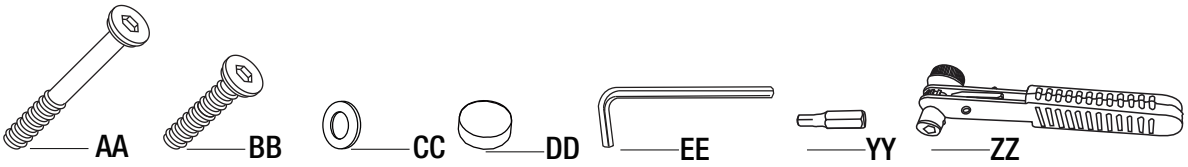

Part	Description	Quantity
AA	M6x55 bolt	2
BB	M6x35 bolt	5
CC	Washer	7
DD	Bolt cap	7
EE	Allen driver	1
YY	Hex. screw (6 mm)	1
ZZ	Ratchet wrench	1

NOTE: Part YY + ZZ are additional tools, same function as part EE, but more easier to use.

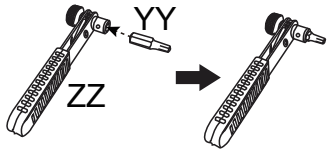

Use the screw (YY) and wrench (ZZ).

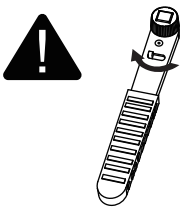

Tighten the screws.

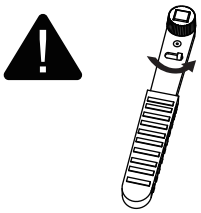

Loosen the screws.

Pre-Assembly

CHAIR PACKAGE CONTENTS

IMPORTANT: Do not fully tighten bolts/screws until all pieces are loosely assembled.

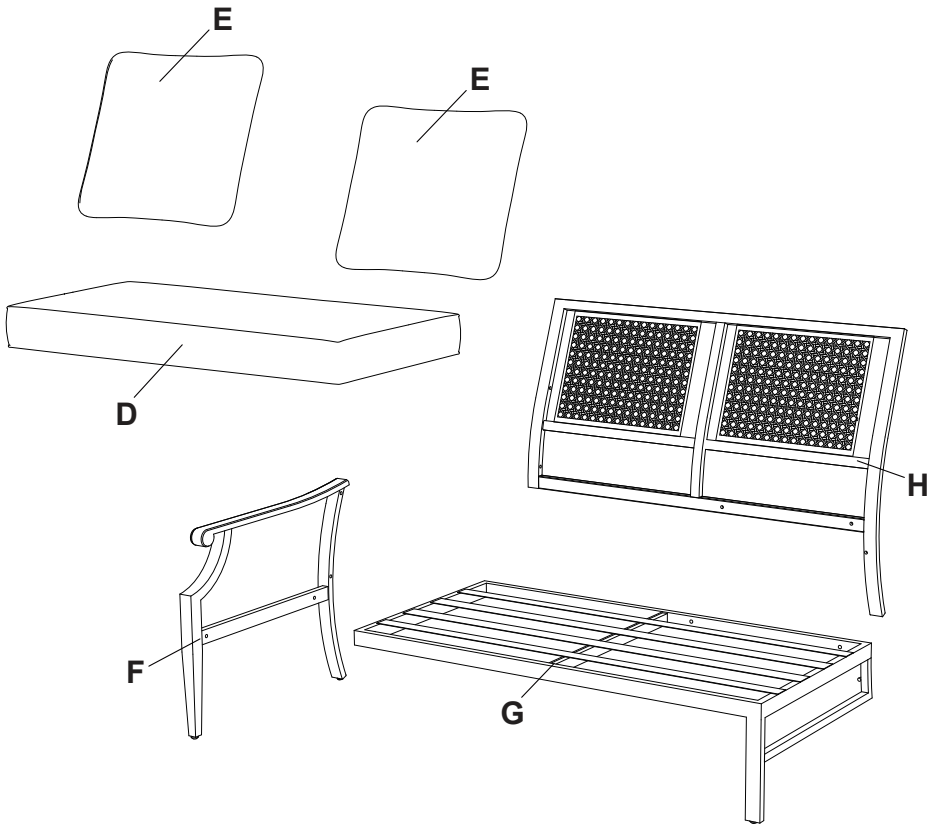

Part	Description	Quantity
F	Right arm	1
G	Chair seat	1
H	Chair back	1
D	Seat cushion	1
E	Back cushion	2

Assembly

1 Attach the right arm to the chair seat

□ Attach the right arm (F) to the chair seat (G) using M6 bolts (BB) and washers (CC).

NOTE: Please ensure all the bolts are assembled correctly and use the allen driver (EE) to tighten. Do not fully tighten bolts/screws until all pieces are loosely assembled. Add corresponding plastic caps (DD) after final assembly finished.

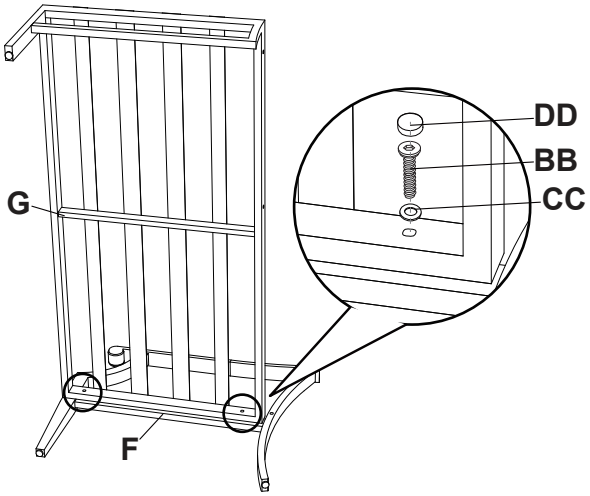

2 Attach the chair back to the chair seat

□ Attach the chair back (H) to the chair seat (G) using M6 bolts (BB) and washers (CC).

NOTE: Please ensure all the bolts are assembled correctly and use the allen driver (EE) to tighten. Do not fully tighten bolts/screws until all pieces are loosely assembled. Add corresponding plastic caps (DD) after final assembly finished.

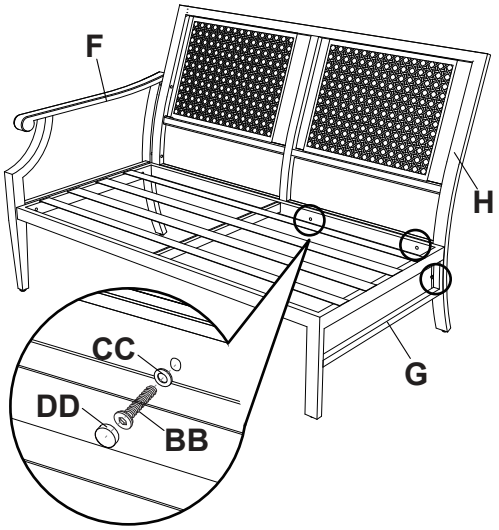

3 Attach the right arm to the chair back

□ Attach the right arm (F) to the chair back (H) using M6 bolts (AA) and washers (CC).

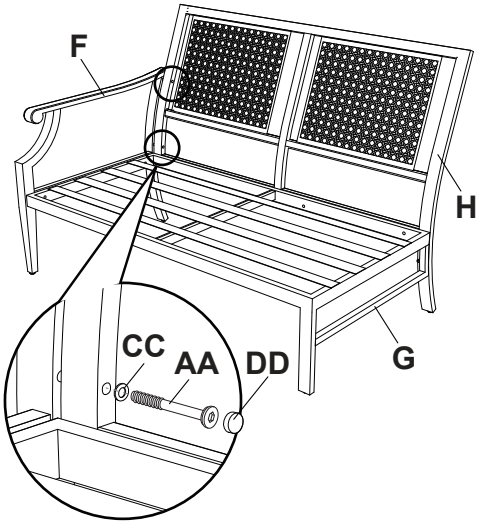

4 Add cushions

□ Add the seat cushion (D) and back cushion (E) on the chair.

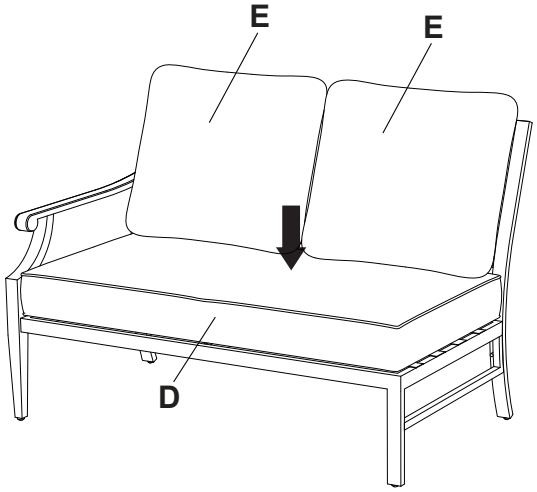

Care and Cleaning

- Do not allow water to build up in the frames. This will cause corrosion and possible freezing damage in cold climates.
- Use a mild soap and water for normal cleaning. Do not use janitorial or alcohol based cleaners. Some cleaners may be marked as natural, but some ingredients may cause discoloration or have an adverse reaction to your finish.
- Rinse with clean water and dry with a soft, absorbent cloth towel.
- Treat the frames with a liquid wax for maximum protection against UV rays and/or salty, damp air.
- Furniture covers are a great way to protect your investment from harsh elements of weather and UV light. However, it is important to ensure the furniture and covers are free of moisture and debris before covering. It is also necessary to promptly uncover furniture after precipitation and during periods of high humidity to prevent moisture build up. Failure to do so can lead to permanent surface and finish damage, which is not covered under warranty.

HAMPTON BAY®

Questions, problems, missing parts? Before returning to the store,
call Hampton Bay Customer Service
8 a.m. – 7 p.m., EST, Monday – Friday, 9 a.m. – 6 p.m., EST, Saturday

1-800-841-1350

HAMPTONBAY.COM

Retain this manual for future use.

Item #1005614290
1005540317
1005540310
Model #725.1172.000

HAMPTON BAY®

USE AND CARE GUIDE

BRAXTON PARK CORNER CHAIR

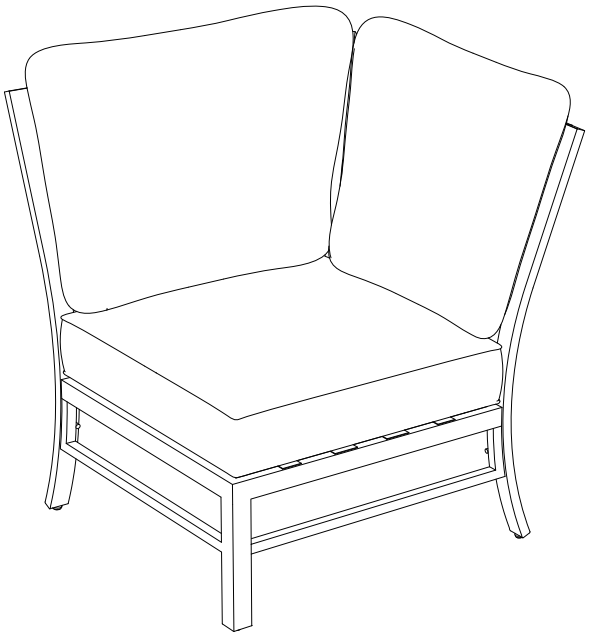

THANK YOU

We appreciated the trust and confidence you have placed in Hampton Bay through the purchase of this chair. We strive to continually create quality products designed to enhance your home. Visit us online to see our full line of products available for your home improvement needs. Thank you for choosing Hampton Bay!

Table of Contents

Table of Contents **2**
Safety Information 2
Warranty **2**
What is covered 2
What is not covered 2
Pre-Assembly **3**
Planning Assembly 3
Hardware Included 3
Chair Package Contents 4
Assembly **5**
Care and Cleaning **7**

Important Safety Instructions

SAVE THESE INSTRUCTIONS

CAUTION: Read all of the instructions in this manual before you begin assembly. Failure to do so may result in faulty assembly and potential injury!

READ ALL INSTRUCTIONS BEFORE USE

To reduce the risk of injury to persons:

1. Close supervision is necessary when this furnishing is used by or near children, or disabled persons, if applicable.
2. Use this furnishing only for its intended use as described in these instructions. Do not use attachments not recommended by the manufacturer.

Warranty

3 YEAR WARRANTY

WHAT IS COVERED

We warrant the product to be free of manufacturing defects to the original purchaser for three years.

WHAT IS NOT COVERED

It remains the customer's responsibility for freight and packaging charges to and from our service center. This warranty does not cover commercial use, hardware, acts of nature, freezing, or abusive use. In addition, purchased parts are not covered under this warranty.

We reserve the right to make substitutions with similar merchandise, if the model in question is no longer in production.

Contact Customer Care at 1-800-841-1350 or visit www.hamptonbay.com.

Pre-Assembly

PLANNING ASSEMBLY

Please read this entire instruction manual prior to assembly.

Identify all parts packed in the carton against the parts list. Remove all protective materials and place the parts on a non-abrasive surface to avoid scratching.

NOTE: More than one person may be required to assemble this product.

HARDWARE INCLUDED

NOTE: Hardware not shown to actual size.

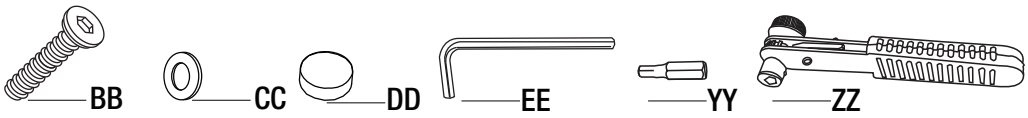

Part	Description	Quantity
BB	M6x35 bolt	8
CC	Washer	8
DD	Bolt cap	8
EE	Allen driver	1
YY	Hex. screw (6 mm)	1
ZZ	Ratchet wrench	1

NOTE: Part YY + ZZ are additional tools, same function as part EE, but more easier to use.

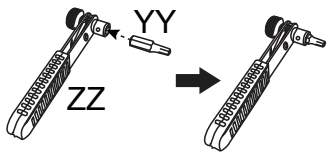

Use the screw (YY) and wrench (ZZ).



Tighten the screws.



Loosen the screws.

Pre-Assembly

CHAIR PACKAGE CONTENTS

IMPORTANT: Do not fully tighten bolts/screws until all pieces are loosely assembled.

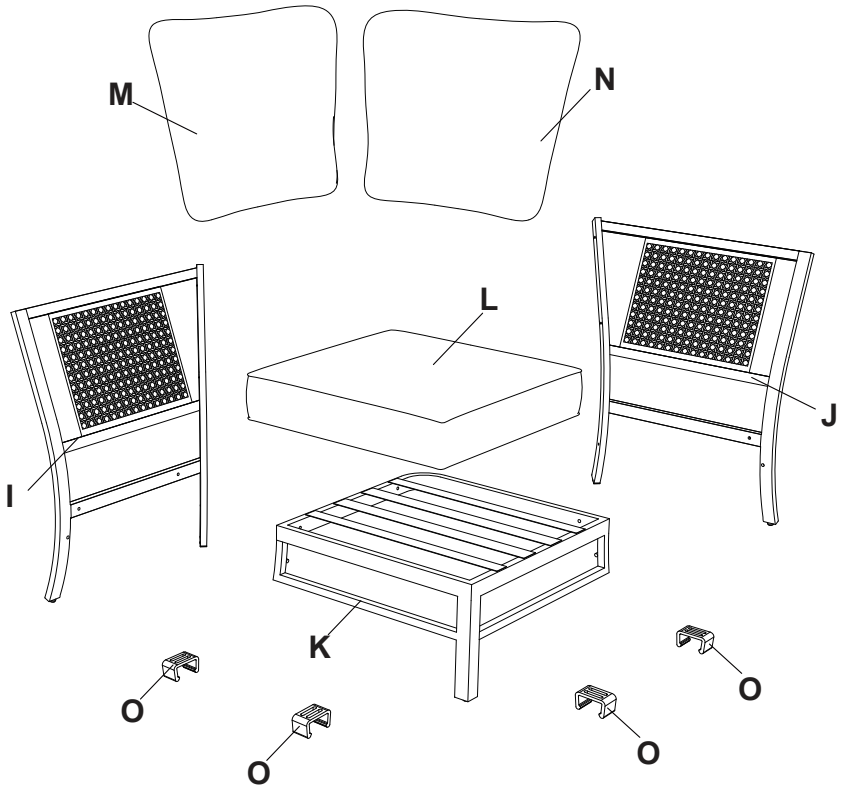

Part	Description	Quantity
I	Right back	1
J	Left back	1
K	Chair seat	1
L	Seat cushion	1
M	Small back cushion	1
N	Big back cushion	1
O	Clip	4

Assembly

1 Attach the right back to the chair seat

□ Attach the right back (I) to the chair seat (K) using M6 bolts (BB) and washers (CC).

NOTE: Please ensure all the bolts are assembled correctly and use the allen driver (EE) to tighten. Do not fully tighten bolts/screws until all pieces are loosely assembled. Add corresponding plastic caps (DD) after final assembly finished.

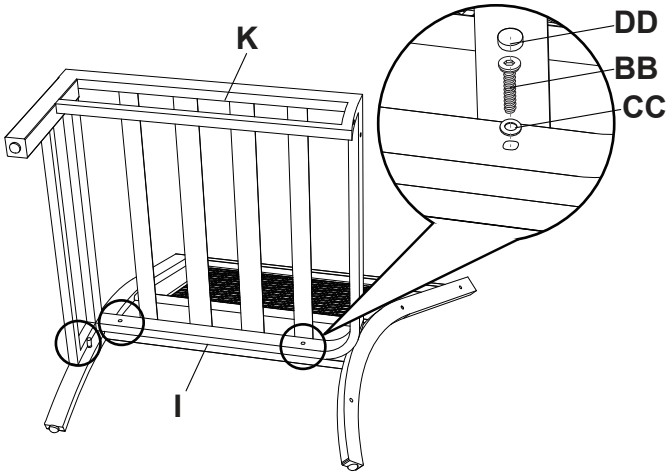

2 Attach the left back to the chair seat

□ Attach the left back (J) to the chair seat (K) using M6 bolts (BB) and washers (CC).

NOTE: Please ensure all the bolts are assembled correctly and use the allen driver (EE) to tighten. Do not fully tighten bolts/screws until all pieces are loosely assembled. Add corresponding plastic caps (DD) after final assembly finished.

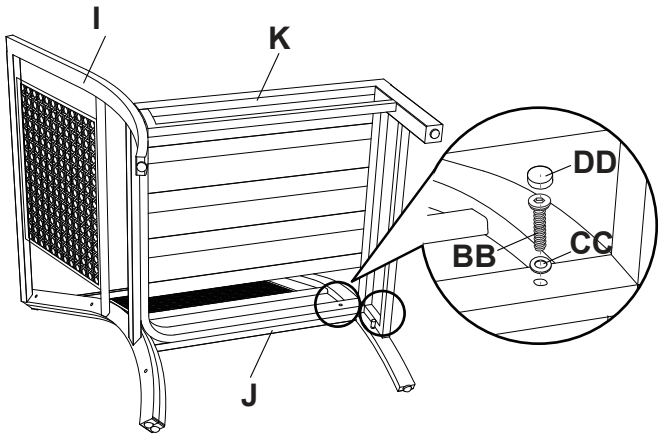

3 Attach the left back to the right back

□ Attach the left back (J) to the right back (I) using M6 bolts (BB) and washers (CC).

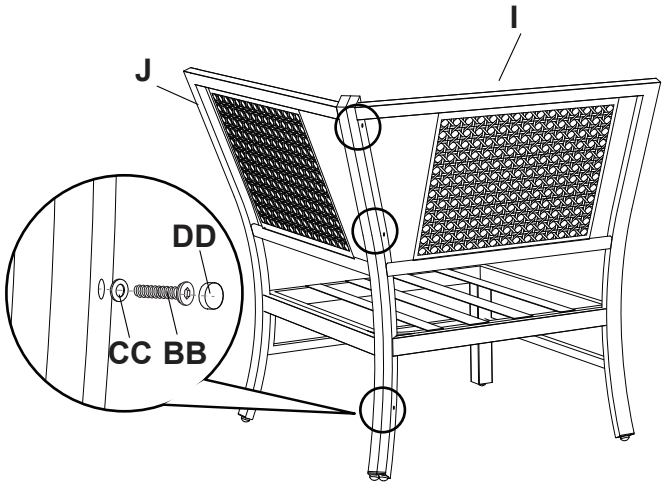

4 Add cushions

□ Add the seat cushion (L), small back cushion (M) and big back cushion (N) on the chair.

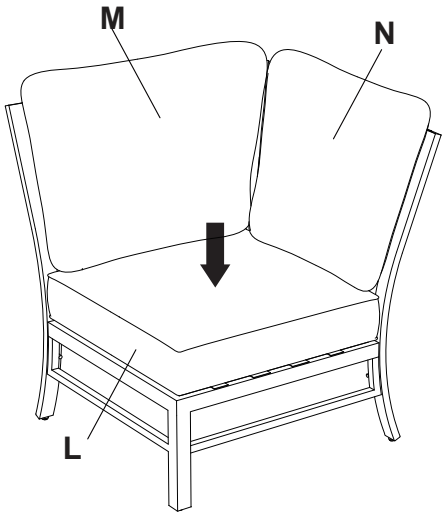

5 Attach the clips

- ☐ Attach the clips (O) to connect the left arm loveseat, right arm loveseat and conor chair.

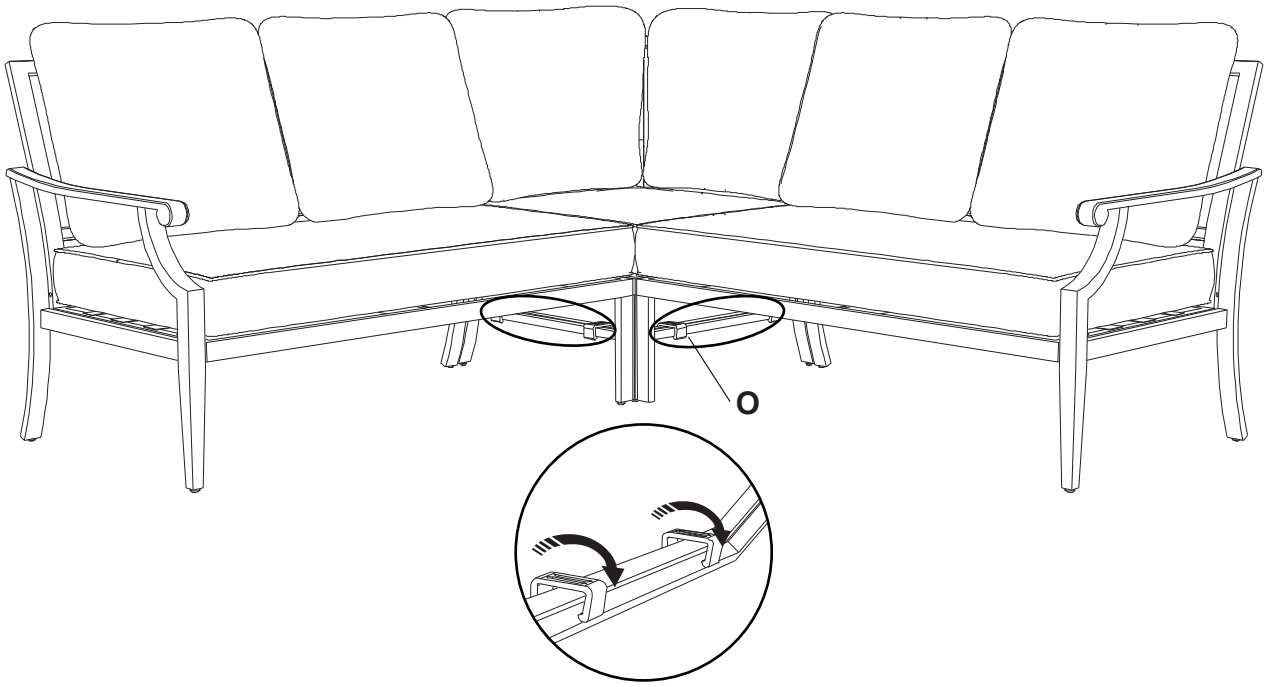

Care and Cleaning

- Do not allow water to build up in the frames. This will cause corrosion and possible freezing damage in cold climates.
- Use a mild soap and water for normal cleaning. Do not use janitorial or alcohol based cleaners. Some cleaners may be marked as natural, but some ingredients may cause discoloration or have an adverse reaction to your finish.
- Rinse with clean water and dry with a soft, absorbent cloth towel.
- Treat the frames with a liquid wax for maximum protection against UV rays and/or salty, damp air.
- Furniture covers are a great way to protect your investment from harsh elements of weather and UV light. However, it is important to ensure the furniture and covers are free of moisture and debris before covering. It is also necessary to promptly uncover furniture after precipitation and during periods of high humidity to prevent moisture build up. Failure to do so can lead to permanent surface and finish damage, which is not covered under warranty.

HAMPTON BAY®

Questions, problems, missing parts? Before returning to the store,
call Hampton Bay Customer Service
8 a.m. – 7 p.m., EST, Monday – Friday, 9 a.m. – 6 p.m., EST, Saturday

1-800-841-1350

HAMPTONBAY.COM

Retain this manual for future use.