Installation Instructions

Washer

If you have any questions, call GE Appliances at 800.GE.CARES (800.432.2737) or visit our Website at: GEAppliances.com
In Canada, call 800.561.3344 or visit GEAppliances.ca

BEFORE YOU BEGIN

Read these instructions completely and carefully.

- **IMPORTANT –** Save these instructions for local inspector's use.
- **IMPORTANT –** Observe all governing codes and ordinances.
- **Note to Installer –** Be sure to leave these instructions with the Consumer.
- **Note to Consumer –** Keep these instructions for future reference.
- **Skill level –** Installation of this appliance requires basic mechanical and electrical skills.
- **Completion time –** 1-3 hours
- Proper installation is the responsibility of the installer.
- Product failure due to improper installation is not covered under the Warranty.

TOOLS REQUIRED

- ☐ Level
- ☐ Adjustable wrench
- ☐ Channel-lock adjustable pliers
- ☐ Phillips screwdriver

PARTS SUPPLIED

- ☐ Shipping Bolt Covers
- ☐ Drain Hose Guide
- ☐ Lock Bar (Retain for **Reversing the Door Swing** option)
- ☐ Cable Tie

LOCATION OF YOUR WASHER

DO NOT Install the Washer:

1. In an area exposed to dripping water or outside weather conditions. The ambient temperature should never be below 60°F (15.6°C) for proper washer operation.
2. In an area where it will come in contact with curtains or drapes.
3. On carpet. The floor **MUST** be a hard surface with a maximum slope of 1/2″ per foot (1.27 cm per 30 cm). To make sure the washer does not vibrate or move, you may have to reinforce the floor.

NOTE: If floor is in poor condition, use 3/4″ impregnated plywood sheet solidly attached to existing floor covering.

MOBILE HOME INSTALLATION:

Installation must conform to Standard for Mobile Homes, ANSI A119.1 and National Mobile Home Construction and Safety Standards Act of 1974 (PL93-383).

PARTS REQUIRED (Sold separately or included with the GFW510 model)

- ☐ Water Hoses (2)
- ☐ Rubber Washers (2) and Strainer Screens (2)

GE Appliances Parts and Accessories

Order on-line at **GEApplianceparts.com** today, 24 hours a day or by phone at 877.959.8688 during normal business hours. In Canada, visit your local GE Appliances parts distributor or call 800.661.1616 or **GEAppliances.ca/en/products/parts-filters-accessories**.

Part Number	Accessory
WX14X10011	6 ft stainless steel washer hoses with 90° elbows; 2-pack
WH1X2267	Rubber Washer (1) and Screen (1)

49-3000217 Rev 2

WASHER DIMENSIONS

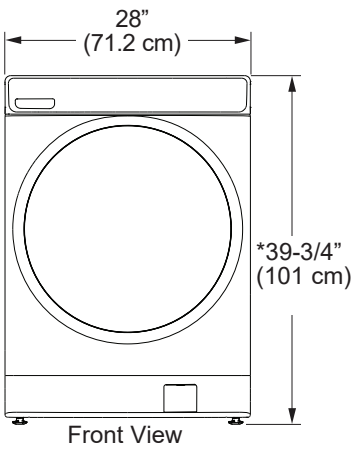

Model - GFW850:

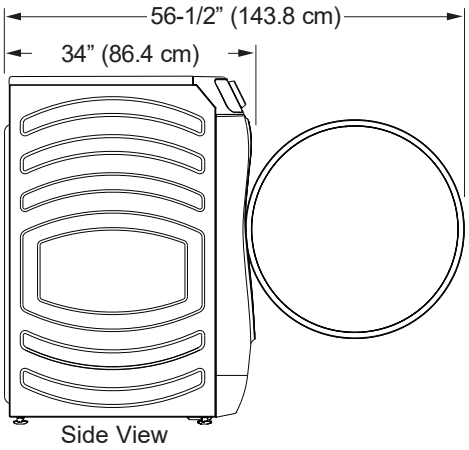

Models - GFW650, GFW550, GFW510:

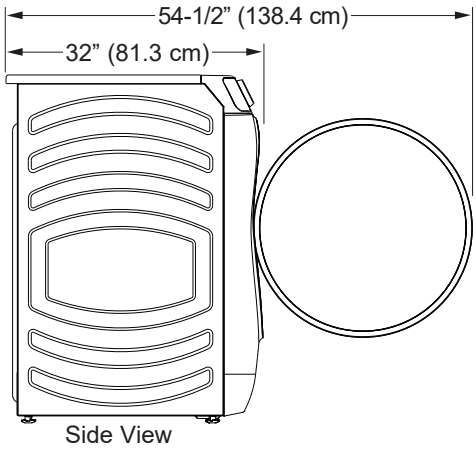

NOTE:
With leveling legs retracted: 39-3/4 (101 cm).
With leveling legs fully extended: 40-5/8 (103.1 cm).

MINIMUM CLEARANCES

Alcove or Closet

- Rear = 0”*
- Sides = 0”
- Top = 0″
- Front = 0″

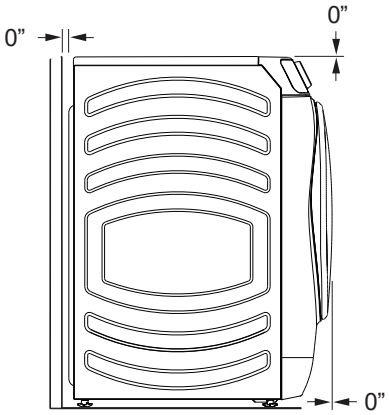

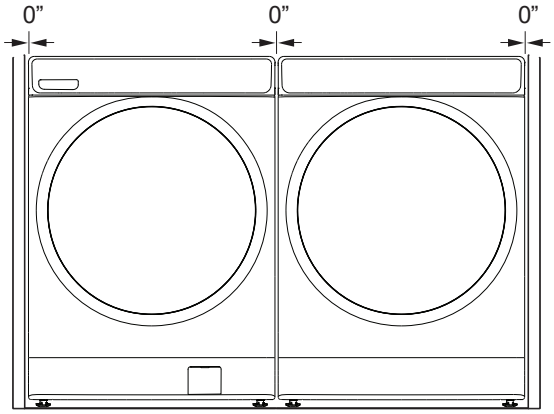

- Consideration must be given to provide adequate clearance for installation and service.
- Closet doors must be louvered or otherwise ventilated and have at least 60 square inches (387.1 cm^2) of open area. If the closet contains both a washer and a dryer, doors must contain a minimum of 120 square inches (774.2 cm^2) of open area.

*To enable 0” clearance on the back of the washer, you must use 90° elbow hoses. Otherwise you may require some additional clearance to avoid rubbing of the hoses against the back wall.

ACCESSORIES:

Order on-line at **GEApplianceparts.com**, 24 hours a day or by phone at **877.959.8688** during normal business hours.

Part Number	Accessory
GFP1528SNWW	White Pedestal
GFP1528PNSN	Satin Nickel Pedestal
GFP1528PNRS	Royal Sapphire Pedestal
GFP1528PNDG	Diamond Gray Pedestal
GFA28KITN	Stacking Kit for Dryer over Washer

Follow the Installation Instructions included in the Kit for all clearances and installation requirements.

Pedestal:

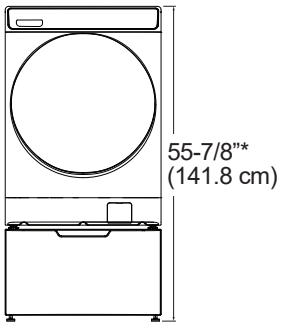

Stacked:

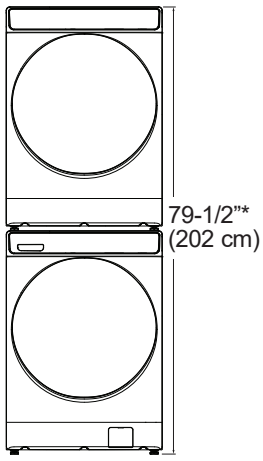

UNPACKING THE WASHER

⚠WARNING Recycle or destroy the carton and plastic bags after the washer is unpacked. Make materials inaccessible to children. Children might use them for play. Cartons covered with rugs, bedspreads or plastic sheets can become airtight chambers causing suffocation.

1. Cut and remove all packaging straps.
2. While it is in the carton, carefully lay the washer on its side. DO NOT lay the washer on its front or back.
3. Turn down the bottom flaps. Remove all base packaging including the styrofoam base.
4. Carefully return the washer to an upright position and remove the carton by lifting it upward.
5. Carefully move the washer to within 4 feet (122 cm) of the final location.
6. Remove the following from the back side of the washer:
   4 bolts
   4 plastic spacers (including power cord retainers and rubber grommets)
   2 brackets

NOTE: Do NOT remove the screw or clip holding the hose.

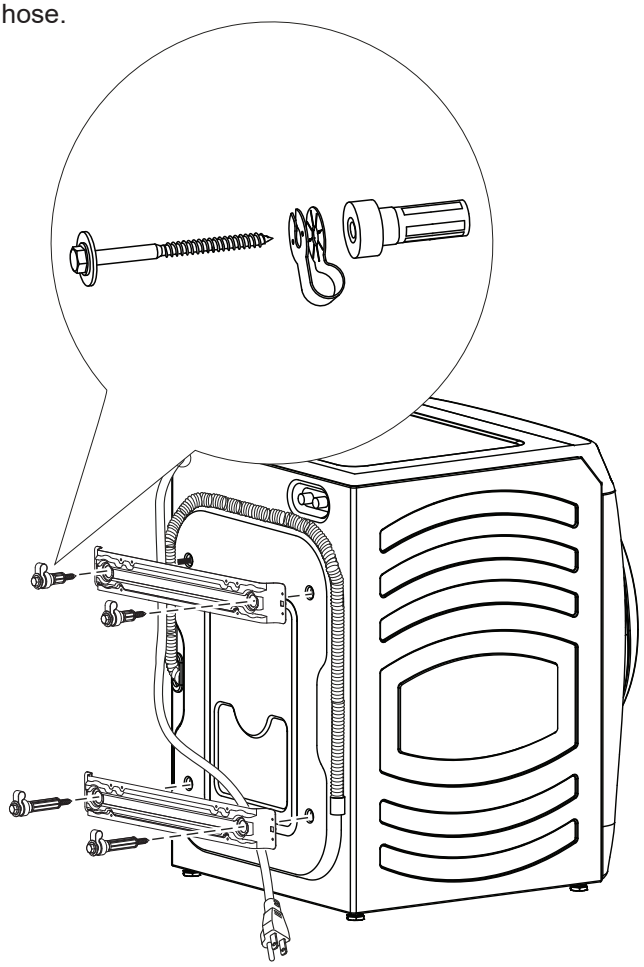

UNPACKING THE WASHER (cont.)

7. Insert shipping bolt hole covers into shipping bolt holes.

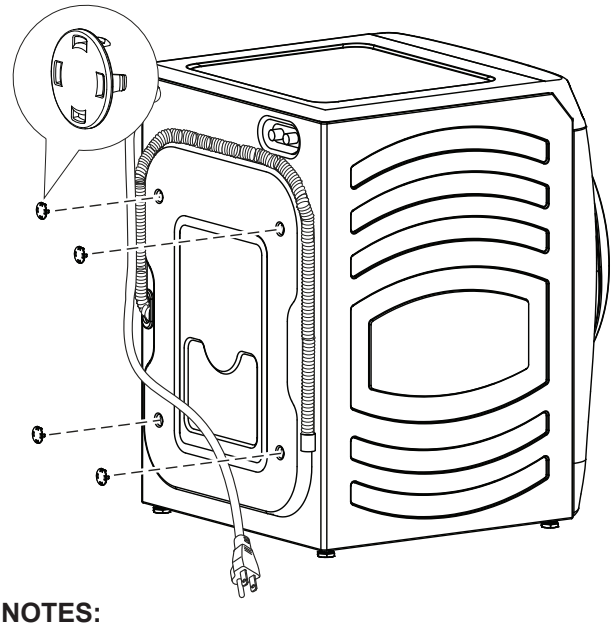

NOTES:

- **Failure to remove the shipping braces can cause the washer to become severely unbalanced.**
- **IMPORTANT: Save all bolts for future use.**
  If you must transport the washer at a later date, you must reinstall the shipping support hardware to prevent shipping damage. Keep the hardware in the plastic bag provided.

ELECTRICAL REQUIREMENTS

⚠WARNING - Electrical Shock Hazard

Plug into a grounded 3-prong outlet.

DO NOT remove ground prong.

DO NOT use an adapter.

DO NOT use an extension cord.

Failure to follow these instructions can result in death, fire or electrical shock.

CIRCUIT – Individual, properly polarized and grounded 15 or 20 amp circuit breaker or time-delay fuse.

POWER SUPPLY – 2 wire plus ground, 120 Volt, single phase, 60 Hz, alternating current.

Outlet Receptacle – Properly grounded 3-prong receptacle to be located so the power cord is accessible when the washer is in an installed position. If a 2-prong receptacle is present, it is the owner's responsibility to have a licensed electrician replace it with a properly grounded 3-prong grounding type receptacle.

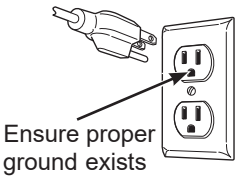

Washer must be electrically grounded in accordance with local codes and ordinances, or in the absence of local codes, with latest edition of the NATIONAL ELECTRICAL CODE, ANSI/NFPA NO. 70 or CANADIAN ELECTRICAL CODE, CSA C22.1. Check with a licensed electrician if you are not sure that the washer is properly grounded.

GROUNDING INSTRUCTIONS

This appliance must be grounded. In the event of malfunction or breakdown, grounding will reduce the risk of electric shock by providing a path of least resistance for electric current. This appliance is equipped with a cord having an equipment- grounding conductor and a grounding plug. The plug must be plugged into an appropriate outlet that is properly installed and grounded in accordance with all local codes and ordinances.

⚠WARNING Improper connection of the equipment-grounding conductor can result in a risk of electrical shock. Check with a qualified electrician, or service representative or personnel, if you are in doubt as to whether the appliance is properly grounded. **DO NOT** modify the plug on the power supply cord. If it will not fit the outlet, have a proper outlet installed by a qualified electrician.

If required by local codes, an external 18 gauge or larger copper ground wire (not provided) may be added. Attach to washer cabinet with a #10-16 x 1/2" sheet metal screw (available at any hardware store) to rear of washer.

⚠WARNING - Electrical Shock Hazard

Disconnect power supply before servicing.

Replace all parts and panels before operating.

Failure to do so can result in death or electrical shock.

⚠WARNING - Shock Hazard

Certain internal parts are intentionally not grounded and may present a risk of electric shock only during servicing.

Service personnel – DO NOT contact the following parts while the appliance is energized: water valve, drain pump, NTC, heater, door lock, inverter board, motor and MC board.

WATER SUPPLY REQUIREMENTS

Hot and cold water faucets MUST be installed within 42 inches (107 cm) of your washer's water inlet. The faucets MUST be 3/4" (1.9 cm) garden hose-type so inlet hoses can be connected. Water pressure MUST be between 10 and 120 pounds per square inch. Your water department can advise you of your water pressure. The hot water temperature should be set to deliver water at 120° to 140°F (48°–60°C) to provide proper Automatic Temperature Control (ATC) performance.

NOTE: A water softener is recommended to reduce buildup of scale inside the steam generator if the home water supply is very hard.

DRAIN REQUIREMENTS

1. Drain capable of eliminating 10 gallons (38 L) per minute.
2. A standpipe diameter of 1-1/4" (3.18 cm) minimum.
3. The standpipe height above the floor should be:
   Minimum height: 24" (61 cm)
   Maximum height: 96" (244 cm)

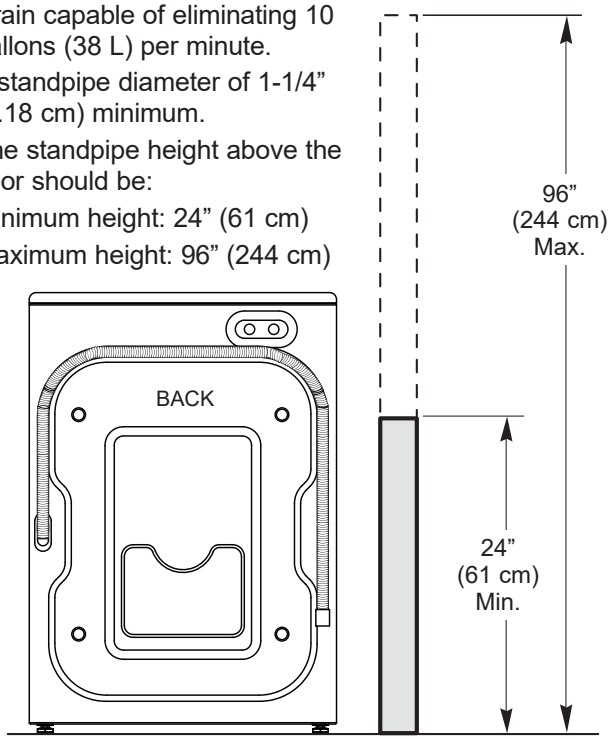

INSTALLING THE WASHER

1. Run some water from the hot and cold faucets to flush the water lines and remove particles that might clog the inlet hose and water valve screens.
2. Remove the inlet hoses from the packaging (whether supplied with the washer or sold separately).
3. (90° elbow end) Ensure there is a rubber washer in the 90° elbow end of the HOT and COLD hoses. Reinstall the rubber washer into the hose fitting if it has fallen out during shipment. Carefully connect the inlet hose marked HOT to the outside “H” outlet of the water valve. Tighten by hand, then tighten another 2/3 turn with pliers. Carefully connect the other inlet hose to the inside “C” outlet of the water valve. Tighten by hand; then tighten another 2/3 turn with pliers. **Do not crossthread or over-tighten these connections.**

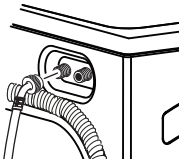

4. If inlet hose screen washers are not already inserted into the inlet hoses, install them by inserting into the free ends of the HOT and COLD inlet hoses with protruded side facing the faucet.

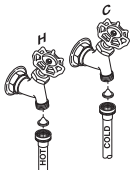

5. Connect the inlet hose ends to the HOT and COLD water faucets tightly by hand, then tighten another 2/3 turn with pliers. Turn the water on and check for leaks.
6. Carefully move the washer to its final location. Gently rock the washer into position. It is important not to damage the rubber leveling legs when moving your washer to its final location. Damaged legs can increase washer vibration. It may be helpful to spray window cleaner on the floor to help move your washer into its final position.

   NOTE: To reduce vibration, ensure that all four rubber leveling legs are firmly touching the floor. Push and pull on the back right and then back left of your washer.

   NOTE: Do not use the dispenser drawer or door to lift the washer.

   NOTE: If you are installing into a drain pan, you can use a 24-inch long 2x4 to lever the washer into place.
7. With the washer in its final position, place a level on top of the washer (if the washer is installed under a counter, the washer should not be able to rock). Adjust the front leveling legs up or down to ensure the washer is resting solidly. Turn the lock nuts on each leg up toward the base of the washer and snug with a wrench.

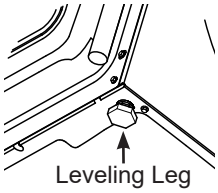

   NOTE: Keep the leg extension at a minimum to prevent excessive vibration. The farther out the legs are extended, the more the washer will vibrate.

   If the floor is not level or is damaged, you may have to extend the rear leveling legs.

Video

Scan this code to watch a video on Step 7.

INSTALLING THE WASHER (cont.)

8. Attach U-shaped hose guide to the end of the drain hose. Place the hose in a laundry tub or standpipe and secure it with the cable tie provided in the enclosure package.

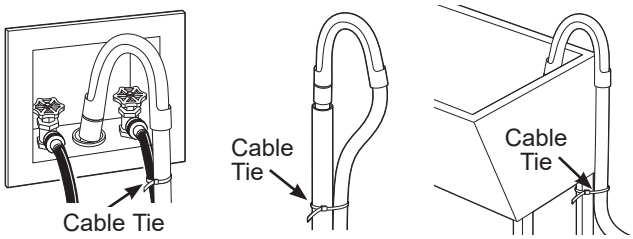

   NOTE: Placing the drain hose too far down the drain pipe can cause a siphoning action. No more than 7 inches of hose should be in the drain pipe. There must be an air gap around the drain hose. A snug fit can cause a siphoning action.
9. Plug the power cord into a grounded outlet.

   NOTE: Check to be sure the power is off at the circuit breaker/fuse box before plugging the power cord into an outlet.
10. Turn on the power at the circuit breaker/fuse box.
11. Read the rest of this Owner’s Manual. It contains valuable and helpful information that will save you time and money.
12. **Before starting the washer, check to make sure:**
    - ☐ Main power is turned on.
    - ☐ The washer is plugged in.
    - ☐ The water faucets are turned on.
    - ☐ The unit is level and all four leveling legs are firmly on the floor.
    - ☐ The shipping support hardware is removed and saved.
    - ☐ The drain hose is properly tied up.
    - ☐ There are no leaks at the faucet, drain line or washer.
13. Run the washer through a complete cycle. Check for water leaks and proper operation.
14. If your washer does not operate, please review the Before You Call For Service section before calling for service.
15. Place these instructions in a location near the washer for future reference.

REPLACEMENT PARTS

If replacement parts are needed for your washer, they can be ordered in the United States by visiting our Website at **GEApplianceparts.com** or by calling GE Appliances at 877.959.8688. In Canada, visit **GEAppliances.ca/en/products/parts-filters-accessories** or call 800.661.1616.

REVERSING THE DOOR SWING (Optional)

⚠WARNING

Unplug the appliance or turn off the circuit breaker before servicing. Pressing the **Power** pad **DOES NOT** disconnect power.

⚠WARNING - Shock Hazard

Certain internal parts are intentionally not grounded and may present a risk of electric shock only during servicing.

Service personnel – DO NOT contact the following parts while the appliance is energized: water valve, drain pump, NTC, heater, door lock, inverter board, motor and MC board.

IMPORTANT NOTES

- Handle parts carefully to avoid scratching paint.
- Provide a non-scratching work surface for the door.
- Set screws down by their related parts to avoid using them in the wrong places.
- Once you begin, do not move the cabinet until door-swing reversal is completed.
- These instructions are for changing the hinges from the left side to the right side—if you ever want to switch them back to the right side, follow these same instructions and reverse all references to the left and right.

TOOL YOU WILL NEED

❒ Phillips-head screwdriver

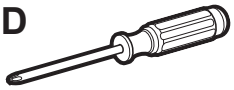

PART SUPPLIED

❒ Lock Bar

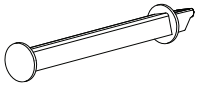

1 REMOVE THE DOOR ASSEMBLY

- Open the washer door.
- While supporting the door, remove the 6 screws from the hinge in the washer face.
- Lift the door assembly to remove it from the washer face and set it on a protective surface.

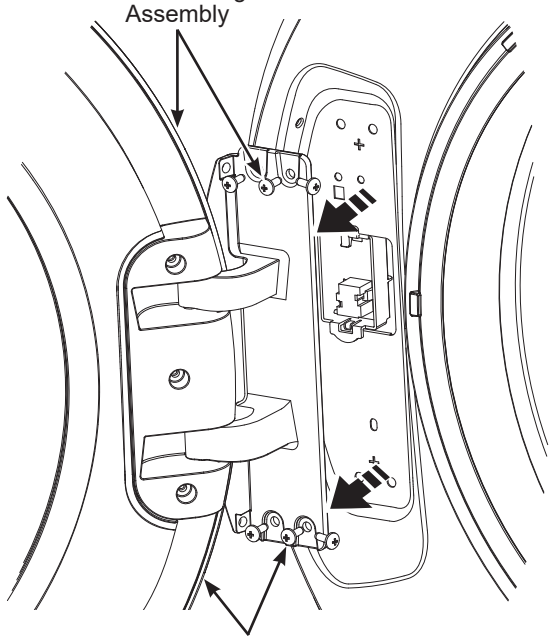

2 REMOVE THE DOOR HINGE COVER AND THE DOOR HINGE

- Remove the 3 screws from the hinge cover and remove the cover.
- Remove the 6 screws from the hinge and remove the hinge from the door.

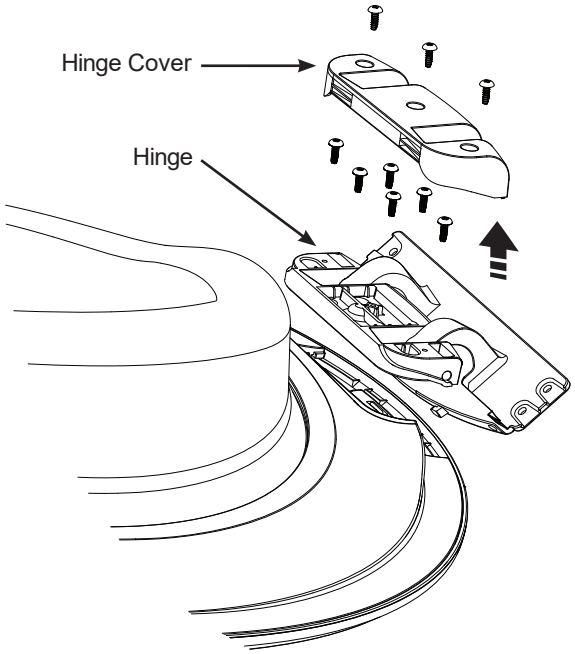

REVERSING THE DOOR SWING (Optional)

3 REMOVE, REVERSE AND REPLACE THE DOOR STRIKER

- Remove the 2 screws from the striker. Rotate the striker 180° and reinstall the striker with its screws.

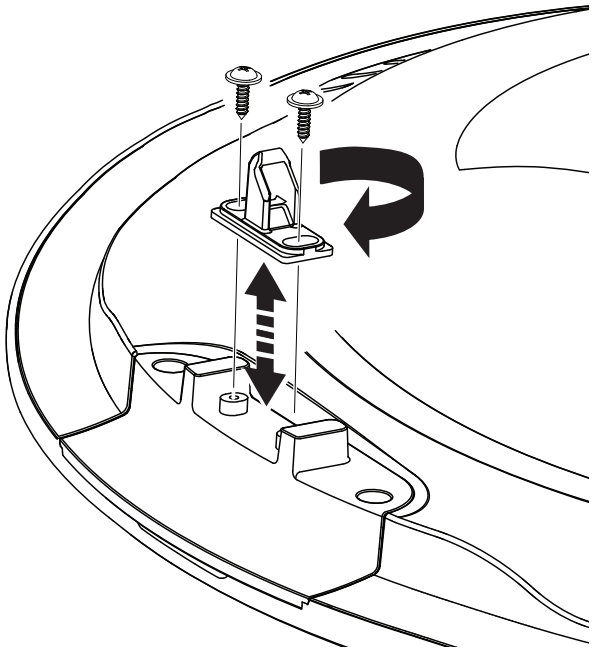

4 REMOVE THE DOOR STRIKER ASSEMBLY AND REPLACE ON THE OPPOSITE SIDE

- Remove the 2 screws from the striker assembly and remove the assembly by pulling it toward the center, pushing it up and pulling it out.

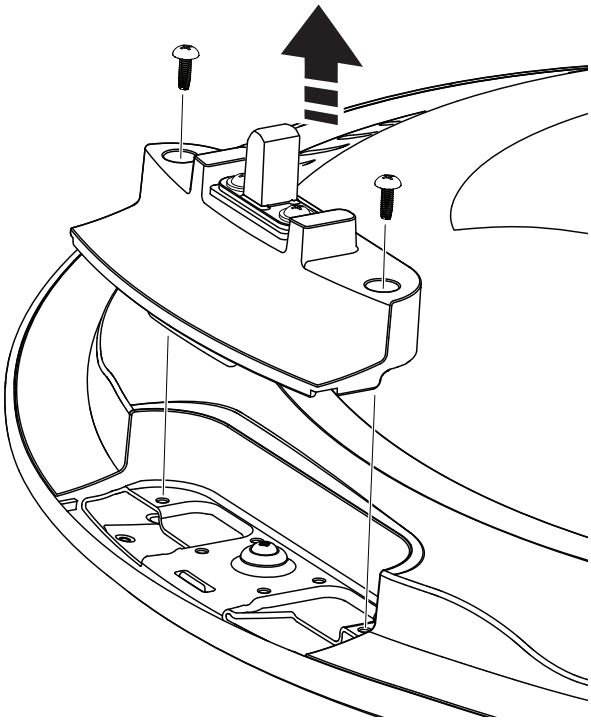

- Rotate the striker assembly and replace it on the opposite side with its screws.

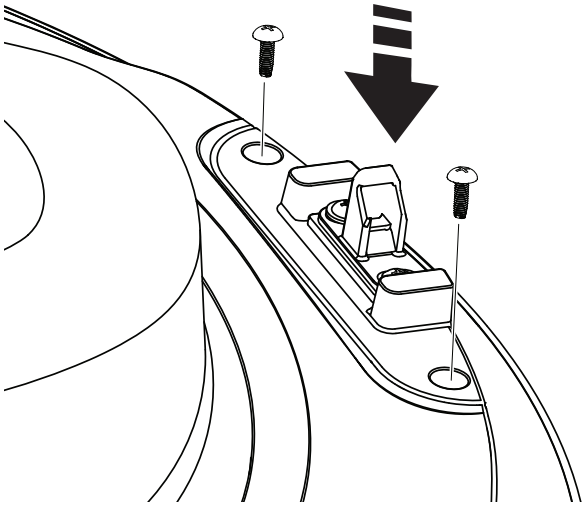

REVERSING THE DOOR SWING (Optional)

5 REPLACE THE DOOR HINGE AND THE DOOR HINGE COVER ON THE OPPOSITE SIDE

- Rotate the door hinge and replace it on the opposite side with its screws.
- Rotate the door hinge cover and replace it on the opposite side with its screws.

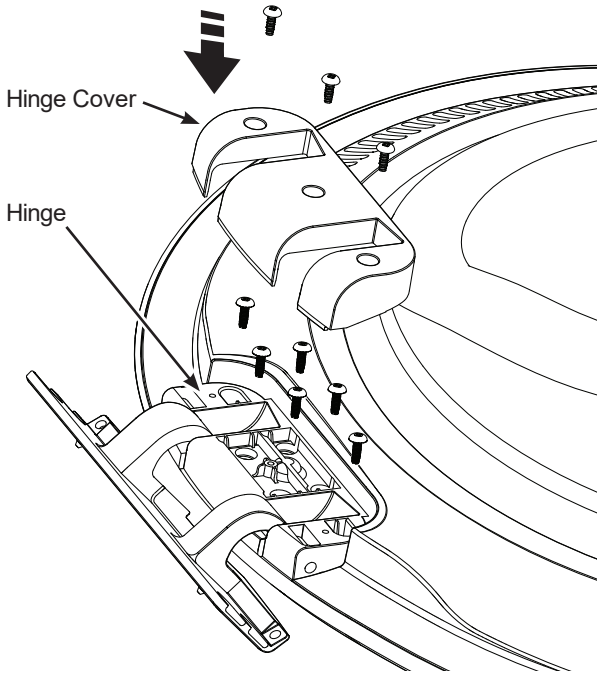

6 REMOVE THE TERMINAL HOLDER AND DISCONNECT THE PIN CONNECTOR FROM WASHER

- Using your fingers, pry the terminal holder from the washer face.
- Disconnect the pin connector.

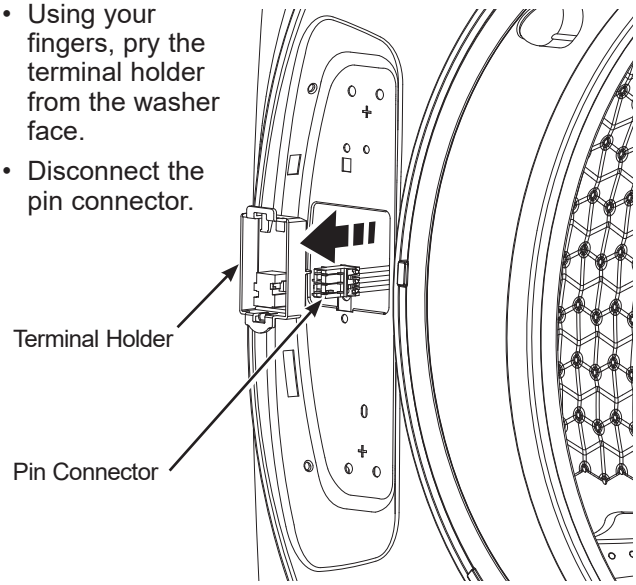

7 REMOVE LOCK ASSEMBLY AND INSTALL ON OPPOSITE SIDE OF WASHER

- Remove the 2 screws from the lock cover and remove it from the washer face.

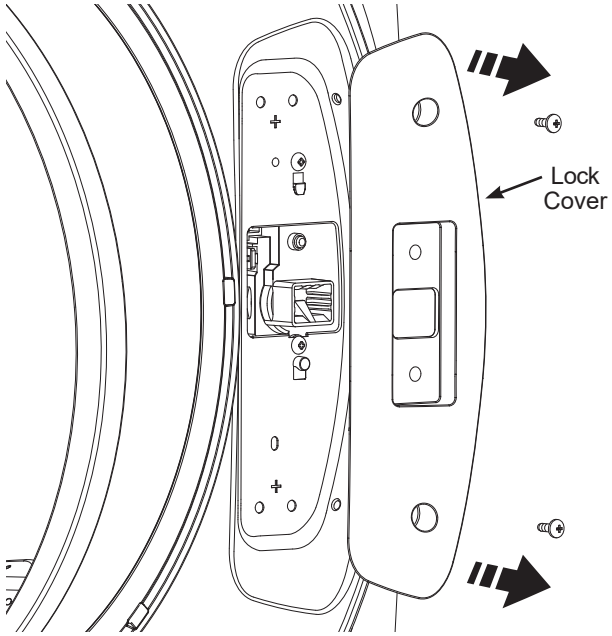

- Insert the provided lock bar into the lock mechanism in the washer face. Remove the lock assembly by removing its two screws, using the lock bar to lift it up to unhook, tilting and pulling it out of the washer face. Disconnect its pin connector by unsnapping its locks.

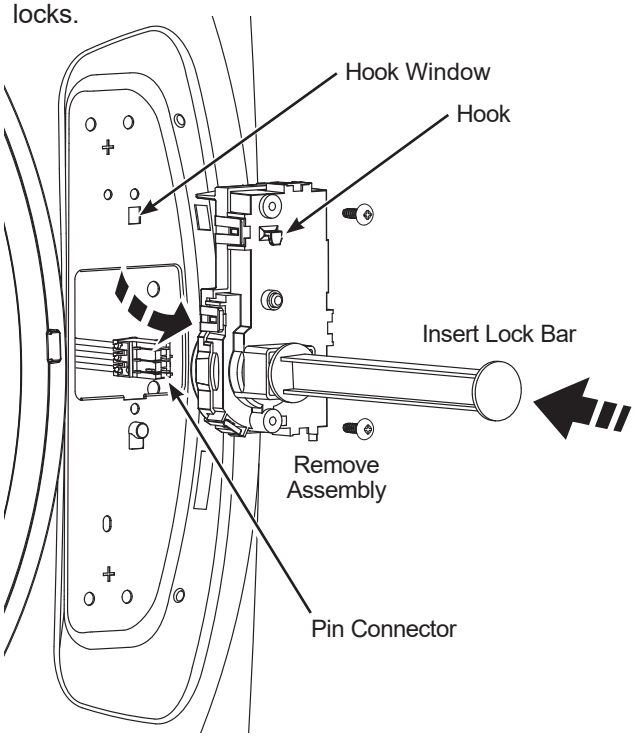

REVERSING THE DOOR SWING (Optional)

7 REMOVE LOCK ASSEMBLY AND INSTALL ON OPPOSITE SIDE OF WASHER (CONTINUED)

- Do **NOT** rotate lock assembly. Move it to the opposite side of the washer and connect the pin connector making sure it is fully snap locked together. Tilt and insert the lock assembly into the washer face, lift it up and latch its hook into its window. Replace its screws. Remove the lock bar from the assembly and retain for future use.

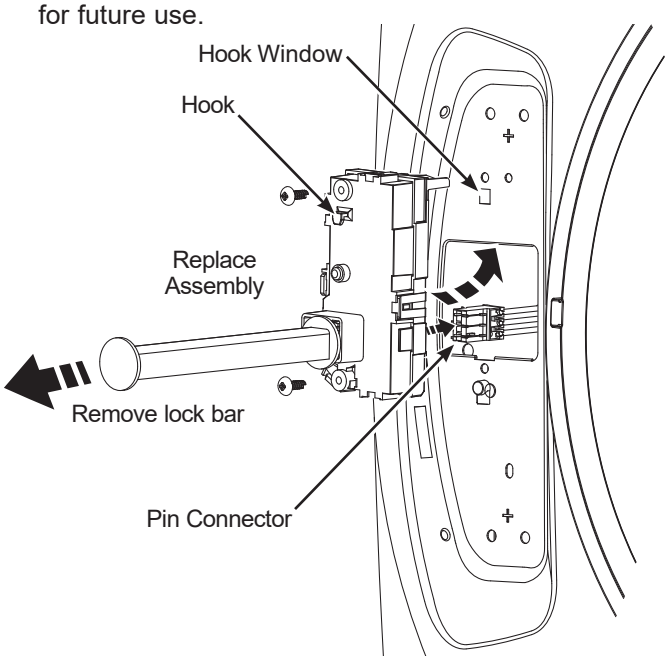

- Install the lock cover over the lock assembly, making sure the locating post fits into the locating hole and that the lock switch operates freely. Replace its screws.

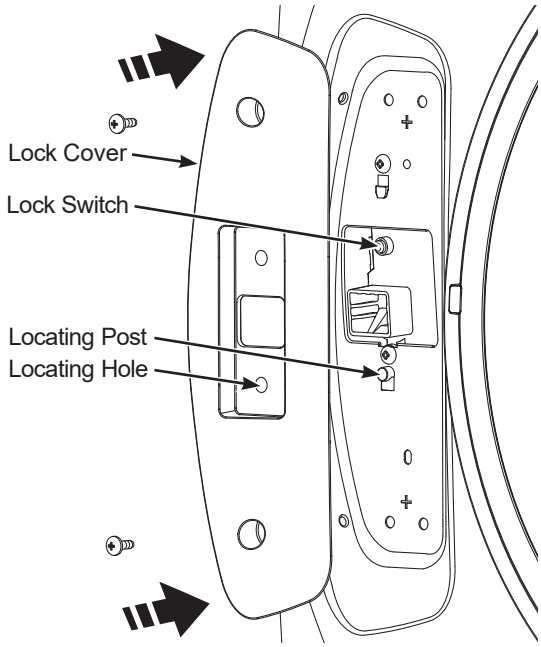

8 RECONNECT PIN CONNECTOR FROM THE WASHER AND REPLACE THE TERMINAL HOLDER

- Reconnect the pin connector and press the terminal holder back into the washer face on the opposite side.

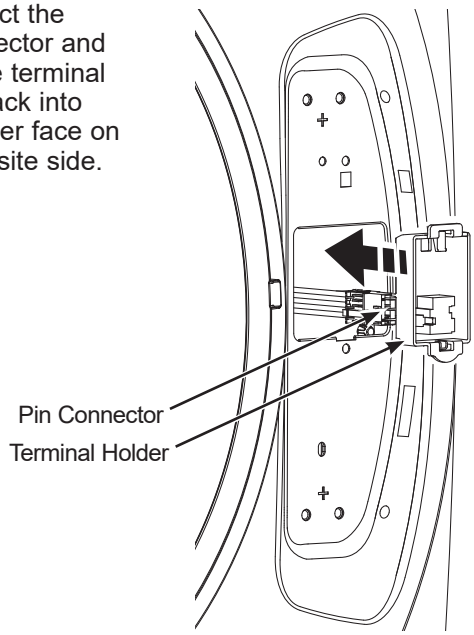

9 REPLACE THE DOOR ASSEMBLY

- Lift the door assembly into place and secure it onto the washer face with its 6 screws.

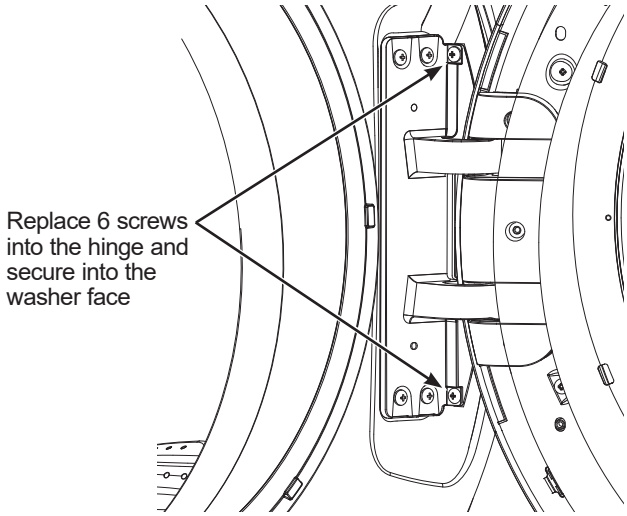

- Close the washer door.

  NOTE: Make sure the door opens and closes correctly. If not, repeat all steps making sure all parts and screws are securely seated.
- Connect power cord and turn on the breaker.
- Run the washer through a complete cycle to verify proper operation.