OPERATOR'S MANUAL

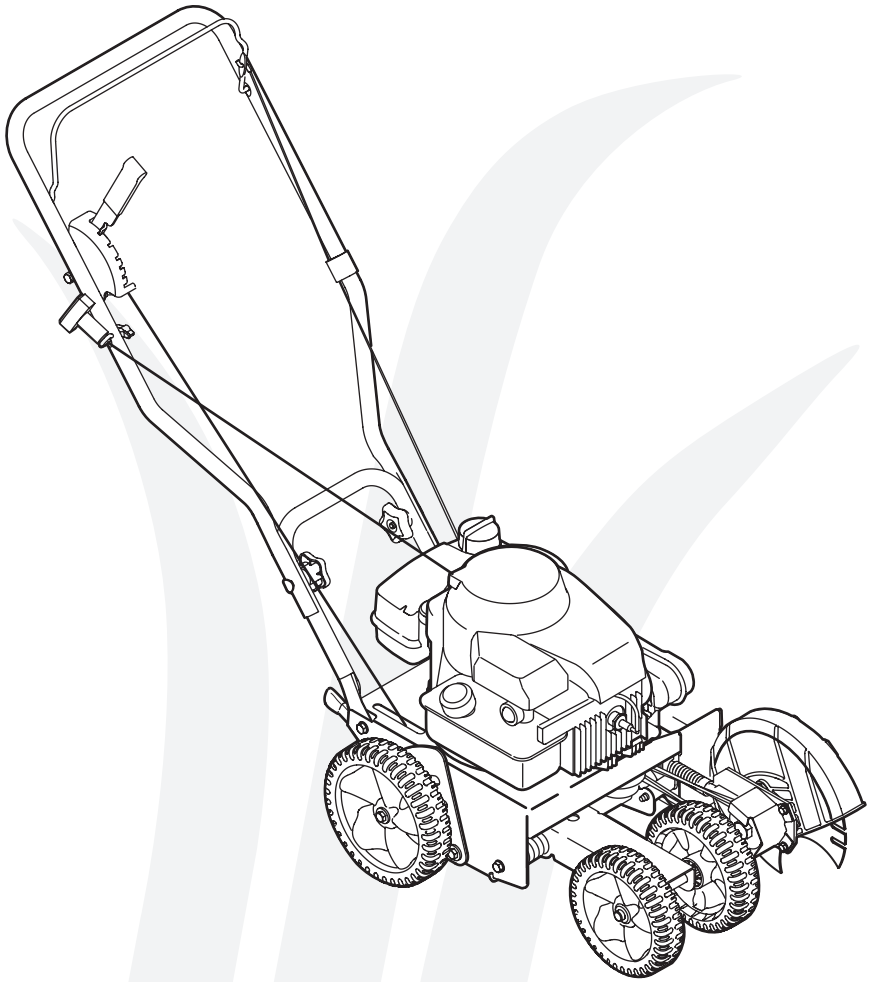

Lawn Edger — Model Series 550

IMPORTANT

READ SAFETY RULES AND INSTRUCTIONS CAREFULLY BEFORE OPERATION

Warning: This unit is equipped with an internal combustion engine and should not be used on or near any uniiproved forest-covered, brush-covered or grass-covered land unless the engine's exhaust system is equipped with a spark arrester meeting applicable local or state laws (if any). If a spark arrester is used, it should be maintained in effective working order by the operator. In the State of California the above is required by law (Section 4442 of the California Public Resources Code). Other states may have similar laws. Federal laws apply on federal lands. A spark arrester for the muffler is available through your nearest engine authorized service dealer or contact the service department, P.O. Box 361131 Cleveland, Ohio 44136-0019.

PRINTED IN U.S.A

MTD LLC, P.O. BOX 361131 CLEVELAND, OHIO 44136-0019

FORM NO. 769-02351A

This Operator's Manual is an important part of your new Edger. It will help you assemble, prepare and maintain the unit for best performance. Please read and understand what it says.

Table of Contents

1. Safety Labels 3
2. Safe Operation Practices 4–5
3. Assembling Your New Edger 6
4. Know Your Edger 7
5. Operation and Adjustment 8–9
6. Maintaining & Servicing Your Edger 10–11
7. Off-Season Storage 12
8. Troubleshooting..... 13
9. Parts List 14–15
10. Warranty.....Back Cover

Finding and Recording Model Number

BEFORE YOU START ASSEMBLING YOUR NEW EQUIPMENT, please locate the model plate on the equipment and copy the information to the sample model plate provided to the right. You can locate the model plate by standing at the operating positionand looking down at the rear of the Edger/Trencher. This information will be necessary to use the manufacturer's web site and/or help from the Customer Support Department or an authorized service dealer.

Model Number **Serial Number**

MTD For A Growing World.™

www.mtdproducts.com

MTD LLC
P.O. BOX 361131
CLEVELAND, OH 44136
330-220-4683
800-800-7310

Customer Support

Please do *NOT* return the unit to the retailer from which it was purchased, without first contacting Customer Support.

If you have difficulty assembling this product or have any questions regarding the controls, operation, or maintenance of this unit, you can seek help from the experts. Choose from the options below:

- Visit **www.mtdproducts.com**
- Call a Customer Support Representative at **1-800-800-7310**.
- The **engine manufacturer** is responsible for all engine-related issues with regards to performance, power-rating, specifications, warranty and service. Please refer to the engine manufacturer's Owner's/Operator's Manual, packed separately with your unit, for more information.

Please take a moment to review your safety labels.

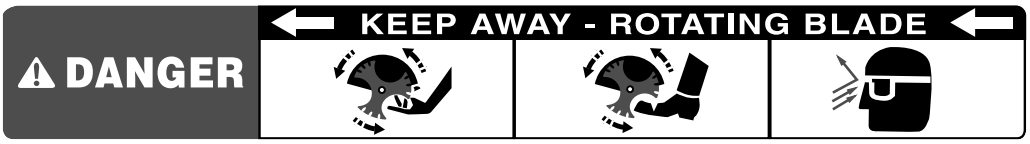





1

Safety Labels

WARNING

This symbol points out important safety instructions which, if not followed, could endanger the personal safety and/or property of yourself and others. Read and follow all instructions in this manual before attempting to operate this machine. Failure to comply with these instructions may result in personal injury. When you see this symbol.
HEED ITS WARNING

Your Responsibility

Restrict the use of this power machine to persons who read, understand and follow the warnings and instructions in this manual and on the machine.

2

Safe Operation Practices



WARNING

This symbol points out important safety instructions which, if not followed, could endanger the personal safety and/or property of yourself and others. Read and follow all instructions in this manual before attempting to operate this machine. Failure to comply with these instructions may result in personal injury. When you see this symbol.

HEED ITS WARNING

Your Responsibility

Restrict the use of this power machine to persons who read, understand and follow the warnings and instructions in this manual and on the machine.



WARNING: Engine Exhaust, some of its constituents, and certain vehicle components contain or emit chemicals known to State of California to cause cancer and birth defects or other reproductive harm.

DANGER: This machine was built to be operated according to the rules for safe operation in this manual. As with any type of power equipment, carelessness or error on the part of the operator can result in serious injury. This machine is capable of amputating hands and feet and throwing objects. Failure to observe the following safety instructions could result in serious injury or death.

Children

Tragic accidents can occur if operator is not alert to presence of children. Children are often attracted to power equipment such as lawn edgers. They do not understand the dangers. Never assume that children will remain where you last saw them.

1. Keep children out of the mowing area and under watchful care of a responsible adult other than the operator.
2. Be alert and turn lawn edger off if a child enters the area.
3. Before and while moving backwards, look behind and down for small children.
4. Use extreme care when approaching blind corners, doorways, shrubs, trees, or other objects that may obscure your vision of a child who may run into the lawn edger.
5. Keep children away from hot or running engines. They can suffer burns from a hot muffler.
6. Never allow children under 14 years old to operate an edger. Children 14 years old and over should read and understand operation instructions and safety rules in this manual and should be trained and supervised by a parent.

Operation

Safe Handling Of Gasoline:

1. To avoid personal injury or property damage use extreme care in handling gasoline. Gasoline is extremely flammable and the vapors are explosive. Serious personal injury can occur when gasoline is spilled on yourself or your clothes which can ignite.
2. Wash your skin and change clothes immediately.
3. Use only an approved gasoline container.
4. Never fill containers inside a vehicle or on a truck or trailer bed with a plastic liner. Always place containers on the ground away from your vehicle before filling.
5. Remove gas-powered equipment from the truck or trailer and refuel it on the ground. If this is not possible, then refuel such equipment on a trailer with a portable container, rather than from a gasoline dispenser nozzle.
6. Keep the nozzle in contact with the rim of the fuel tank or container opening at all times until fueling is complete. Do not use a nozzle lock-open device.
7. Extinguish all cigarettes, cigars, pipes and other sources of ignition.
8. Never fuel machine indoors because flammable vapors will accumulate in the area.
9. Never remove gas cap or add fuel while engine is hot or running. Allow engine to cool at least two minutes before refueling.
10. Never over fill fuel tank. Fill tank to no more than ½ inch below bottom of filler neck to provide for fuel expansion.
11. Replace gasoline cap and tighten securely.
12. If gasoline is spilled, wipe it off the engine and equipment. Move unit to another area. Wait 5 minutes before starting engine.
13. Never store the machine or fuel container near an open flame, spark or pilot light as on a water heater, space heater, furnace, clothes dryer or other gas appliances.
14. To reduce fire hazard, keep lawn edger free of grass, leaves, or other debris build-up. Clean up oil or fuel spillage and remove any fuel soaked debris.
15. Allow a lawn edger to cool at least 5 minutes5 minutes before storing.

General Operation:

1. Read this operator's manual carefully in its entirety before attempting to assemble this machine. Read, understand, and follow all instructions on the machine and in the manual(s) before operation. Be completely familiar with the controls and the proper use of this machine before operating it. Keep this manual in a safe place for future and regular reference and for ordering replacement parts.
2. This machine is a precision piece of power equipment, not a plaything. Therefore, exercise extreme caution at all times. Your unit has been designed to perform one job: to edge lawn. Do not use it for any other purpose.
3. Never allow children under 14 years old to operate this machine. Children 14 years old and over should read and understand the instructions in this manual and should be trained and supervised by a parent. Only responsible individuals who are familiar with these rules of safe operation should be allowed to use this machine.
4. To help avoid blade contact or a thrown object injury, stay in operator zone behind handles and keep children, bystanders, helpers and pets at least 75 feet from lawn edger while it is in operation. Stop machine if anyone enters area.
5. Thoroughly inspect the area where the equipment is to be used. Remove all stones, sticks, wire, bones, toys and other foreign objects which could be tripped over or picked

up and thrown by the blade. Thrown objects can cause serious personal injury.

6. Always wear safety glasses or safety goggles during operation and while performing an adjustment or repair to protect your eyes. Thrown objects which ricochet can cause serious injury to the eyes.
7. Wear sturdy, rough-soled work shoes and close-fitting slacks and shirts. Shirts and pants that cover the arms and legs and steel-toed shoes are recommended. Never operate this machine in bare feet, sandals, slippery or light weight (e.g. canvas) shoes.
8. Never attempt to make any adjustments while the engine is running, except where specifically recommended in the operator's manual.
9. To avoid personal injury or property damage use extreme care in handling gasoline. Gasoline is extremely flammable and the vapors are explosive. Serious personal injury can occur when gasoline is spilled on yourself or your clothes which can ignite. Washer your skin and change clothes immediately.
10. Do not put hands or feet near rotating parts. Contact with the rotating blade can amputate hands and feet.
11. The blade control handle is a safety device. Never bypass its operation. Doing so, makes the machine unsafe and may cause personal injury.
12. Never operate without blade guard, debris shield and blade control handle in place and working.
13. Never operate with damaged safety devices. Failure to do so, can result in personal injury.
14. Never run an engine indoors or in a poorly ventilated area. Engine exhaust contains carbon monoxide, an odorless and deadly gas.
15. Do not operate machine while under the influence of alcohol or drugs.
16. Muffler and engine become hot and can cause a burn. Do not touch.
17. Never operate this machine without good visibility or light. Always be sure of your footing and keep a firm hold on the handles. Walk, never run.
18. Do not operate this machine if it has been dropped or damaged. Return machine to your nearest authorized servicing dealer for examination and repair.
29. Do not operate this machine with a damaged or excessively worn cutting blade.
20. Never attempt to clear material from the blade guard while the engine is running. Shut the engine off, disconnect the spark plug wire and ground against the engine to prevent unintended starting.
21. Do not overload machine capacity by attempting to edge at too fast of a rate.
22. Stay alert for uneven sidewalks, terrain etc. Always push slowly over rough surfaces. Do not use this machine on gravel surfaces.
23. Do not operate machine in rain or wet soil conditions.
    Always operate machine from behind the handles and position yourself where the direct line of sight to cutting blade is blocked by guards.
24. Always stop engine when edging or trimming is delayed or when transporting machine from one location to another.
    Never leave a running machine unattended.
    Stop the engine, disconnect spark plug wire and ground against the engine to prevent unintended starting.
25. Only use parts and accessories made for this machine by the manufacturer. Failure to do so, can result in personal injury.
26. If situations occur which are not covered in this manual, use care and good judgment. Call 1-800-800-7310 for Customer Support and the name of your nearest dealer.

Service

1. Never run an engine indoors or in a poorly ventilated area. Engine exhaust contains carbon monoxide, an odorless and deadly gas.
2. Before cleaning, repairing, or inspecting, make certain the blade and all moving parts have stopped. Disconnect the spark plug wire and ground against the engine to prevent unintended starting.
3. Check the blade and engine mounting bolts at frequent intervals for proper tightness. Also, visually inspect blade for damage (e.g., bent, cracked, worn) Replace blade with the original equipment manufacture's (O.E.M.) blade only, listed in this manual. "Use of parts which do not meet the original equipment specifications may lead to improper performance and compromise safety!"
4. Lawn edger blades are sharp and can cut. Wrap the blade or wear gloves, and use extra caution when servicing them.
5. Keep all nuts, bolts, and screws tight to be sure the equipment is in safe working condition.
6. Never tamper with safety devices. Check their proper operation regularly.
7. After striking a foreign object, stop the engine, disconnect the spark plug wire and ground against the engine. Thoroughly inspect the lawn edger for any damage. Repair the damage before starting and operating the lawn edger.
8. Never attempt to make a wheel or cutting height adjustment while the engine is running.
9. Many components on your new edger can wear with continued use. For safety protection, frequently check all edger components and replace immediately with original equipment manufacturer's (O.E.M.) parts only, listed in this manual. "Use of parts which do not meet the original equipment specifications may lead to improper performance and compromise safety!"
10. Do not change the engine governor setting or overspeed the engine. The governor controls the maximum safe operating speed of the engine.
11. Maintain or replace safety labels, as necessary.
12. Observe proper disposal laws and regulations. Improper disposal of fluids and materials can harm the environment.

2

Safe Operation Practices



WARNING

This symbol points out important safety instructions which, if not followed, could endanger the personal safety and/or property of yourself and others. Read and follow all instructions in this manual before attempting to operate this machine. Failure to comply with these instructions may result in personal injury. When you see this symbol.

HEED ITS WARNING

Your Responsibility

Restrict the use of this power machine to persons who read, understand and follow the warnings and instructions in this manual and on the machine.

3

Assembling Your New Edger

WARNING

The edger blade WILL rotate when the starter rope is pulled.

IMPORTANT:

This unit is shipped WITHOUT GASOLINE or OIL. After setting up the unit, service engine with gasoline and oil as instructed in the separate engine manual packed with your unit.

NOTE: Specifications are subject to change without notification or obligation. Images my not reflect your exact model and are for reference purposes only.

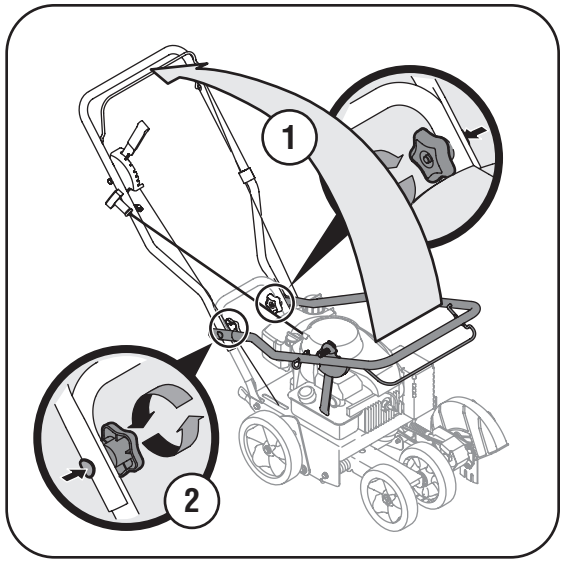

Figure 3–1

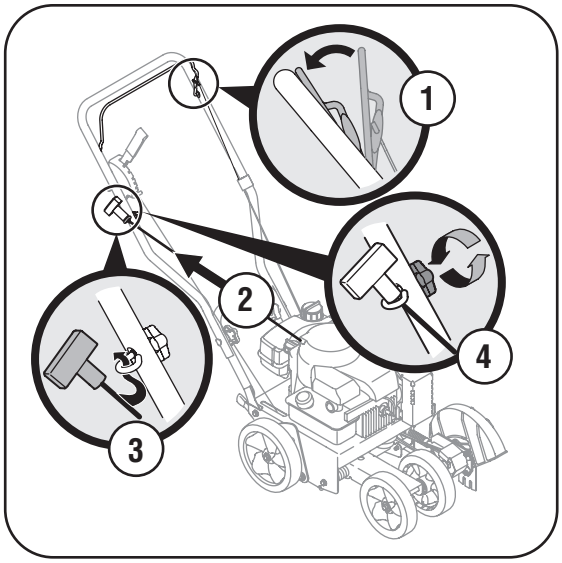

Figure 3–2

Securing the Handle

IMPORTANT: This unit is shipped WITHOUT GASOLINE or OIL. After setting up the unit, service engine with gasoline and oil as instructed in the separate engine manual packed with your unit.

NOTE: *Reference to right or left hand side of the edger is observed from the operating position.*

Positioning the Edger Handles

Remove and discard any packaging cardboard that may be present between the upper handle and the lower handle.

1. Pivot the upper handle upward until it snaps into place. See Fig. 3–1.
2. Tighten the hand knobs, which are located on both the left and right sides of the handle.

Attaching the Starter Rope

1. Locate the rope guide found on the right side of the upper handle. Loosen, but do NOT remove, the wing knob which secures the rope guide to the upper handle. See Fig. 3–2.
2. Stand behind the unit and hold the blade control against the upper handle.
3. Gently pull the starter rope out of the engine.

WARNING: The edger blade WILL rotate when the starter rope is pulled.

NOTE: The starter rope will not pull out of the engine unless the blade control *(refer to Figure 3–2)* is depressed against the upper handle.

4. Slip the starter rope through the top of the rope guide. Retighten the wing knob which secures the rope guide to the upper handle.

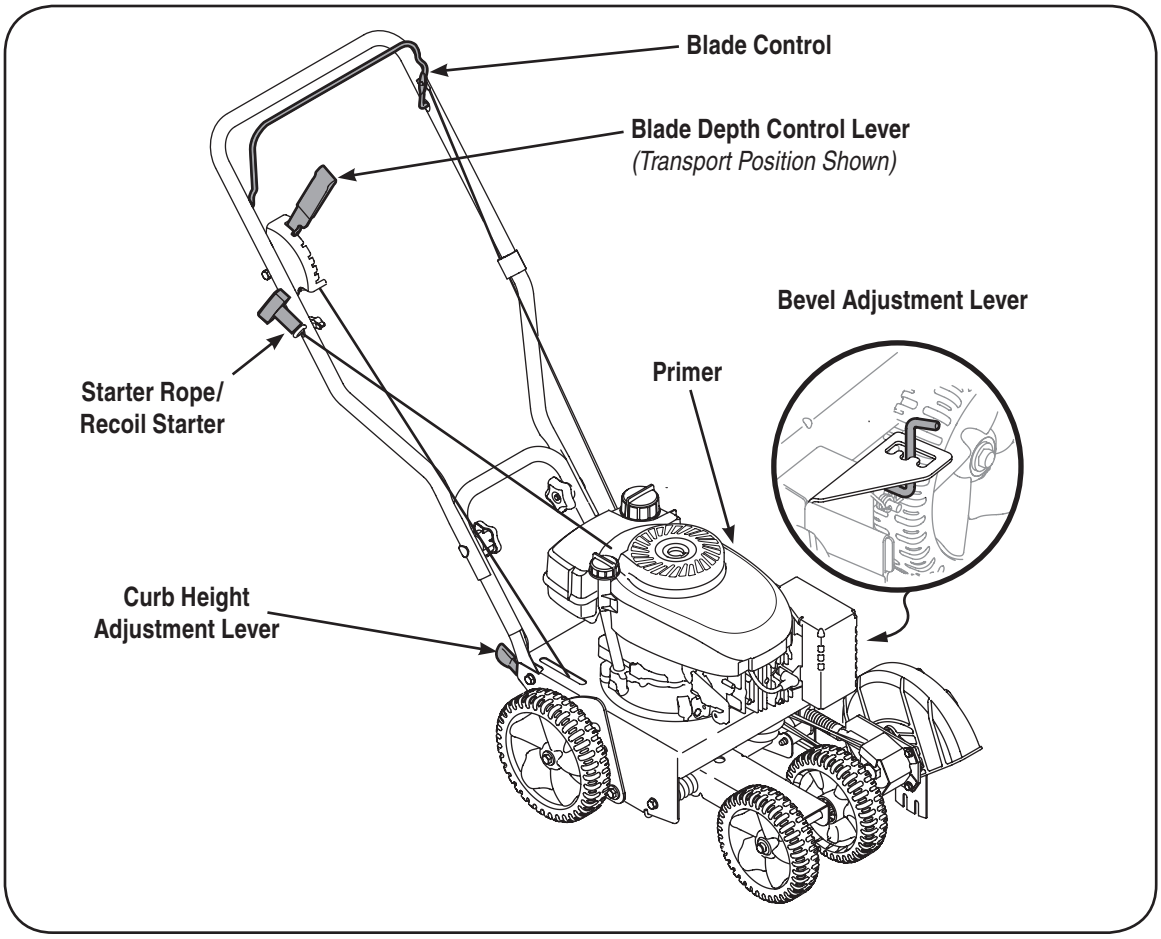

Figure 4–1

4

Know Your Edger

WARNING:

Be familiar with all controls and their proper operation. Know how to stop the machine and disengage them quickly.

WARNING: Be familiar with all controls and their proper operation. Know how to stop the machine and disengage them quickly.

NOTE: *Refer to the Engine Manual packed with your edger for a detailed description of all engine-related controls and components.*

Starter Rope / Recoil Starter

The starter rope/recoil starter is used to start the engine. See Fig. 4–1

Primer

The primer is used to pump gas into the carburetor and aid in starting the engine. Use it to start a cold engine, but do not use it to restart a warm engine after a short shutdown. See Fig. 4–1

NOTE: *Refer to the Engine Manual packed with your edger for a detailed description of all engine-related controls and components.*

Blade Control

Located on the upper handle, the blade control must be depressed against the upper handle in order to operate the unit. Releasing the blade control stops the engine and the edger blade. See Fig. 4–1.

Blade Depth Control Lever

The blade depth control lever is located on the right side of the upper handle. It is used to control the depth of the cut. The further forward the blade depth control lever is moved, the deeper into the soil the edger blade will cut. See Fig. 4–1.

Curb Height Adjustment Lever

The curb height adjustment lever is found on the rear portion of the edger. When placed in an applicable notch, it aids in stabilizing the edger while edging grass along a curb. See Fig. 4–1.

Bevel Adjustment Lever

The bevel adjustment lever is located on the front, left portion of the edger, behind the edger blade. It is used to vary the angle of the edger blade between one of three positions for edging/trenching or beveled edging. See Fig. 4–1.

IMPORTANT: Become familiar with all the controls before operating the edger.

NOTE: *Refer to the Engine Manual packed with your edger for a detailed description of all engine-related controls and components.*

IMPORTANT:
Become familiar with all the controls before operating the edger.

NOTE: *Specifications are subject to change without notification or obligation. Images may not reflect your exact model and are for reference purposes only.*

5

Operation And Adjustment

WARNING

Do not lower blade if blade is over concrete, asphalt, rocks or the like. The blade can strike the supporting surface, resulting in personal injury or property damage.

Never fill fuel tank indoors, with engine running or until the engine has been allowed to cool for at least two minutes after running.

The "Blade Control" is a safety device. Never attempt to bypass its operation.

Rotating cutting blade may throw objects causing personal injury. Keep area clear of bystanders and do not operate without guards in place.

The operation of any edger can result in foreign objects being thrown into the eyes, which can result in severe eye damage. Always wear safety glasses or eye shields. We recommend wide vision safety mask for over spectacles or standard safety glasses.

WARNING: Do not lower blade if blade is over concrete, asphalt, rocks or the like. Blade can strike supporting surface, resulting in personal injury or property damage.

Adding Gasoline And Oil

Service the engine with gasoline and oil as instructed in the Engine Manual packed with your edger. Read instructions carefully.

WARNING: Never fill fuel tank indoors, with engine running or until the engine has been allowed to cool for at least two minutes after running.

Starting The Engine

NOTE: *Refer to the Engine Manual packed with your edger for a detailed description of all engine-related controls and components.*

To start the edger's engine, proceed as follows:

1. Attach the spark plug wire to the spark plug. Make certain the metal cap on the end of the spark plug wire is fastened securely over the metal tip on the spark plug.
2. Move the blade depth control lever back to the START position in the adjacent (top) notch.
3. Depress the primer bulb three times, pausing two to three seconds between each push. In cold weather (below 50°F /19°C), it may be necessary to depress the primer bulb four or five times.

IMPORTANT: Using the primer to restart a warm engine after a short shutdown is usually not necessary. Doing so may result in a flooded engine.

4. Standing behind the unit, depress the blade control and hold it against the upper handle with your left hand.

WARNING: This control mechanism is a safety device. Never attempt to bypass its operation.

5. With your right hand, grasp the recoil starter handle and slowly pull the rope outward until engine reaches the start of its compression cycle (the rope will pull slightly harder at this point).
6. After slowly allowing the rope to recoil, pull the rope with a rapid, continuous, full arm stroke. Keep a firm grip on starter handle throughout the entire stroke.
7. Allow the starter handle to slowly return to the eyebolt.

NOTE: *If the engine fails to start after three pulls, depress the primer an additional two times before pulling the starter rope again.*

Stopping The Engine

To stop the edger's engine, release the blade control.

NOTE: *See your engine manual packed with your unit for more detailed instructions.*

WARNING: Rotating cutting blade may throw objects causing personal injury. Keep area clear of bystanders and do not operate without guards in place.

Edging

To begin edging, proceed as follows:

1. Move unit to area to be edged, making sure that the left rear wheel is on a hard surface and the blade is over the area to be cut. See Fig. 5–1.
2. With blade control lever in START position, make a pass along area to be edged before proceeding to the next notch. The further forward blade depth control lever is moved, the deeper or lower the blade will cut into the ground. Several passes may be necessary to obtain desired depth of cut. Do not lower blade more than one depth notch at a time without making a pass.
3. For best results, proceed slowly along path being edged, slowly moving edger back and forth through cutting area, again making sure to keep the left rear wheel on the hard surface and the blade in the cutting path, close to but not touching the edge of the hard surface.
4. Once you have finished edging selected area, raise the blade control lever back into the START position, move to the next area to be edged, and proceed again from step 1.the curb to be edged along.

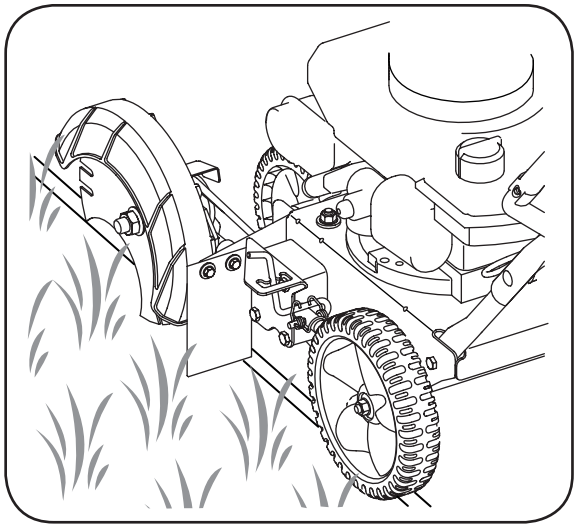

Figure 5–1

Edging Along A Curb

The right, rear wheel of the edger can be lowered into one of five positions to ease the task of edging along a curb.

To adjust the height of curb wheel, proceed as follows:

1. Lower the right, rear wheel by moving the curb height adjustment lever slightly to the left. See Fig. 5–2.
2. Pivot the right, rear wheel into an applicable position in relation to the height of the curb to be edged along. See Fig. 5–2
3. Release the curb height adjustment lever to lock the wheel in position. See Fig. 5–2.

Bevel Adjustment

The angle of the edger blade can be adjusted by placing the bevel adjustment in one of three positions for edging. See Fig. 5–3.

WARNING: Rotating cutting blade may throw objects causing personal injury. Keep area clear of bystanders and do not operate without guards in place.

Beveling

In order to achieve a bevelled edge, set the bevel adjustment lever (refer to Fig. 5–3) in the first (left hand) or third (right hand) notch to place the edger blade in position for beveling (See Fig. 5–4).

Trenching *(Optional)*

You can utilize the edger's optional trenching feature in order to create a wider cutting path for such things as laying wire for landscape lighting.

WARNING: Disconnect the spark plug wire and ground against the engine before performing the following steps.

WARNING: The edger blade is sharp. Wear leather work gloves to protect your hands when working around the edger blade.

1. Use two wrenches (one wrench to prevent hex bolt head from spinning and the other to unthread the flange nut) to remove flange nut that secures edger blade, leaving the edger blade in place. SeeFig. 5–5.
5. Install the additional edger blade supplied with your unit (model 554) and the flat washer. See Fig. 5–5.
6. Secure with the flange nut removed earlier.

IMPORTANT: Use a torque wrench to tighten the flange nut to between 37 foot-lbs. and 50 foot-lbs.

IMPORTANT: Make certain that drive belt is seated correctly on blade spindle and that it is riding smoothly on spindle sheaves and is not pinched between them. Repeat first three steps if belt is pinched.

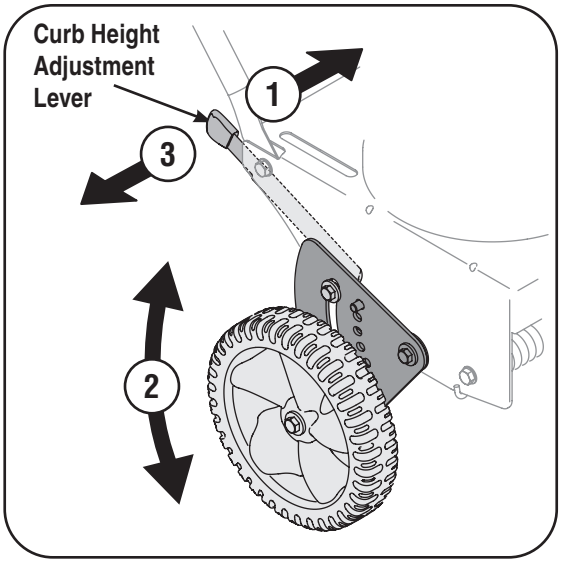

Figure 5–2

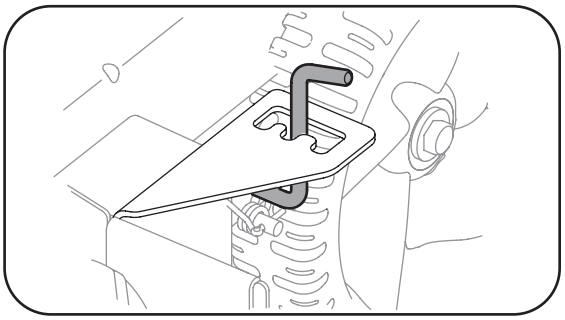

Figure 5–3

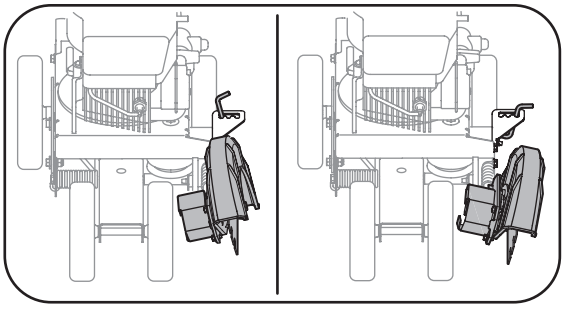

Figure 5–4

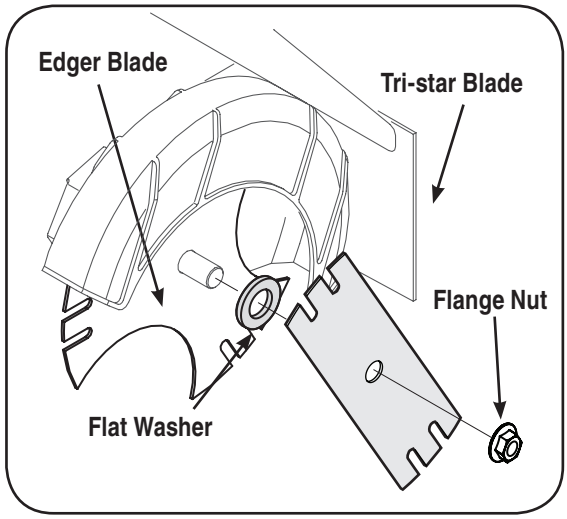

Figure 5–5

5

Operation And Adjustment

WARNING

Disconnect the spark plug wire and ground against the Disconnect the spark plug wire and ground against the engine before performing the following steps.

The edger blade is sharp. Wear leather work gloves to protect your hands when working around the edger blade.

NOTE: Specifications are subject to change without notification or obligation. Images my not reflect your exact model and are for reference purposes only.

6

Maintaining & Servicing Your Edger

WARNING

Disconnect the spark plug wire and ground against the engine before performing any adjustment, repairs or maintenance.

The edger blade is sharp. Wear leather work gloves to protect your hands when working around the edger blade.

Disconnect the spark plug wire and ground against engine before performing the following steps.

NOTE: Specifications are subject to change without notification or obligation. Images my not reflect your exact model and are for reference purposes only.

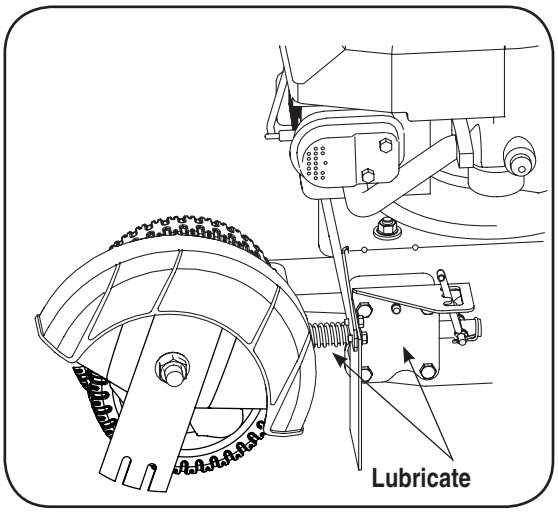

Figure 6–1

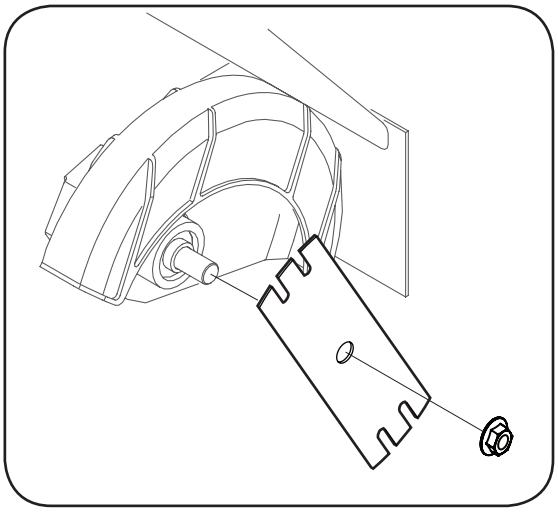

Figure 6–2

WARNING: Disconnect the spark plug wire and ground against the engine before performing any adjustment, repairs or maintenance.

Lubrication

Engine

Refer to the Engine Manual packed with your edger for a detailed description of all engine-related service specifications.

Wheels

Lubricate the wheels and bearings at least once a season with a light oil. Also if the wheels are removed for any reason, lubricate the surface of the axle bolt and the inner surface of the wheel with light oil.

Pivot Points

Lubricate the pivot points on the blade control bail, blade depth control lever, and if applicable, the blade adjustment lever, and curb height adjustment lever with light oil at least once a season.

Bearing Block

Lubricate the bearing block every 25 hours or at least once a season. Simply apply oil at each end of the cover plate. See Fig. 6–1.

Replacing the Edger Blade

WARNING: The edger blade is sharp. Wear leather work gloves to protect your hands when working around the edger blade.

WARNING: Disconnect the spark plug wire and ground against engine before performing the following steps.

1. Use two wrenches (one wrench to prevent the hex bolt head from spinning and the other to remove the flange nut) to remove the edger blade. Refer to Fig. 6–2.
2. Remove and discard the edger blade but retain the flange nut.
3. Install the replacement edger blade and the flange nut removed earlier.

IMPORTANT: Use a torque wrench to tighten the flange nut to between 37 foot-lbs. and 50 foot-lbs.

IMPORTANT: Make certain that the drive belt is seated correctly on the blade spindle and that it is riding smoothly on the spindle sheaves and is not pinched between them. Repeat the first three steps if the belt is pinched.

Replacing the Drive Belt

IMPORTANT: To aid in reassembly, note the orientation of the drive belt on the two idler pulleys and the engine flywheel pulley prior to performing the following steps. Refer to Fig. 6–3.

The edger drive belt is subject to wear and should be replaced if any signs of cracking, shredding or rotting are present. To replace the belt, proceed as follows:

1. Working in front of the edger, loosen the flange lock nut on top of frame, allowing the idler pulley assembly to pivot slightly out from the frame. See Fig. 6–3.
2. With your other hand, carefully reach under the rear of the unit and remove the belt from around the engine flywheel pulley. See Fig. 6–3.
3. Remove the spindle sheaves belt guard by removing the two self-tapping screws which secure it to the blade plate assembly. See Fig. 6–4.
4. Carefully remove the belt from off of the pulleys, again making sure to note the orientation of the belt. Discard the belt. See Fig. 6–4.
5. Working from the front of the edger, place the belt onto the spindle sheaves, route it back onto the two idler pulleys, and then place it onto the engine flywheel pulley.

IMPORTANT: Make certain that the "V" side of the belt is seated into the top pulley and the flat side of the belt is seated into the bottom pulley. See Fig. 6–3.

6. Reinstall the spindle sheaves belt guard with the self tapping screws removed earlier.
7. Make certain that the drive belt is on the engine flywheel pulley and idler pulleys, and retighten the flange lock nut on the top of the frame.

IMPORTANT: Make certain that the drive belt is seated correctly and that it is riding smoothly on the spindle sheaves and is not pinched between them. Repeat the first three steps if the belt is pinched.

WARNING: Never operate the edger without the spindle sheaves belt guard in place.

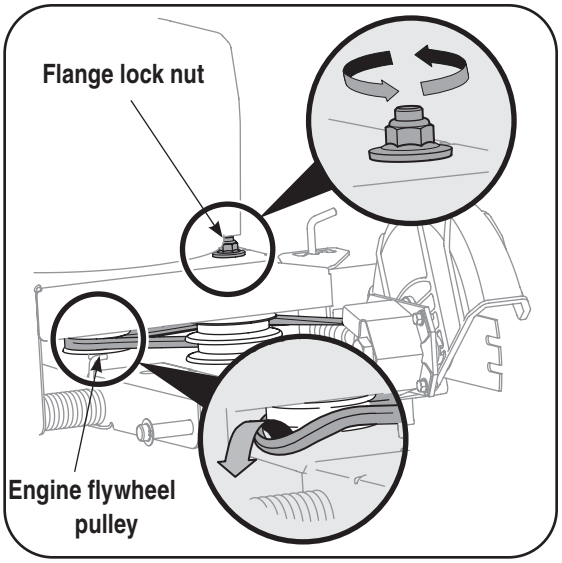

Figure 6–3

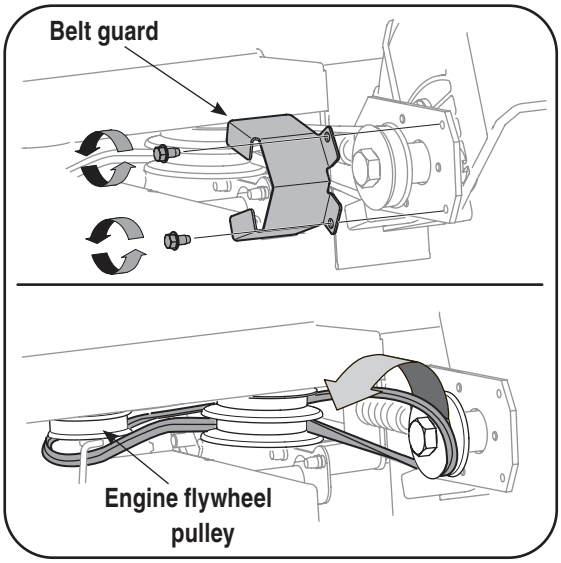

Figure 6–4

6

Maintaining and Servicing Your Edger

WARNING

Never operate the edger without the spindle sheaves belt guard in place.

NOTE: Specifications are subject to change without notification or obligation. Images my not reflect your exact model and are for reference purposes only.

Off-Season Storage

Observe the following when preparing the edger for long-term storage:

1. Clean and lubricate unit thoroughly as instructed maintenance section of this manual.
2. Refer to the Engine Manual packed separately with the edger for engine manufacturers's storage instructions.
3. Coat the edger blade with chassis grease to prevent rusting and corrosion.
4. Store the edger in a dry, clean area. Do not store next to any corrosive materials, such as lawn fertilizer.
5. Coat the edger, especially any springs and bearings with a light oil or silicone spray.

IMPORTANT: When storing any type of power equipment in an poorly ventilated or metal storage shed, care should be taken to rustproof the equipment.

Notes



NOTE: Specifications are subject to change without notification or obligation. Images my not reflect your exact model and are for reference purposes only.

Troubleshooting Guide

Problem	Possible Cause(s)	Corrective Action
Engine fails to start	Dirty air cleaner	Refer to the Engine Manual packed with your unit.
	Engine needs to be primed	Push primer bulb two or three times.
	Fuel tank empty	Fill tank with clean, fresh gasoline.
	Stale fuel in gasoline tank	Drain gasoline and refill tank with clean, fresh gasoline.
	Spark plug wire disconnected.	Connect the spark plug wire to the spark plug.
	Spark plug fouled	Clean, adjust gap or replace spark plug.
	Engine flooded	Refer to the Engine Manual packed with your unit.
Engine runs erratic	Spark plug wire loose	Connect and tighten spark plug wire.
	Stale fuel in gasoline tank	Drain gasoline & refill tank with clean, fresh gasoline.
	Vent in gas cap plugged	Clear vent of any debris.
	Water or dirt in fuel system	Drain fuel tank. Refill with fresh fuel.
	Dirty air cleaner	Refer to the Engine Manual packed with your unit.
	Carburetor out of adjustment	Refer to the Engine Manual packed with your unit.
Engine Overheats	Engine oil level low	Fill crankcase with proper oil.
	Air flow restricted	Clean the area around the engine's cooling fins.
	Dirty air filter	Replace the engine's air filter.
	Carburetor not adjusted properly	Refer to the Engine Manual packed with your unit.
Excessive Vibration	Edger blade bent or damaged	Replace edger blade.
	Blade spindle bent or damaged	Contact an authorized MTD service dealer.
Drivebelt Slips	Belt worn or stretched	Replace drive belt.

For parts and/or accessories please call 1-330-220-4683, or 1-800-800-7310

or visit

www.mtdproducts.com

NOTE: Specifications are subject to change without notification or obligation. Images my not reflect your exact model and are for reference purposes only.

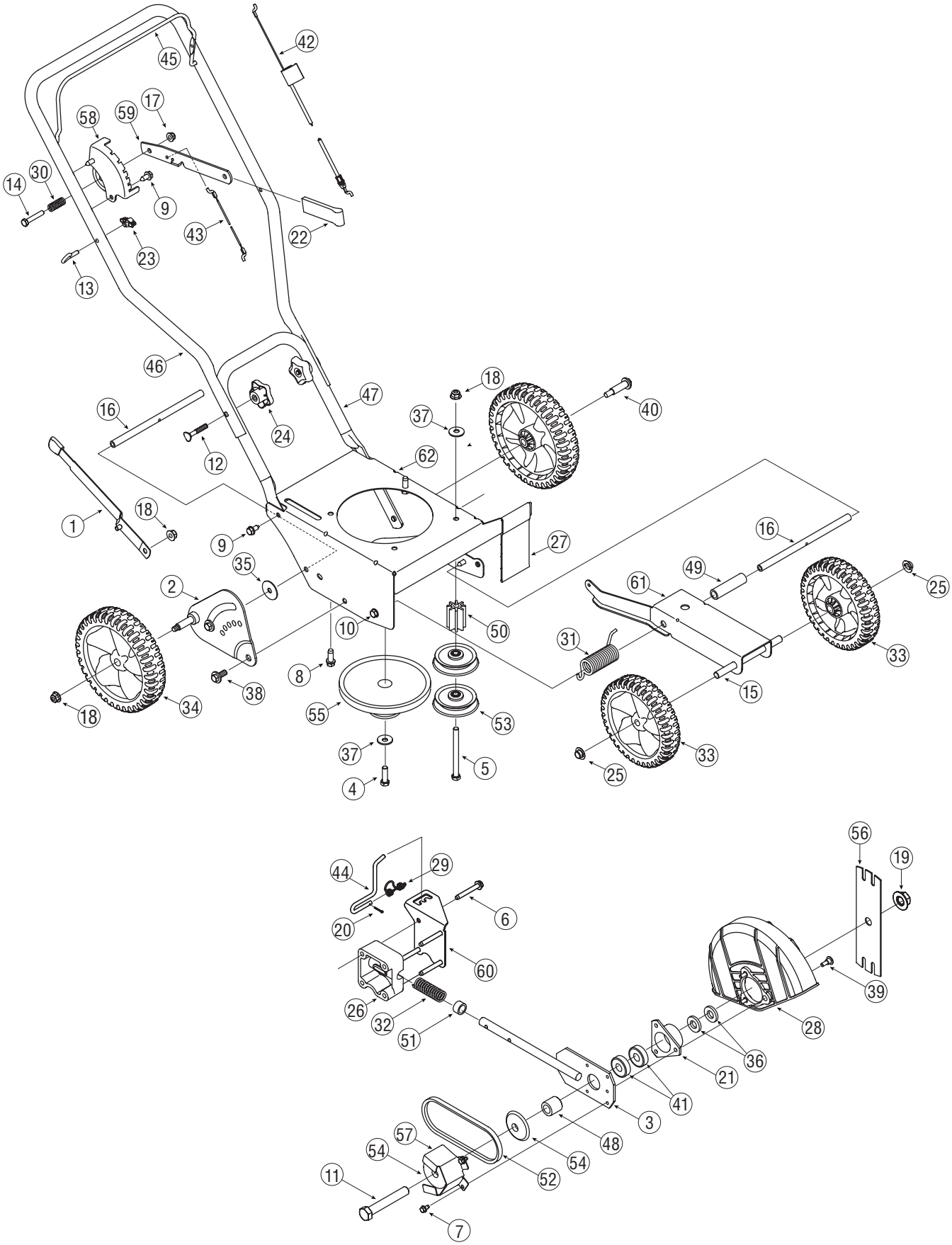
42
45
17
58
59
30
14
9
43
22
23
13
46
18
47
40
16
37
24
12
62
1
18
9
27
16
35
49
25
2
61
10
50
31
33
8
38
15
18
34
55
53
37
33
5
25
4
56
19
44
29
6
20
60
39
26
32
28
51
36
21
41
3
57
48
54
54
11
52
7

Ref.	Part No.	Description
1	687-02022	Curb Height Adjustment Lever
2	687-02125A	Curb Height Adjuster Plate
3	687-02126	Blade Plate Assembly
4	710-0191	Screw 3/8-24
5	710-0411	Screw 3/8-16
6	710-04389	Hex Screw, 5/16-18
7	710-0599	Self-tapping Screw, 1/4-20
8	710-0654A	Screw, 3/8-16
9	710-0726	Hex Screw, 5/16-12
10	710-0870	Hex Screw 5/16-18
11	710-1143A	Hex Screw, 5/8-18
12	710-1174	Carriage Bolt, 5/16-18
13	710-1205	Rope Guide (Eye Bolt)
14	710-3180	Hex Screw, 5/16-18
15	711-04361	Axle Shaft .50x6.65
16	711-04440	Frame Spacer .50x9.25
17	712-04063	Lock Flange Nut, 5/16-18
18	712-04065	Flange Nut 3/8-16
19	712-0417A	Flange Nut, 5/8-18
20	714-3010	Clevis Pin 3/32 x .625
21	718-04012	Bearing Cup
22	720-0142	Grip
23	720-0279	Wing Nut
24	720-04072	Star Knob
25	726-0299	Push Cap 1/2” rod
26	731-04207	Bearing Block
27	731-05063	Debris Guard
28	731-05064	Blade Guard
29	732-0188A	Double Torsion Spring
30	732-0369	Compression Spring
31	732-04045	Torsion Spring

Ref.	Part No.	Description
32	732-04169	Compression Spring
33	734-1988	Wheel 7 x 1.8 Spoke Bar Grey †
34	734-1987	Wheel 8 x 1.8 Spoke Bar Grey †
35	736-0234	Flat Washer, .385 x 1.5 x .075
36	736-04088	Flat Washer .635x1.24x.181
37	736-0452	Bell Washer,.396 x 1.140
38	738-04149	Shoulder Screw, 3/8-16
39	738-0706C	Shoulder Screw
40	738-0929	Shoulder Screw, 3/8-16
41	741-0524	Bearing, .625 ID x 1.57 OD
42	746-04052	Control Cable (Tecumseh)
43	746-04036	Wheel Adjustment Cable
44	747-04110	Blade Adjustment Rod
45	747-0976A	Bail Handle
46	749-04183	Upper Handle
47	749-04234	Lower Handle
48	750-04105	Spacer, .63 x 1.12 x 1.06
49	750-04129	Spacer
50	750-04142	Pulley Mount Spacer
51	750-0547	Spacer, .64 x.88 x .50
52	754-04032B	Belt
53	756-04148	Flat Idler Pulley, 2.5 OD
54	756-0449	Sheave
55	756-1150A	Combination Flywheel Pulley
56	781-0080	Edger Blade
57	781-0427	Belt Guard
58	781-0741A	Depth Index Bracket
59	781-0742	Depth Index Lever
60	787-01081A	Cover Plate
61	787-01239	Dual Wheel Bracket
62	787-01304	Frame

V-BELTS are specially designed to engage and disengage safely. A substitute (non-OEM) V-Belt can be dangerous by not disengaging completely.

† Optional

9

Part List:
Handle/Frame/ Wheel Assembly
Model 550 Series

For parts and/or accessories please call 1-330-220-4683, or 1-800-800-7310

www.mtdproducts.com

NOTE: Specifications are subject to change without notification or obligation. Images my not reflect your exact model and are for reference purposes only.

MANUFACTURER'S LIMITED WARRANTY FOR



The limited warranty set forth below is given by MTD LLC with respect to new merchandise purchased and used in the United States, its possessions and territories.

"MTD" warrants this product against defects in material and workmanship for a period of two (2) years commencing on the date of original purchase and will, at its option, repair or replace, free of charge, any part found to be defective in materials or workmanship. This limited warranty shall only apply if this product has been operated and maintained in accordance with the Operator's Manual furnished with the product, and has not been subject to misuse, abuse, commercial use, neglect, accident, improper maintenance, alteration, vandalism, theft, fire, water, or damage because of other peril or natural disaster. Damage resulting from the installation or use of any part, accessory or attachment not approved by MTD for use with the product(s) covered by this manual will void your warranty as to any resulting damage.

Normal wear parts are warranted to be free from defects in material and workmanship for a period of thirty (30) days from the date of purchase. Normal wear parts include, but are not limited to items such as: batteries, belts, blades, blade adapters, grass bags, rider deck wheels, seats, snow thrower skid shoes, shave plates, auger spiral rubber and tires.

HOW TO OBTAIN SERVICE: Warranty service is available, WITH PROOF OF PURCHASE, through your local authorized service dealer. To locate the dealer in your area, check your Yellow Pages, or contact MTD LLC at P.O. Box 361131, Cleveland, Ohio 44136-0019, or call 1-800-800-7310 or 1-330-220-4683 or log on to our Web site at www.mtdproducts.com.

This limited warranty does **not** provide coverage in the following cases:

a. The engine or component parts thereof. These items may carry a separate manufacturer's warranty. Refer to applicable manufacturer's warranty for terms and conditions.

b. Log splitter pumps, valves, and cylinders have a separate one year warranty.

c. Routine maintenance items such as lubricants, filters, blade sharpening, tune-ups, brake adjustments, clutch adjustments, deck adjustments, and normal deterioration of the exterior finish due to use or exposure.

d. Service completed by someone other than an authorized service dealer.

e. MTD does not extend any warranty for products sold or exported outside of the United States, its possessions and territories, except those sold through MTD's authorized channels of export distribution.

f. Replacement parts that are not genuine MTD parts.

g. Transportation charges and service calls.

No implied warranty, including any implied warranty of merchantability of fitness for a particular purpose, applies after the applicable period of express written warranty above as to the parts as identified. No other express warranty, whether written or oral, except as mentioned above, given by any person or entity, including a dealer or retailer, with respect to any product, shall bind MTD. During the period of the warranty, the exclusive remedy is repair or replacement of the product as set forth above.

The provisions as set forth in this warranty provide the sole and exclusive remedy arising from the sale. MTD shall not be liable for incidental or consequential loss or damage including, without limitation, expenses incurred for substitute or replacement lawn care services or for rental expenses to temporarily replace a warranted product.

Some states do not allow the exclusion or limitation of incidental or consequential damages, or limitations on how long an implied warranty lasts, so the above exclusions or limitations may not apply to you.

In no event shall recovery of any kind be greater than the amount of the purchase price of the product sold. **Alteration of safety features of the product shall void this warranty.** You assume the risk and liability for loss, damage, or injury to you and your property and/or to others and their property arising out of the misuse or inability to use the product. This limited warranty shall not extend to anyone other than the original purchaser or to the person for whom it was purchased as a gift.

HOW STATE LAW RELATES TO THIS WARRANTY: This limited warranty gives you specific legal rights, and you may also have other rights which vary from state to state.

IMPORTANT: Owner must present Original Proof of Purchase to obtain warranty coverage.

MTD LLC, P.O. BOX 361131 CLEVELAND, OHIO 44136-0019; Phone: 1-800-800-7310, 1-330-220-4683