Enclume



CONTRY HOME LOG BASKET

LR13

Enclume hearth racks are the ultimate in Quality, design, strength and function. Congratulations for owning one of the finest Storage racks made.

WARNING:
READ ALL OF THE INSTRUCTIONS BEFORE ASSEMBLING AND USING YOUR RACK.

All of our hammered steel racks are finished with an industrial wax designed to give years of protection to the rack. Cleaning is easily done with a damp cloth. Dry thoroughly after cleaning. If a touch-up is ever needed we recommend a "Pledge" like wax product.

Enclosed you will find everything needed for the assembly and use of your hearth rack. Two people make assembly and installation easier. The parts and hardware included are:

Hardware included:
4-⅜ x 5/8" Button head Screws
4- Hard Glides
1- 7/32" Allen Wrench

Components included:
2-Legs
2- Upright Supports

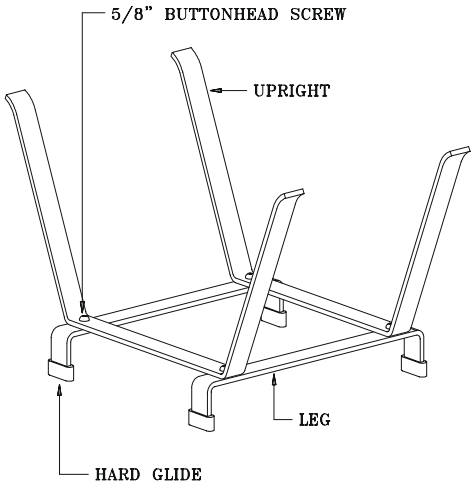

See reverse side for ASSEMBLY AND INSTALLATION INSTRUCTIONS

Limited Warranty: This product is warranted to be free of material defects for a period of five years from the date of purchase. Customer's exclusive remedy shall be the repair or replacement of the defective product and shall be subject to the following conditions: (1) notice of any defect is received by Enclume within the warranty period and (2) customer returns the defective product to Enclume Design Products, Inc. , 24 Colwell St.. , Port Hadlock, WA 98339, *postage prepaid* within *20* days following a return authorization number (which may be obtained by telephoning the number at the bottom of this instructions) being provided to the customer by Enclume. There are no other warranties, expressed or implied. **THERE ARE NO WARRANTIES OF MERCHANTABILITY OR FITNESS FOR A PARTICULAR PURPOSE. ENCLUME SPECIFICALLY DISCLAIMS ANY AND ALL INCIDENTAL OR CONSEQUENTIAL DAMAGES ARISING OUT OF THE PURCHASE OR USE OF ENCLUME'S PRODUCTS.**

If you need help, please call 1-877-ENCLUME
Enclume Design Products, Inc.
24 Colwell Street, Port Hadlock, WA. 98339
Phone 360-385-6100 • Fax 360-385-6156
www.enclume.com

ASSEMBLY AND INSTALLATION INSTRUCTIONS for LR13

Enclosed you will find everything needed for the assembly and use of your storage rack. Two people make assembly and installation easier. The parts and hardware included are:

Hardware included:
4-3/8” x 5/8" Button head Screws
4- Hard Glides
1- 7/32” Allen Wrench

Components included:
2-Legs
2- Upright Supports

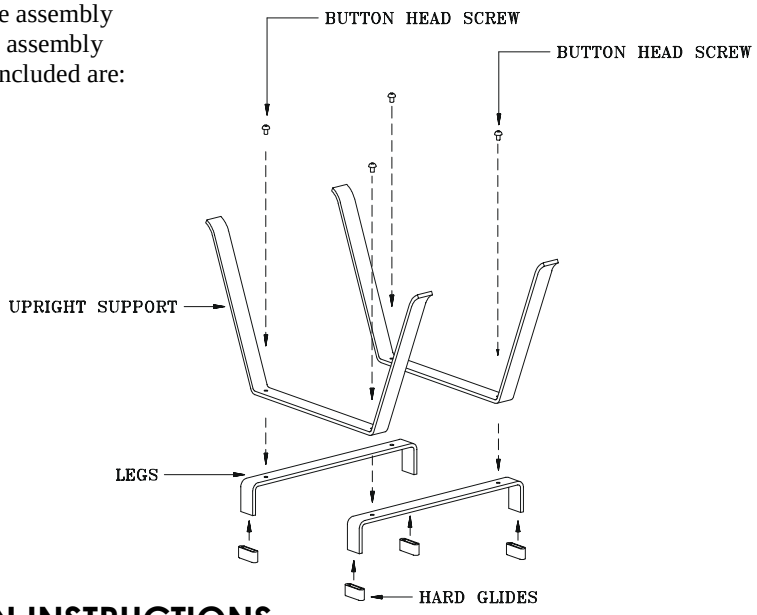

ASSEMBLY AND INSTALLATION INSTRUCTIONS

Rack Assembly

1) Slip the hard glides over the ends of the legs.
2) Place the upright supports on top of and perpendicular to the legs. Using the Allen wrench and the four 3/8” x 5/8" button head screws, attach the legs and the uprights together. The screws should be inserted from the top down toward the floor. Tighten the screws only finger tight.
3) Square - up rack and tighten all screws firmly.
4) All of our hammered steel racks are finished with an industrial wax designed to give years of protection to the rack. Cleaning is easily done with a damp cloth. Dry thoroughly after cleaning. If a touch-up is ever needed we recommend a "Pledge" like wax product.

WARNING

It is important that your rack is assembled correctly. If the unit is assembled or used incorrectly, it could become unstable and collapse, possibly causing injury.

If you need help, please call 1-877-ENCLUME
Enclume Design Products, Inc.
24 Colwell Street, Port Hadlock, WA. 98339
Phone 360-385-6100 • Fax 360-385-6156
www.enclume.com