LINON

LINON HOME DECOR PRODUCTS,INC.

ASSEMBLY INSTRUCTIONS

ANGELA CHEVAL MIRROR WALNUT

556043WAL01U

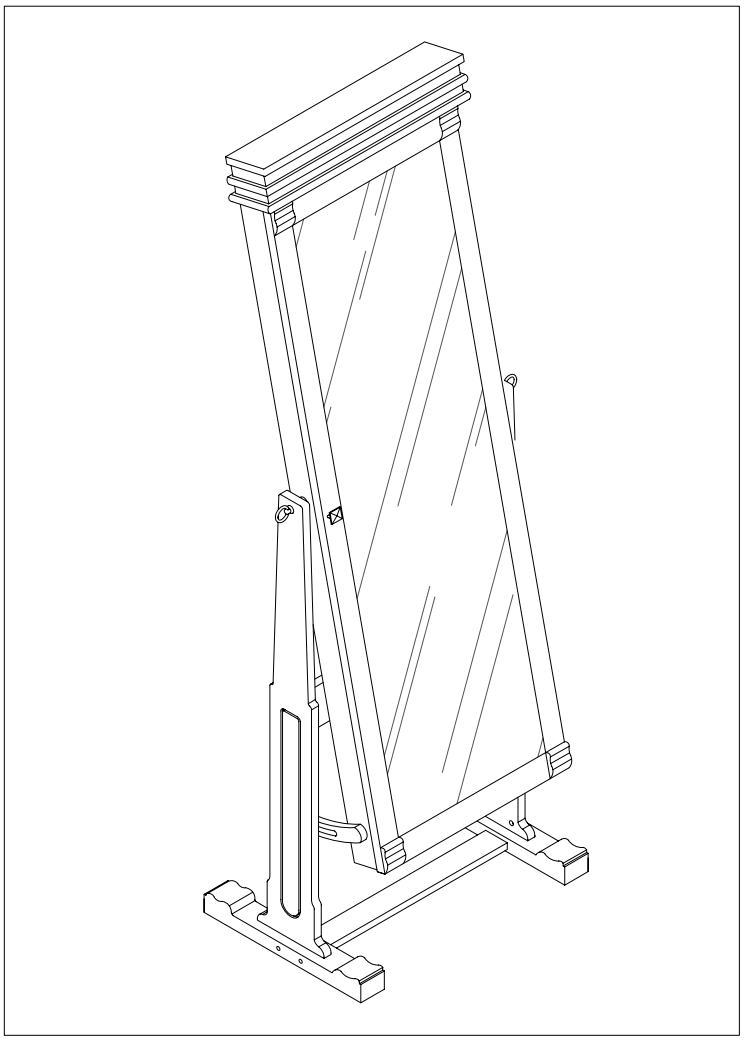

We are here to help!

We do our best to insure that your furniture arrives in excellent condition. In the event that a part is damaged or missing, Linon Home Decor will be happy to provide you with replacement parts, at no charge, within 30 days of purchase, providing the parts are available in our warehouse and the item purchased is part of our current inventory. In order to receive spare parts, at no charge, you must provide proof of purchase within 30 days.

If you need assistance with assembly or replacement parts, please call Linon Customer Service, prior to returning the item to the store.

Our office is open Monday – Friday 9AM – 5PM, Eastern Standard Time.
Our toll free customer service number is: 1-800-262-1852.
Or visit our web site www.Linon.com to order spare parts and for care instructions on your newly purchased furniture.

MADE IN CHINA

FOR LINON HOME DECOR PRODUCTS INC BY CH176

LINON

LINON HOME DECOR PRODUCTS,INC.

PARTS IDENTIFICATION

ITEM	DESCRIPTION	QTY
#1	ARMOIRE CABINET	01
#2	LEFT PANEL	01
#3	LEG	02
#4	CROSS BAR	01
#5	LEFT BLOCK	01
#6	RIGHT BLOCK	01
#7	RIGHT PANEL	01
#8	RAIL	01

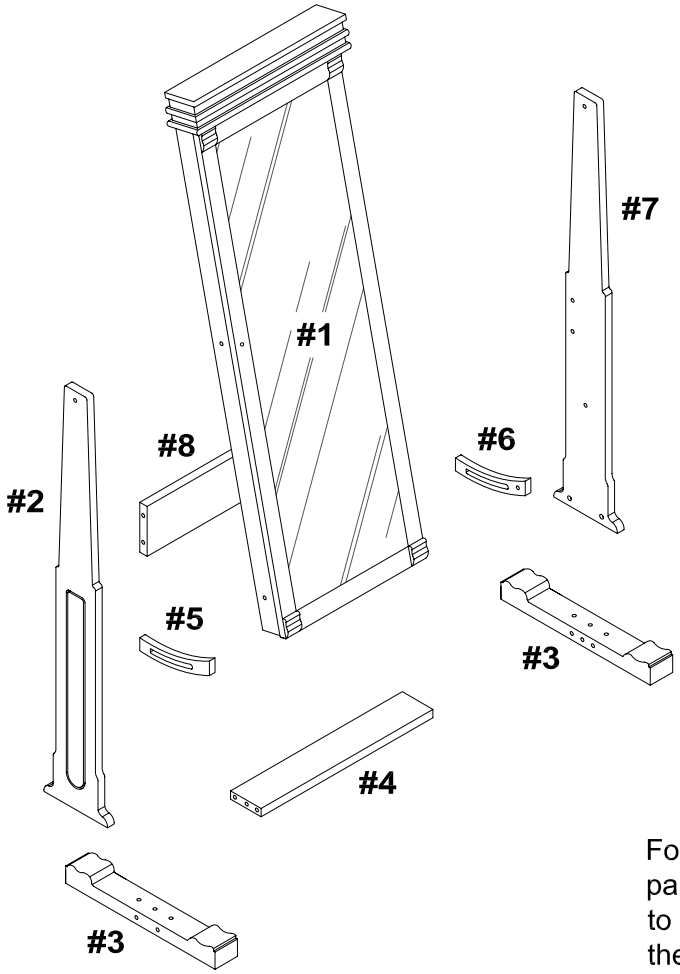

For ease of identification all parts are labeled to correspond to the Step number in which the part is used.

If any parts are missing or damaged in this package, Linon Home Decor will be happy to provide you with replacement parts, at no charge, within 30 days of purchase, providing the parts are available in our warehouse and the item purchased is part of our current inventory. In order to receive spare parts, at no charge, you must provide proof of purchase within 30 days.

Call us toll free at 1-800-262-1852. Or visit our web site www.Linon.com to order spare parts and for care instructions on your newly purchased furniture.

LINON

LINON HOME DECOR PRODUCTS,INC.

HARDWARE IDENTIFICATION

Please line up the hardware with the correct full size image to make sure you are installing the hardware correctly.

ITEM	PICTURE		DESCRIPTION	QTY
A	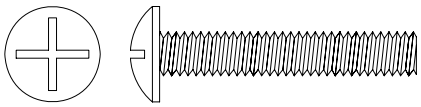	(Ø1/4"x2-1/2"L) Not to Scale	BOLT	08
B	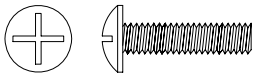	(Ø5/32"x3/4"L) Full size	BOLT	01
C	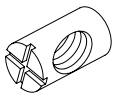	(Ø1/4") Not to Scale	NUT	08
D	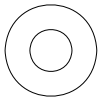	(Ø16mm) Not to Scale	FLAT WASHER	02
F	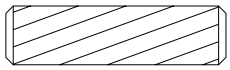	(Ø8mmx30mm) Full size	WOODEN DOWEL	04
G		Not to Scale	BLOCK	02
H	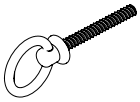	Not to Scale	BOLT	02
I	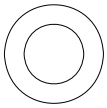	(Ø19mm) Not to Scale	FLAT WASHER	02
J		(Ø19mm) Not to Scale	HANDLE	01

If any parts are missing or damaged in this package, Linon Home Decor will be happy to provide you with replacement parts, at no charge, within 30 days of purchase, providing the parts are available in our warehouse and the item purchased is part of our current inventory. In order to receive spare parts, at no charge, you must provide proof of purchase within 30 days.

Call us toll free at 1-800-262-1852. Or visit our web site www.Linon.com to order spare parts and for care instructions on your newly purchased furniture.

LINON

LINON HOME DECOR PRODUCTS,INC.

HARDWARE IDENTIFICATION

Please line up the hardware with the correct full size image to make sure you are installing the hardware correctly.

ITEM	PICTURE		DESCRIPTION	QTY
K	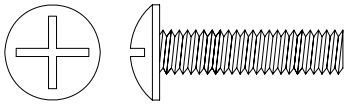	(Ø1/4"x1"L) Full size	BOLT	02
L	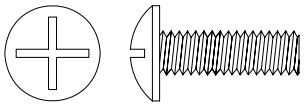	(Ø1/4"x3/4"L) Full size	BOLT	02
M		(Ø1/4") Not to Scale	CAM BOLT	04
N		Not to Scale	CAM LOCK	04
P	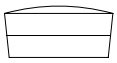	Not to Scale	WOOD HOLE COVER	04

If any parts are missing or damaged in this package, Linon Home Decor will be happy to provide you with replacement parts, at no charge, within 30 days of purchase, providing the parts are available in our warehouse and the item purchased is part of our current inventory. In order to receive spare parts, at no charge, you must provide proof of purchase within 30 days.

Call us toll free at 1-800-262-1852. Or visit our web site www.Linon.com to order spare parts and for care instructions on your newly purchased furniture.

LINON HOME DECOR PRODUCTS,INC.

STEP 1.

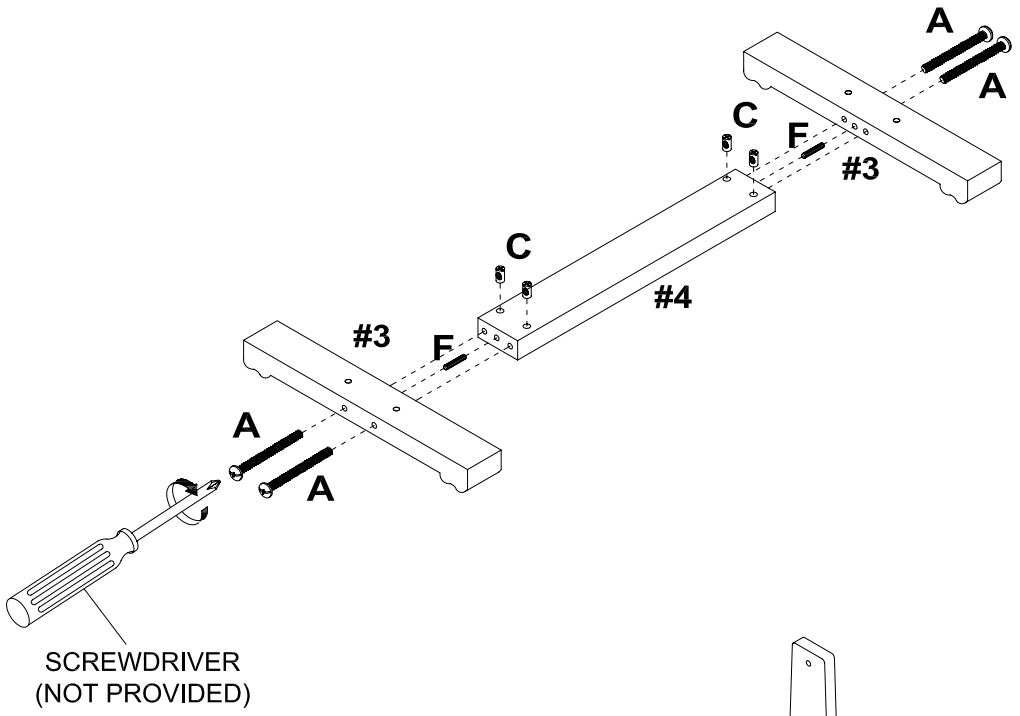

STEP 2.

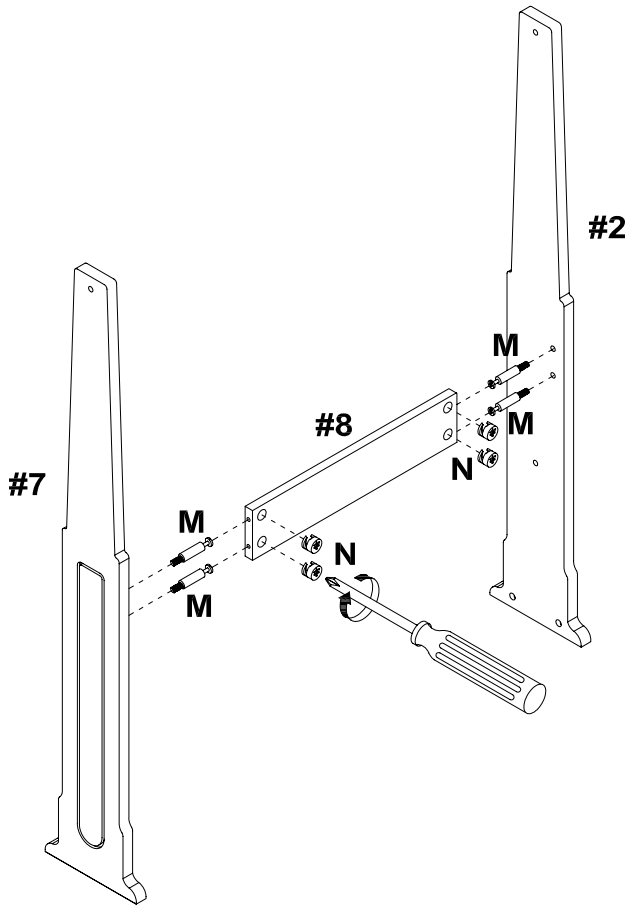

IMPORTANT:

1. DO NOT TIGHTEN BOLTS COMPLETELY UNTIL ALL BOLTS ARE COMPLETELY LINED UP AND INSERTED INTO HOLES / NUTS.
2. DO NOT OVER TIGHTEN SCREWS AND BOLTS TO AVOID STRIPPING.

LINON HOME DECOR PRODUCTS,INC.

STEP 3.

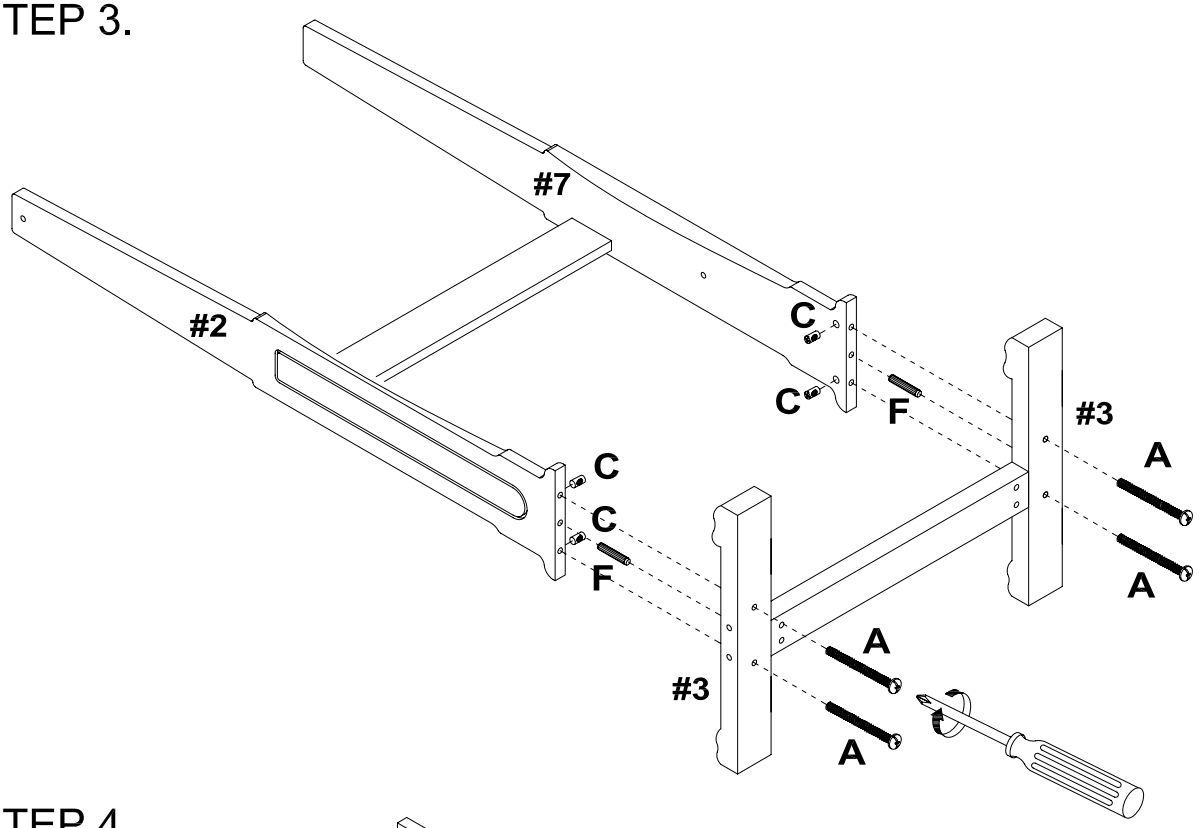

STEP 4.

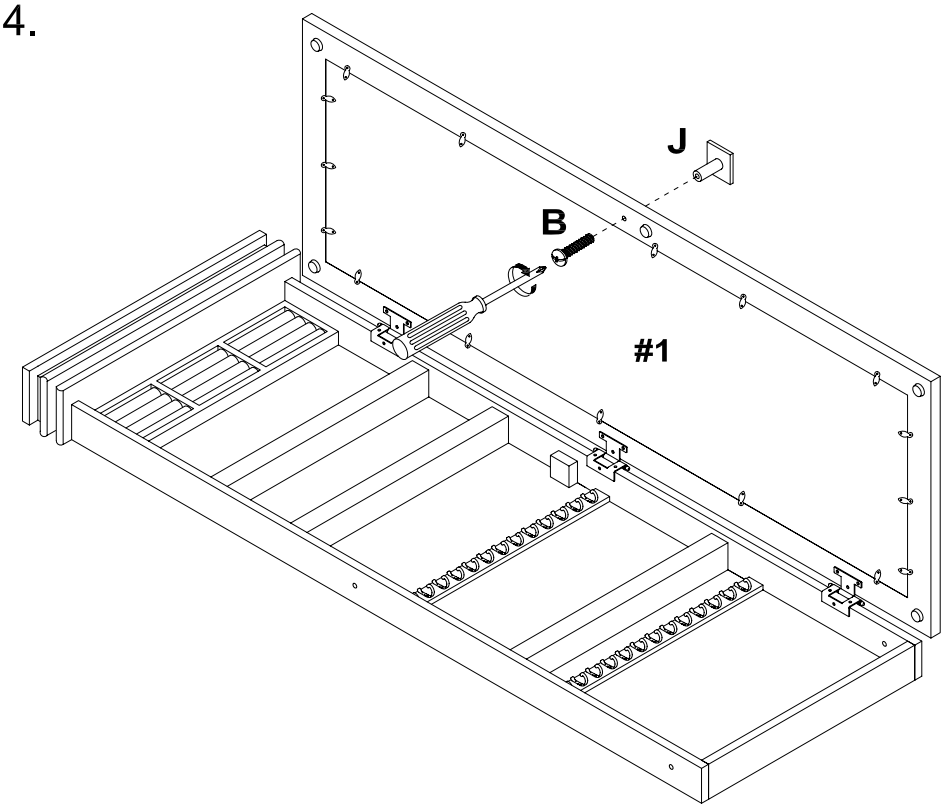

IMPORTANT:

1. DO NOT TIGHTEN BOLTS COMPLETELY UNTIL ALL BOLTS ARE COMPLETELY LINED UP AND INSERTED INTO HOLES / NUTS.
2. DO NOT OVER TIGHTEN SCREWS AND BOLTS TO AVOID STRIPPING.

LINON HOME DECOR PRODUCTS,INC.

STEP 5.

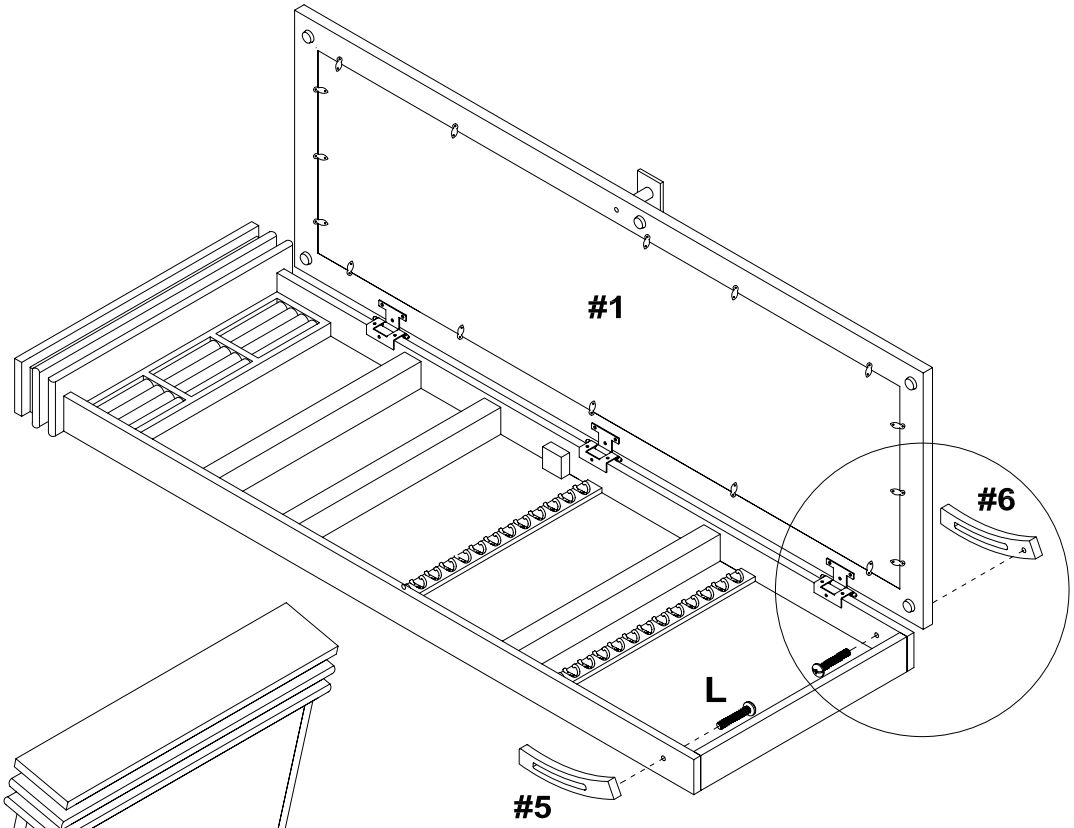

STEP 6.

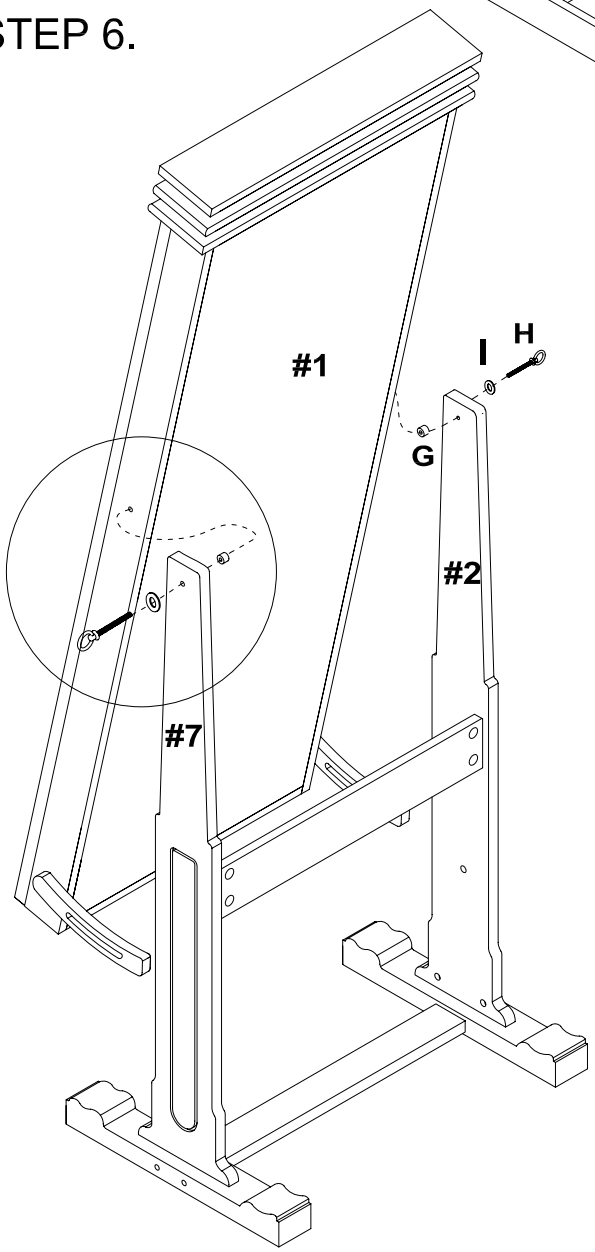

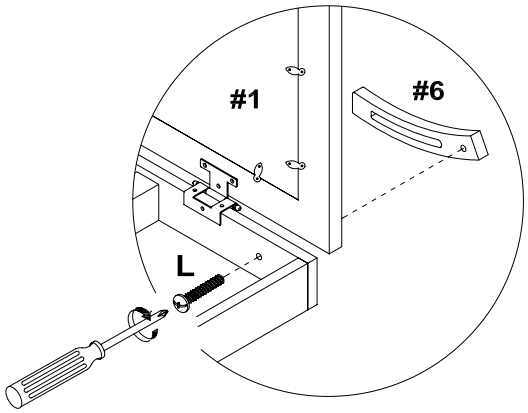

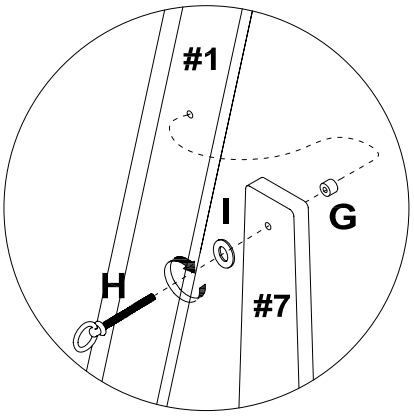

LINON HOME DECOR PRODUCTS,INC.

STEP 7.

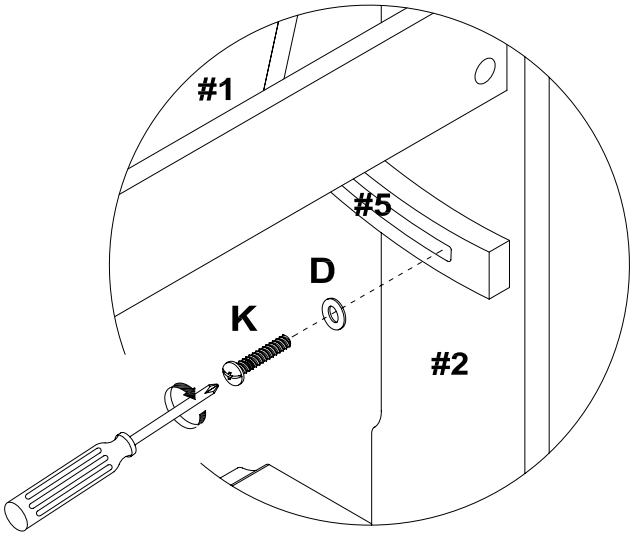

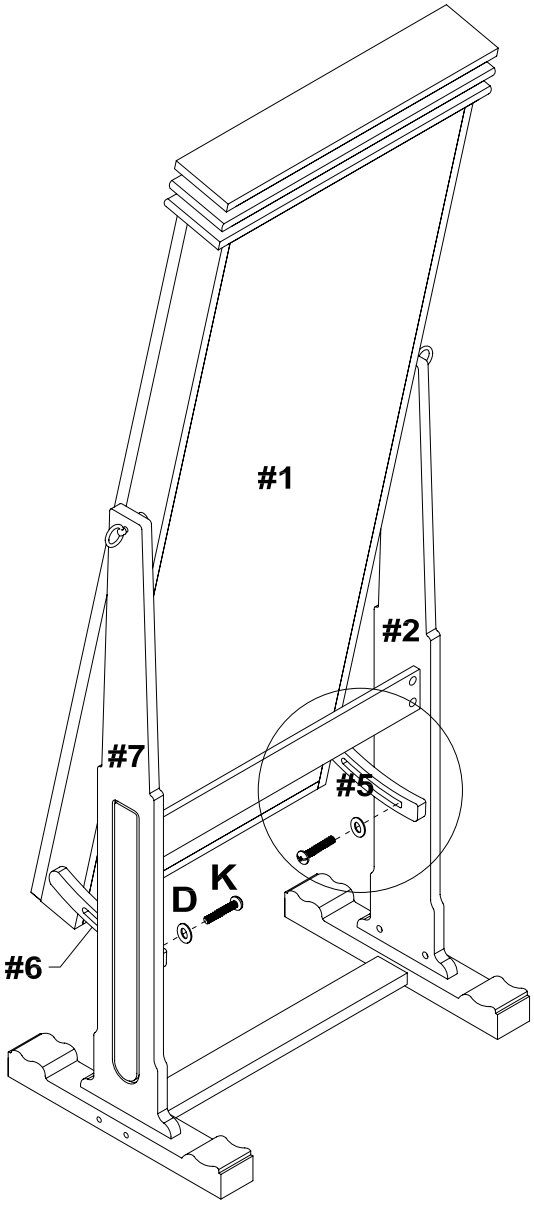

STEP 8.

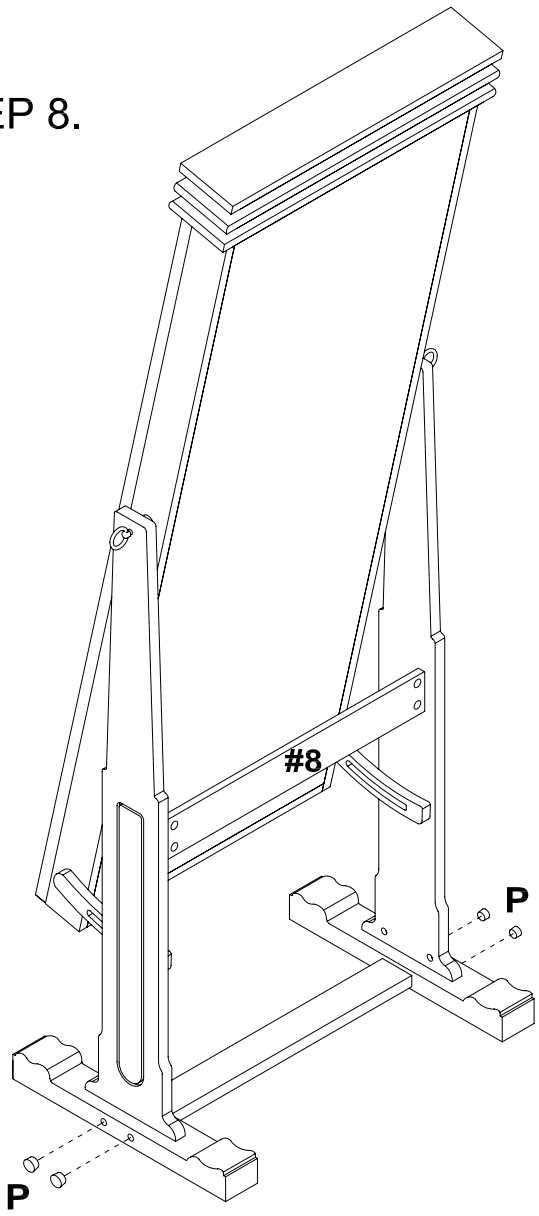

LINON

LINON HOME DECOR PRODUCTS,INC.

LIMITED 6 MONTHS WARRANTY

WHAT IS COVERED

This product is covered under our manufacturer's 6 months limited warranty (Linon Home Décor Products). To ensure your complete satisfaction, this warrants to the original purchaser that the Linon supplied item is free from defects in material and workmanship, as of the date of purchase, and that it will, under normal use and proper care, remain so for six months after the date of purchase.

Replacement of missing or initially defective parts will be sent, at no charge, for a period of 30 days from the date of purchase with valid proof of purchase providing the parts are available in our warehouse and the item purchased is part of our current inventory.

WHAT IS NOT COVERED

It remains the customer's responsibility for freight and packaging charges to and from the customer service center. Labor and material charges to remove or replace parts under this warranty are not covered.

This warranty does not cover: Furniture used for commercial purposes, failures caused by improper installation assembly or by improper care, unreasonable or abusive use , freeze damage, acts of God, rust, purchased parts or return freight and packaging charges. Proof of purchase (dated register receipt) is required for warranty claims.

HOW TO OBTAIN SERVICE

For further information, please contact our customer service department, c/o Linon Home Décor Products, Inc., between 9:00 AM and 5:00 PM Eastern Standard Time, Monday through Friday:

LINON HOME DÉCOR PRODUCTS, INC.,
CUSTOMER SERVICE DEPARTMENT

1) Email address: consumersupport@linon.com
2) Toll free number : 1 - 800 - 262 - 1852
3) Visit our web site www.Linon.com to order spare parts and for care instructions on your newly purchased furniture.