Specifications

Brenner Commercial Style Single-Handle Pull-Down Sprayer Kitchen Faucet

MODEL	SKU#	OMSID#	FINISH
HDQFP4F0005CP	1008088887	321486751	Chrome
HDQFP4F0005SS	1008088847	321486804	Stainless Steel
HDQFP4F0005BL	1008089071	321486590	Matte Black
HDQFP4F00050B	1008089126	321486571	Oil Rubbed Bronze

FEATURES

- Max Flow Rate: 1.75gpm(6.6L/min) at 60 psi
- Max Countertop Thickness: 2 15/16"
- Spout Reach: 8 7/8"
- Spout Height: 7 7/8"
- Drip-Free Ceramic Cartridge
- Metal Lever Handle

CODE COMPLIANCE

- IAPMO Certified: ASME A112.18.1M/A112.18.1
- IAPMO Certified: Compliant to NSF/ANSI (61 Section 9, 372)
- IAPMO Green
- Meets AB 1953 Lead Standard
- ADA Compliant

GREEN UPC Water Efficiency NSF/ANSI/CAN 372 NSF/ANSI/CAN 61-9:Q ≤ 1

WARRANTY

- Limited Lifetime Warranty

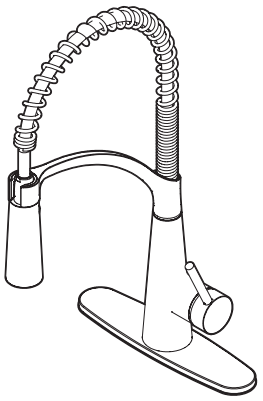

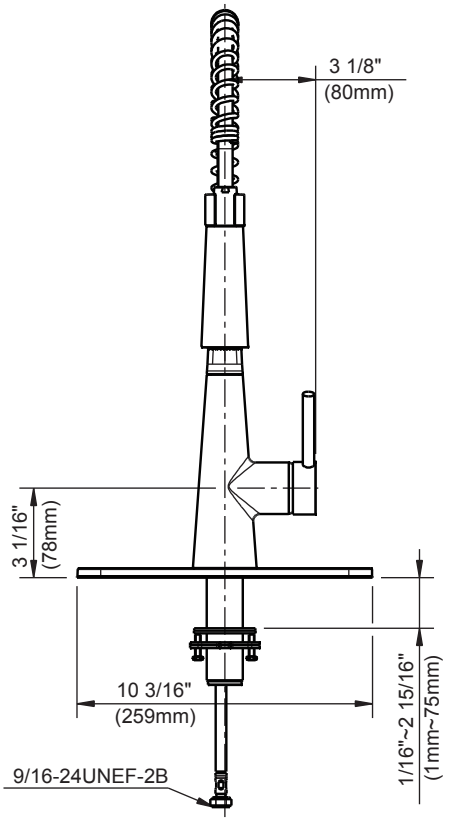

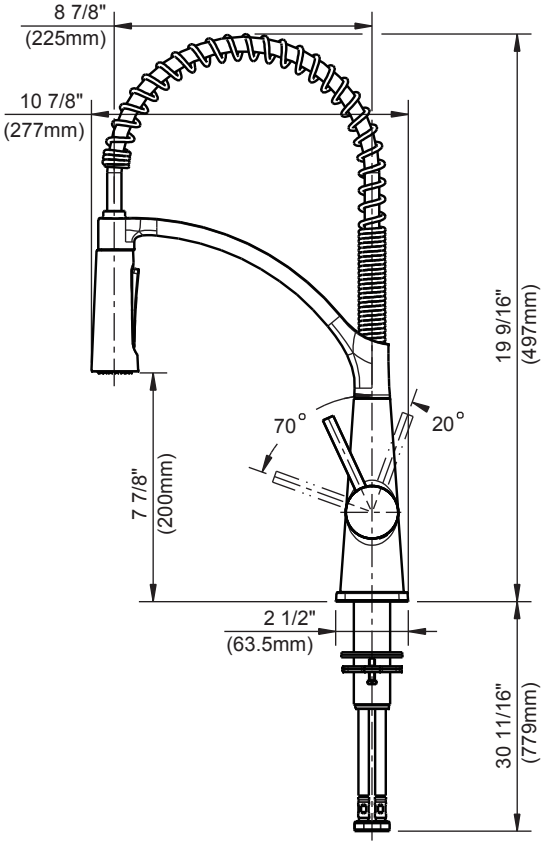

INSTALLATION DIMENSIONS