ASSEMBLY INSTRUCTIONS

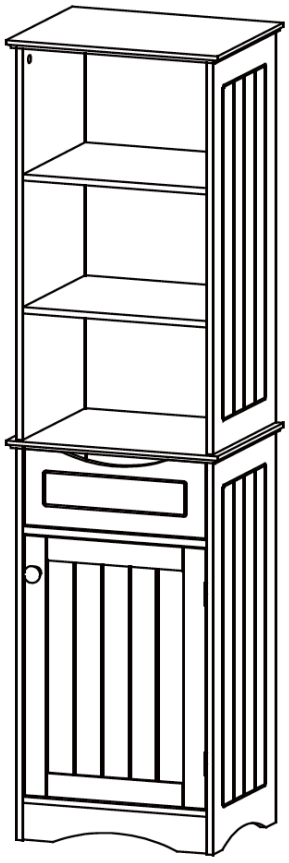

RiverRidge® Ashland Tall Cabinet

ITEM#: 06-082	White
ITEM#: 06-083	Gray
ITEM#: 06-124	Espresso

ADULT ASSEMBLY REQUIRED

This product requires assembly by an adult because of small parts. Care should be taken in unpacking and assembling this item to keep small parts away from children. During assembly children should be kept away from the product due to possible risk of injury.

WARNING ⚠ SEE FULL WARNING ON PAGE 2

Young children can be seriously injured or killed if furniture tips over. Don't use this item for a TV stand or place heavy objects on top of item. Always use angle-braces or anchors to secure furniture to the wall.

THIS CABINET WILL HOLD UP TO 20 POUNDS PER SHELF AND 10 POUNDS PER DRAWER OR A TOTAL OF 130 POUNDS. DO NOT LOAD EACH SHELF WITH MORE THAN 20 POUNDS OR THE DRAWER WITH MORE THAN 10 POUNDS. OVERLOADING THE CABINET MAY CAUSE DAMAGE TO THE CABINET OR CAUSE SERIOUS INJURY OR DEATH.



WARNING

SERIOUS OR FATAL INJURIES CAN OCCUR FROM FURNITURE TIP-OVER. TO HELP PREVENT TIP-OVER:

- **Always use tip over restraints and/or wall anchors to secure furniture to the wall**
- **Place heaviest items in the lowest drawers/bins or shelves**
- **Do not set TV's or other heavy objects on the top of this product**
- **Never allow children to climb or hang on to the drawers/bins, doors or shelves of furniture**
- **Never open more than one drawer at a time or defeat or remove any drawer interlock system**

PARTS LIST

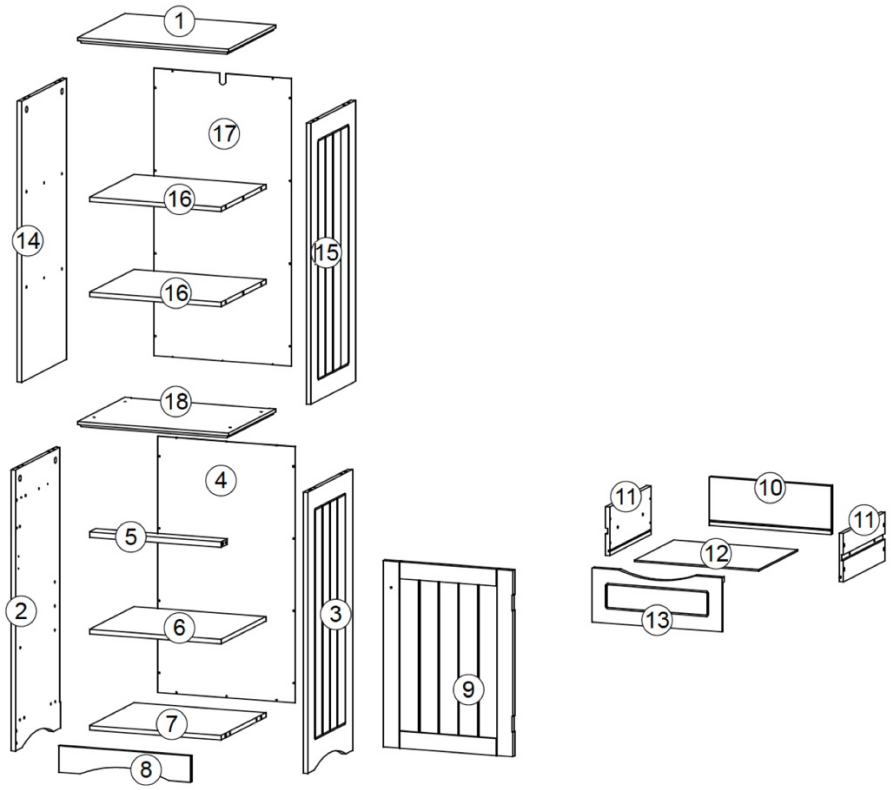

NO	QTY	DESCRIPTION
1	1PC	Top Board
2	1PC	Lower Left Side Panel
3	1PC	Lower Right Side Panel
4	1PC	Lower Back Panel
5	1PC	Upper Cross Bar
6	1PC	Adjustable Shelf
7	1PC	Bottom Board
8	1PC	Decorative Panel
9	1PC	Door
10	1PC	Drawer Back Board
11	2PCS	Drawer Side Panel
12	1PC	Drawer Bottom Board
13	1PC	Drawer Front Board
14	1PC	Upper Left Side Panel
15	1PC	Upper Right Side Panel
16	2PCS	Fixed Shelf
17	1PC	Upper Back Panel
18	1PC	Middle Connection Board

NO	PARTS	QTY	DESCRIPTION
A	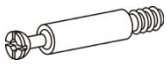	18PCS	Cam Bolt
B		18PCS	Cam Lock
C		26PCS	Wood Dowel
D		14PCS	Screw (3x10mm)
E		2PCS	Drawer Holder
F	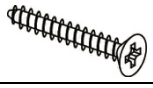	8PCS	Screw (3.5x25mm)
G		24PCS	Screw (2.5x12mm)
H		2PCS	Drawer Plastic Stopper
I		2PCS	Metal Hinge
J		1PC	Knob
K		1PC	Machine Screw (4x18mm)
L		1PC	Magnet Plate
M		1PC	Magnet
N		2PCS	Screw (3x14mm)
O	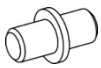	4PCS	Shelf Holder
P	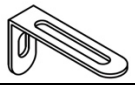	1PC	Adjustable Anchor Bracket
Q		1PC	Screw (4x10mm)
R		1PC	Plastic Anchor
S	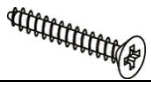	1PC	Screw (4x30mm)
U		4PCS	Screw (4x40mm)

TOOLS NEEDED FOR ASSEMBLY: FLAT & PHILLIPS SCREWDRIVER (NOT INCLUDED)
THE USE OF A POWER SCREWDRIVER IS NOT RECOMMENDED FOR ASSEMBLY
DO NOT USE ITEM IF ANY PARTS ARE MISSING OR DAMAGED

To order replacement parts at no cost to you, email customer.service@ssi-rr.com, call 1-(844)-223-5201 or order parts online at www.riverridgehome.com. Only valid in the United States. If purchased outside of the United States, please contact retailer where purchased.

STEP 1

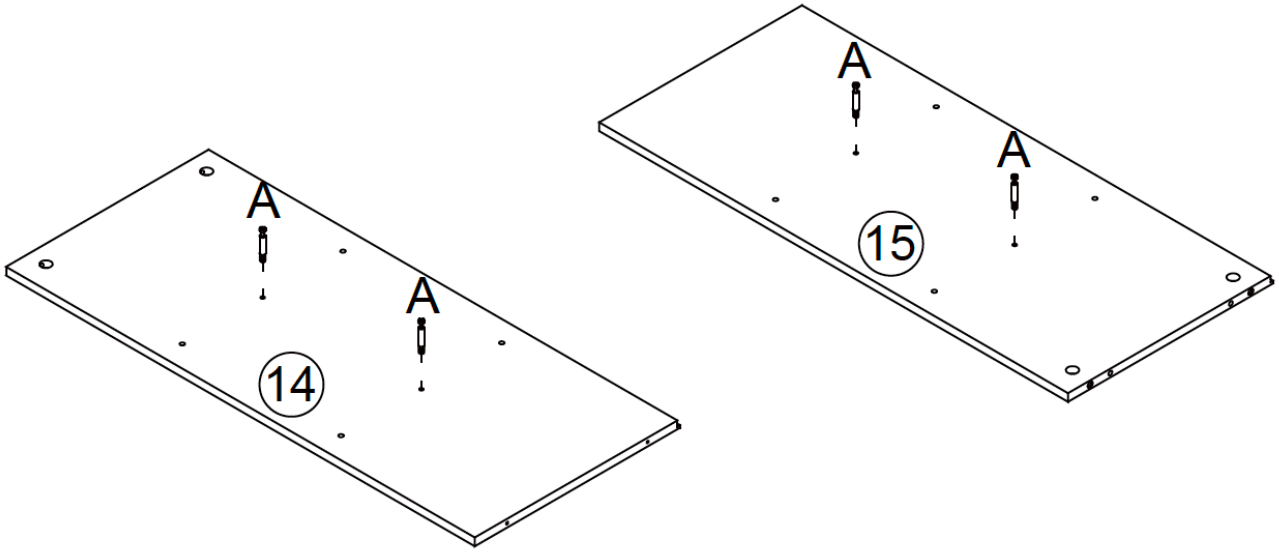

1. Screw 2 cam bolts (A) in cam bolt holes on upper left side panel (14).
2. Screw 2 cam bolts (A) in cam bolt holes on upper right side panel (15).

STEP 2

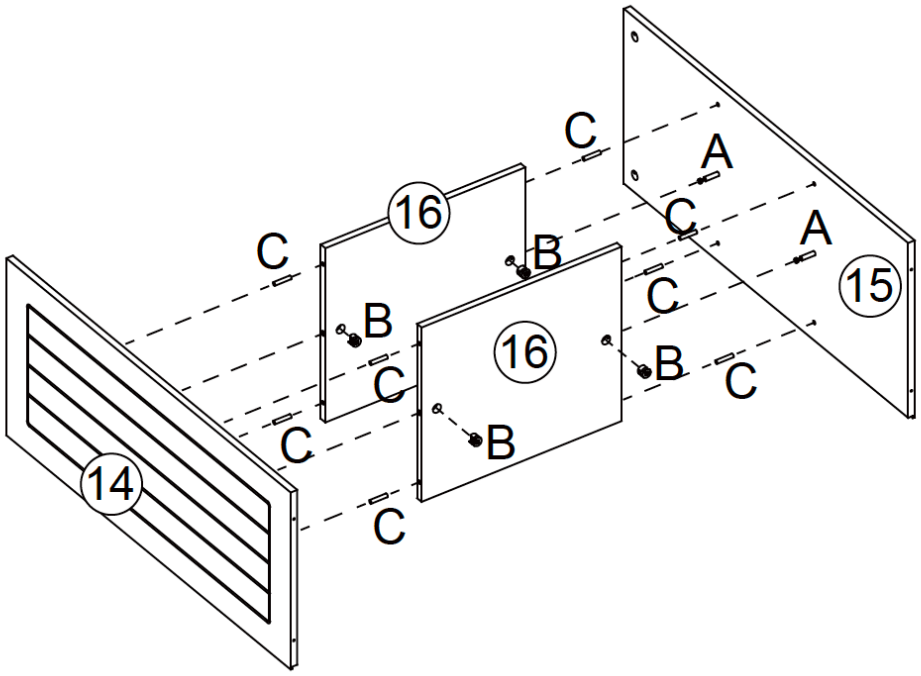

1. Insert 8 wood dowels (C) into wood dowel holes on upper left side panel (14) and upper right side panel (15).
2. Attach upper right side panel (15) to fixed shelf (16) by inserting cam bolts (A) into cam lock holes on end of open shelf (16) and inserting wood dowels (C) into wood dowel holes on fixed shelf (16).
3. Insert 2 cam locks (B) into cam lock holes on end of fixed shelf (16), rotate clockwise to secure cam bolts (A) in place.
4. Repeat above steps to assemble upper left side panel (14) to fixed shelf (16).

STEP 3

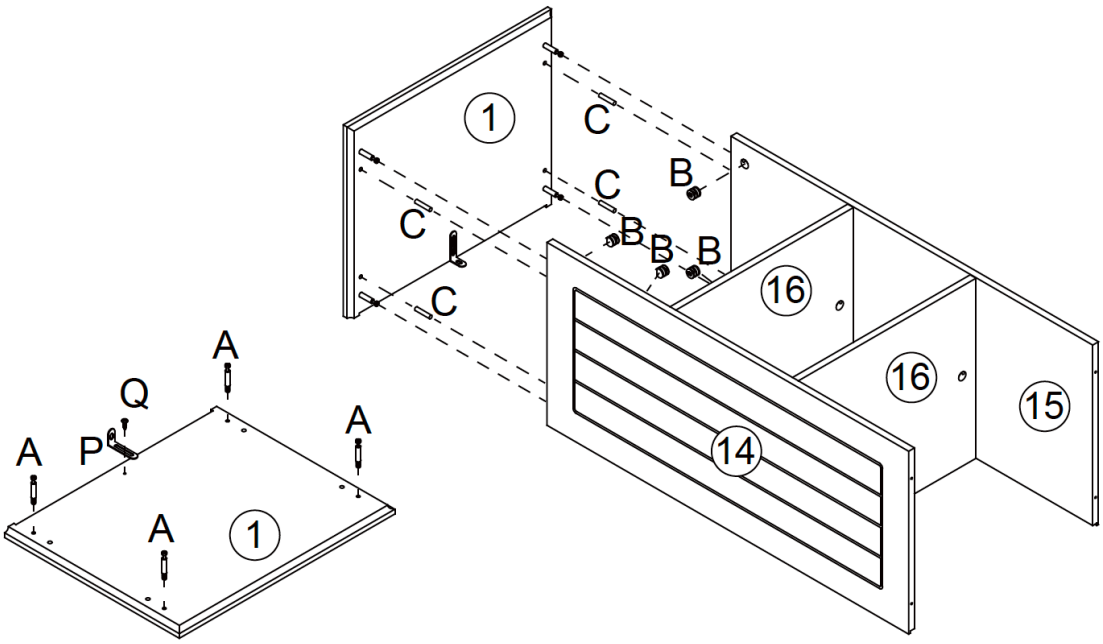

1. Insert 1 screw (Q) through hole on adjustable anchor bracket (P), then tighten to top board (1).
2. Screw 4 cam bolts (A) into cam bolt holes on top board (1).
3. Insert 4 wood dowels (C) into wood dowel holes on top board (1).
4. Attach top board (1) to upper left side panel (14) and upper right side panel (15) by inserting cam bolts (A) into cam lock holes and inserting wood dowels (C) into wood dowel holes on end of upper left side panel (14) and upper right side panel (15).
5. Insert 4 cam locks (B) into cam lock holes on upper left side panel (14) and upper right side panel (15), rotate clockwise to secure cam bolts (A) in place.

STEP 4

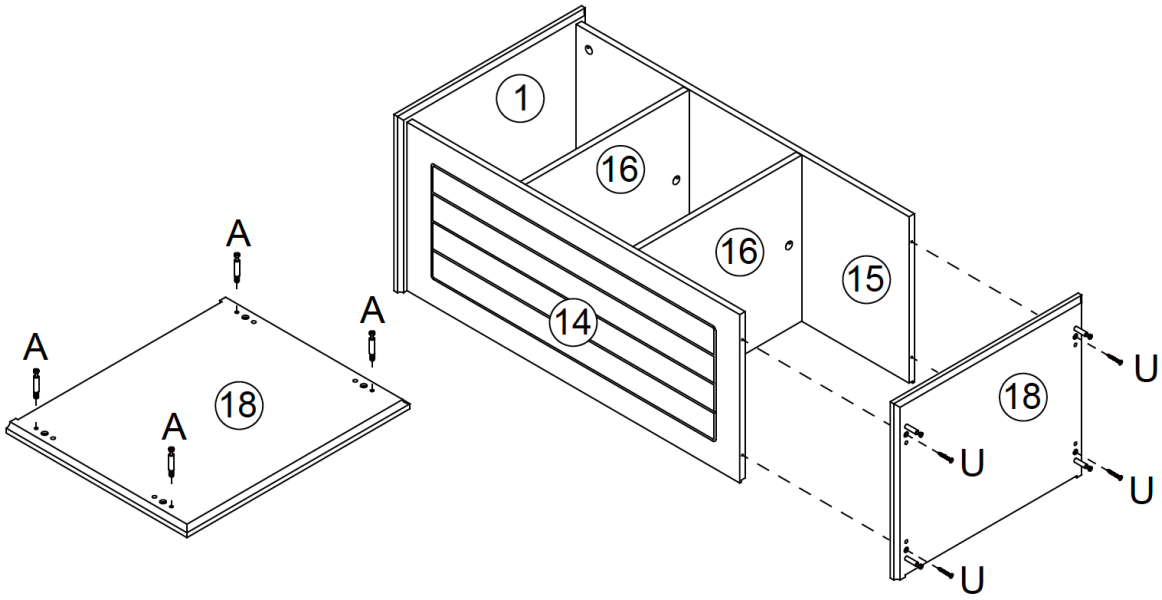

1. Screw 4 cam bolts (A) into cam bolt holes on middle connection board (18).
2. Attach middle connection board (18) to upper left side panel (14) and upper right side panel (15) by inserting 4 screws (U) through holes on middle connection board (18) and tighten to upper left side panel (14) and upper right side panel (15).

STEP 5

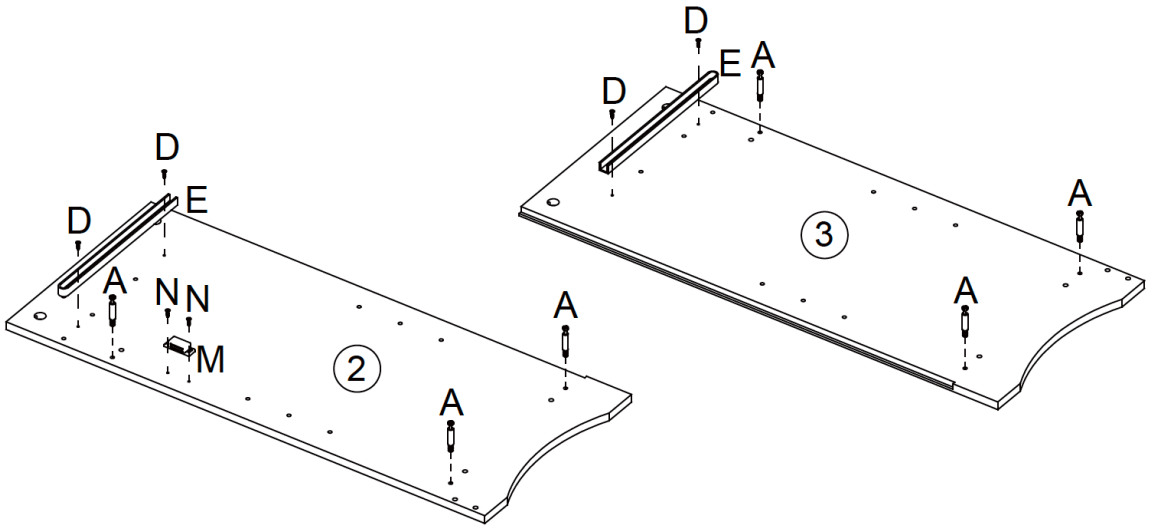

1. Screw 3 cam bolts (A) into cam bolt holes on lower left side panel (2).
2. Attach drawer holder (E) to lower left side panel (2) by inserting 2 screws (D) through holes on drawer holder (E) then tighten to lower left side panel (2).
3. Attach magnet (M) to lower left side panel (2) by inserting 2 screws (N) through holes on magnet (M), then tighten to lower left side panel (2).
4. Screw 3 cam bolts (A) into cam bolt holes on lower right side panel (3).
5. Attach drawer holder (E) to lower right side panel (3) by inserting 2 screws (D) through holes on the drawer holder (E) then tighten to lower right side panel (3).

STEP 6

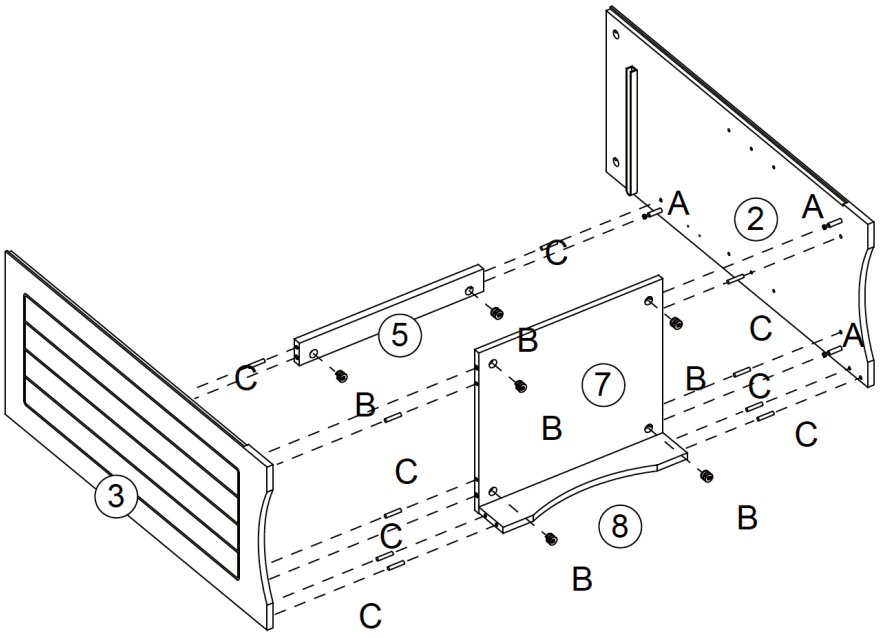

1. Insert 10 wood dowels (C) into wood dowel holes on lower left and right side panels (2) and (3).
2. Attach lower left side panel (2) to upper cross bar (5), bottom board (7) and decorative panel (8) by inserting cam bolts (A) into cam lock holes and inserting wood dowels (C) into wood dowel holes on end of upper cross bar (5), bottom board (7) and decorative panel (8).
3. Insert 3 cam locks (B) into cam lock holes on upper cross bar (5) and bottom board (7), rotate clockwise to secure the cam bolts (A) in place.
4. Repeat above steps to assemble lower right side panel (3) to upper cross bar (5), bottom board (7) and decorative panel (8).

STEP 7

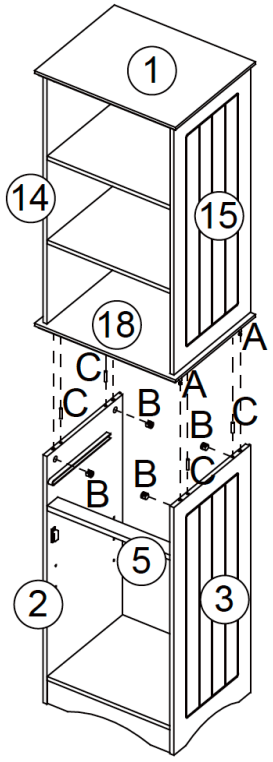

1. Insert 4 wood dowels (C) into wood dowel holes on middle connection board (18).
2. Attach upper pre-assembled unit to lower pre-assembled unit by inserting wood dowels (C) into wood dowel holes and inserting cam bolts (A) into cam lock holes on end of lower side panels (2) and (3).
3. Insert 4 cam locks (B) into cam lock holes on lower side panels (2) and (3), rotate clockwise to secure cam bolts (A) in place.

STEP 8

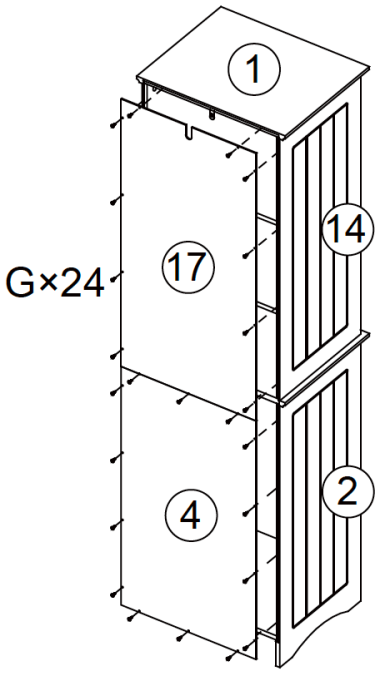

1. Attach upper back panel (17) and lower back panel (4) to back of cabinet by inserting 24 screws (G) through holes on upper back panel (17) and lower back panel (4) then tighten to back of cabinet.

STEP 9

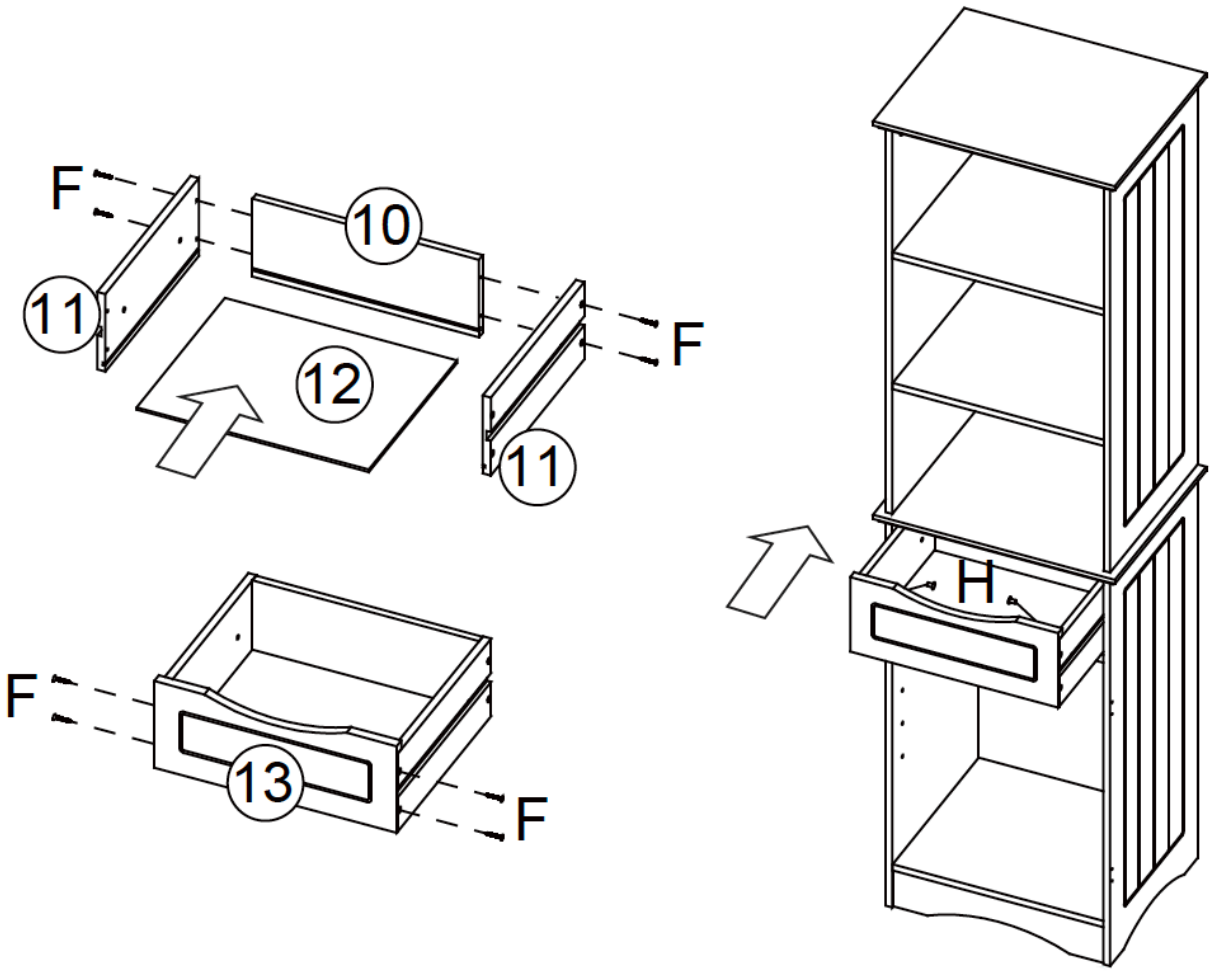

1. Attach 1 drawer side panel (11) to drawer back board (10) by inserting 2 screws (F) through holes on drawer side panel (11), then tighten to drawer back board (10).
2. Repeat above step to assemble another drawer side panel (11) to drawer back board (10).
3. Slide drawer bottom board (12) into grooves on both drawer side panels (11).
4. Attach drawer front board (13) to drawer side panels (11) and drawer bottom board (12) by inserting drawer bottom board (12) into groove on drawer front board (13), then inserting 4 screws (F) through holes on drawer side panels (11) and tighten to drawer front board (13).
5. Slide drawer into pre-assembled drawer holders.
6. Insert 2 drawer plastic stoppers (H) to prevent drawer from pulling out.

STEP 10

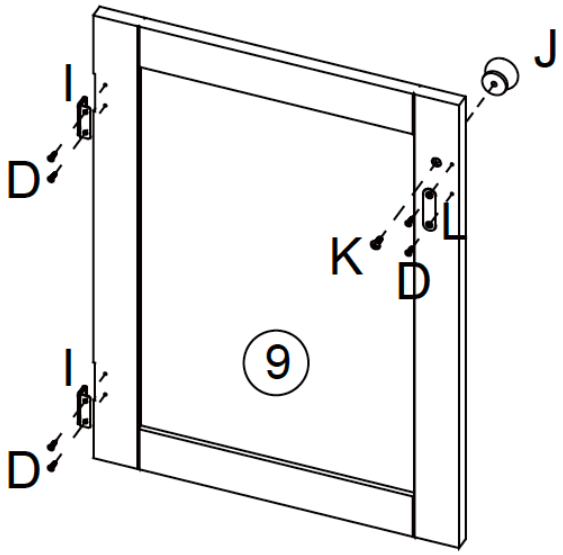

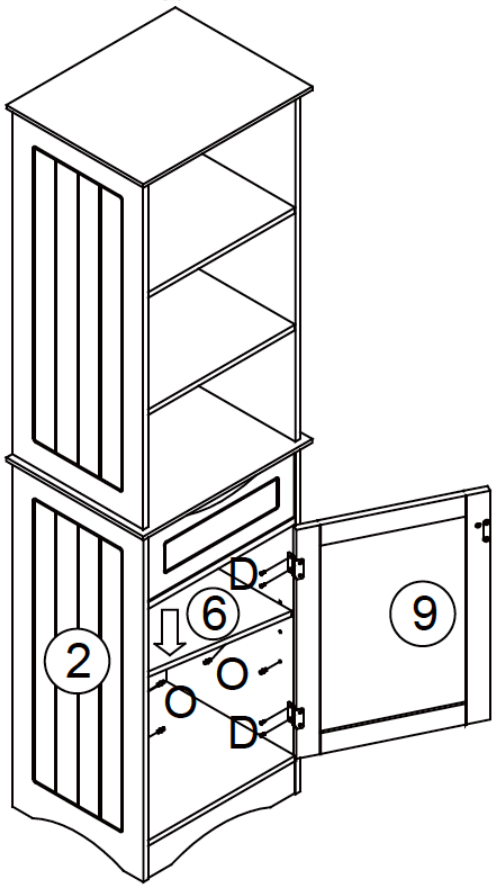

1. Attach magnet plate (L) to door (9) by inserting 2 screws (D) through holes on magnet plate (L), then tighten to door (9).
2. Attach 2 metal hinges (I) to door (9) by inserting 4 screws (D) through holes on metal hinges (I), then tighten to door (9).
3. Attach knob (J) to door (9) by inserting 1 machine screw (K) through hole on door (9), then tighten to knob (J).
4. Attach metal hinges (I) to lower right side panel (3) by inserting 4 screws (D) through holes on metal hinges (I), then tighten to lower right side panel (3).
5. Insert 4 shelf holders (O) into holes on lower left side panel (2) and lower right side panel (3) at desired shelf height.
6. Place adjustable shelf (6) onto shelf holders (O).

STEP 11

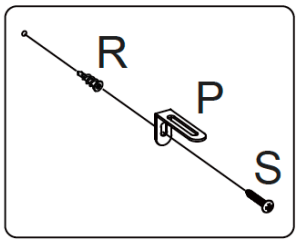

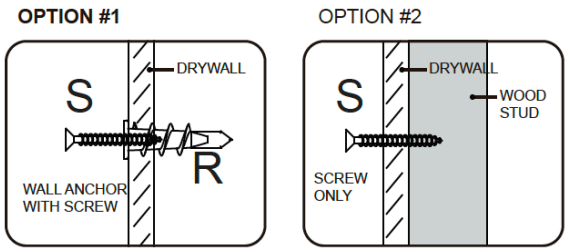

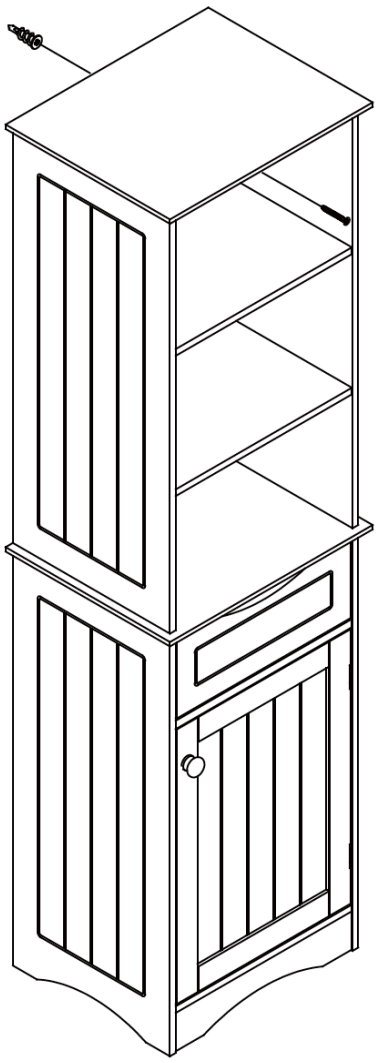

Option #1: Securing to Drywall

1. Position cabinet against wall in desired location. Using a pencil, make small mark on wall through hole on bracket (P). Move cabinet away from wall and screw 1 plastic anchor (R) into wall on pencil mark.
2. Place cabinet against wall, insert 1 screw (S) through hole on brackets (P), then tighten to plastic anchor (R).

Option #2: Securing to Drywall and Wood Stud

1. Position cabinet against wall in desired location. Insert 1 screw (S) through hole on bracket (P), then tighten through drywall and into wood stud.

*Tip: Anchor bracket (P) can be adjusted to correct distance from wall to cabinet as needed. Once adjusted, be sure to re-tighten bracket inside cabinet for stability.

ATTENTION ADULTS: Cabinet should be checked periodically for damage or loose screws/parts. Take appropriate action necessary to correct hazards such as tightening of screws and taking any damaged parts away from children.

WARNING ⚠ Please make sure your item is secured to the wall, per assembly instructions.

CARE INSTRUCTIONS:

Wipe clean with a water dampened cloth. Wipe dry with clean cloth.

IMPORTANT:
Keep assembly instructions for future reference.

Enjoy your new RiverRidge® Cabinet!

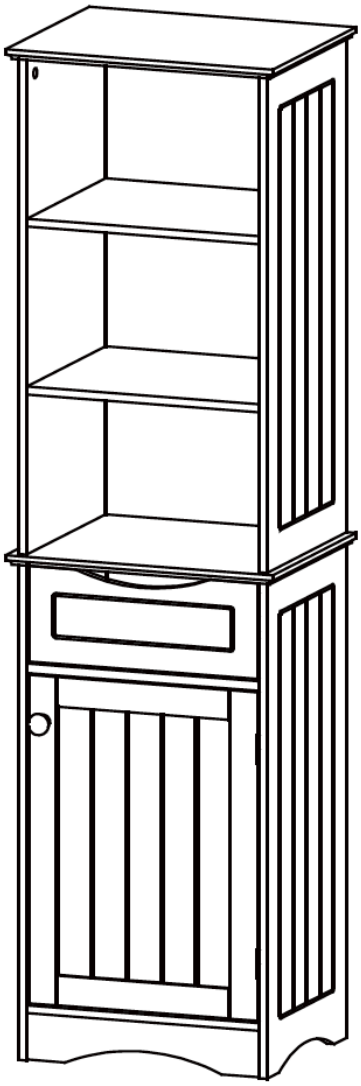

Thank you for purchasing this RiverRidge® Home item. We hope you enjoy it and consider purchasing other RiverRidge® items.

To order replacement parts at no cost to you, email customer.service@ssi-rr.com, call 1-(844)-223-5201 or order parts online at www.riverridgehome.com. Only valid in the United States. If purchased outside of the United States, please contact retailer where purchased.

RiverRidge® is a registered trademark of Sourcing Solutions, Inc., Hudson, WI 54016