Commercial Electric™

Item # XXXXXX
Model # SFC-225BR-1

USE AND CARE GUIDE

9 IN. FLOOR FAN

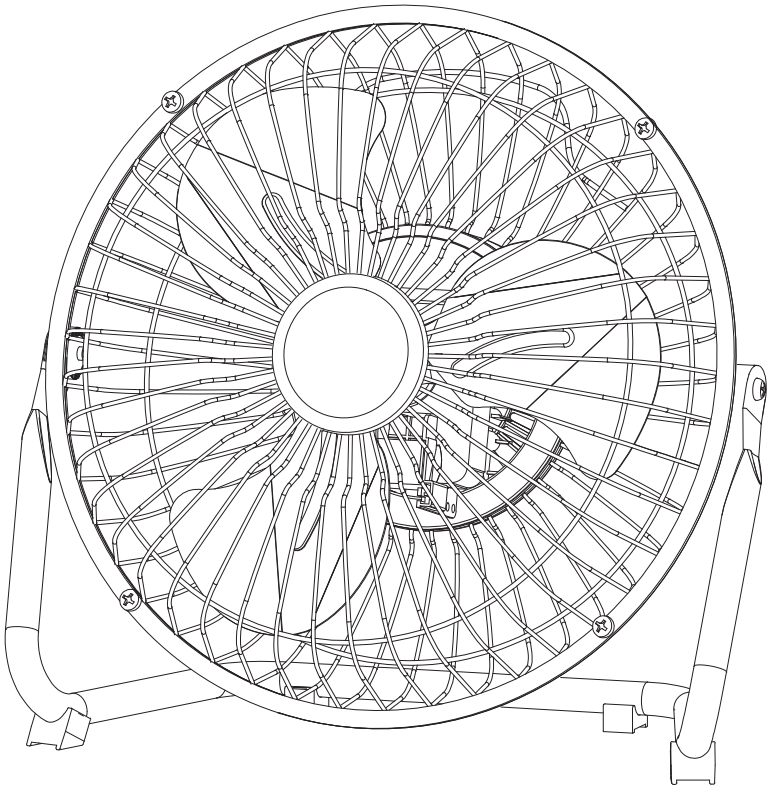

Questions, problems, missing parts? Before returning to the store,
call Commercial Electric Customer Service
8 a.m. - 7 p.m., EST, Monday - Friday, 9 a.m. - 6 p.m., EST, Saturday

1-877-527-0313

HOMEDEPOT.COM

THANK YOU

We appreciate the trust and confidence you have placed in Commercial Electric through the purchase of this fan. We strive to continually create quality products designed to enhance your home. Visit us online to see our full line of products available for your home improvement needs. Thank you for choosing Commercial Electric!

Table of Contents

Table of Contents 2
Safety Information 2
Warranty 3
Pre-assembly 3
Package Contents 3
Assembly 4
Operation 5
Maintenance 5
Care and Cleaning 6

Safety Information

READ AND SAVE THESE INSTRUCTIONS.



WARNING: Unplug the fan before moving it or performing maintenance. Do not touch the fan when your hands are wet.



WARNING: Those who are not qualified electricians should not disassemble, repair, or rebuild the fan.



WARNING: Unplug the fan when it is not in use.



WARNING: DO NOT unplug the fan by holding the cable cord. Unplug by holding the plug.



WARNING: DO NOT use the fan when there is damage to the cable cord or plug.



WARNING: DO NOT use the fan with an extension cord.



WARNING: DO NOT insert your hand or other objects into the guard or the movable parts.



WARNING: To reduce the risk of fire or electric shock, do not use this fan with any solid-state speed control device.



WARNING: DO NOT use the fan close to a fire.



WARNING: To reduce the risk of fire, electric shock or injury to persons, do not use replacement parts that have not been recommended by the manufacturer (e.g. parts made at home using a 3D printer).



WARNING: If the supply cord is damaged, it has to be replaced by the manufacturer, its service agent or similarly qualified persons in order to avoid a hazard.



WARNING: DO NOT use this fan outdoors.



CAUTION: DO NOT immerse the fan in water.



CAUTION: If you have removed the guard for cleaning, fit the guard back onto the fan before starting up the fan.



CAUTION: This fan is not intended for use by people (including children) with reduced physical, sensory or mental capabilities or lack of experience and knowledge unless they have been given supervision or instruction concerning use of the fan by a person responsible for their safety. Supervise children to ensure they do not play with the fan.



CAUTION: This product employs overload protection (fuse). A blown fuse indicates an overload or short-circuit situation. If the fuse blows, unplug the product from the outlet. Replace the fuse as per the user servicing instructions (follow product marking for proper fuse rating) and check the product. If the replacement fuse blows, a short-circuit may be present and the product should be discarded or returned to an authorized service facility for examination and/or repair.



CAUTION: This appliance has a polarized plug (one blade is wider than the other). To reduce the risk of electric shock, this plug is intended to fit in a polarized outlet only one way. If the plug does not fit fully in the outlet, reverse the plug. If it still does not fit, contact a qualified electrician. Do not attempt to defeat this safety feature.

Warranty

The manufacturer warrants this product to be free from manufacturing defects in the material and workmanship under normal use for a period of two years after the date of purchase by the original purchaser.

This warranty does not cover transit damages. This warranty does not apply to damages from accident, misuse, alteration of any kind to the fan or where the connected voltage is more than above the nameplate voltage. This warranty does not apply to the finish on any portion of the product. Servicing performed by unauthorized persons shall render the warranty invalid.

The warranty is not responsible for damages of any kind, including accident and consequential damages. Some states do not allow the exclusion or limitation of the incidental or consequential damages, so the above exclusion or limitation may not apply to you. This warranty gives you specific legal rights, and you may also have other rights which vary from state to state.

For additional questions regarding warranty, contact the Customer Service Team at 1-877-527-0313 or visit www.HomeDepot.com.

Pre-assembly

PACKAGE CONTENTS

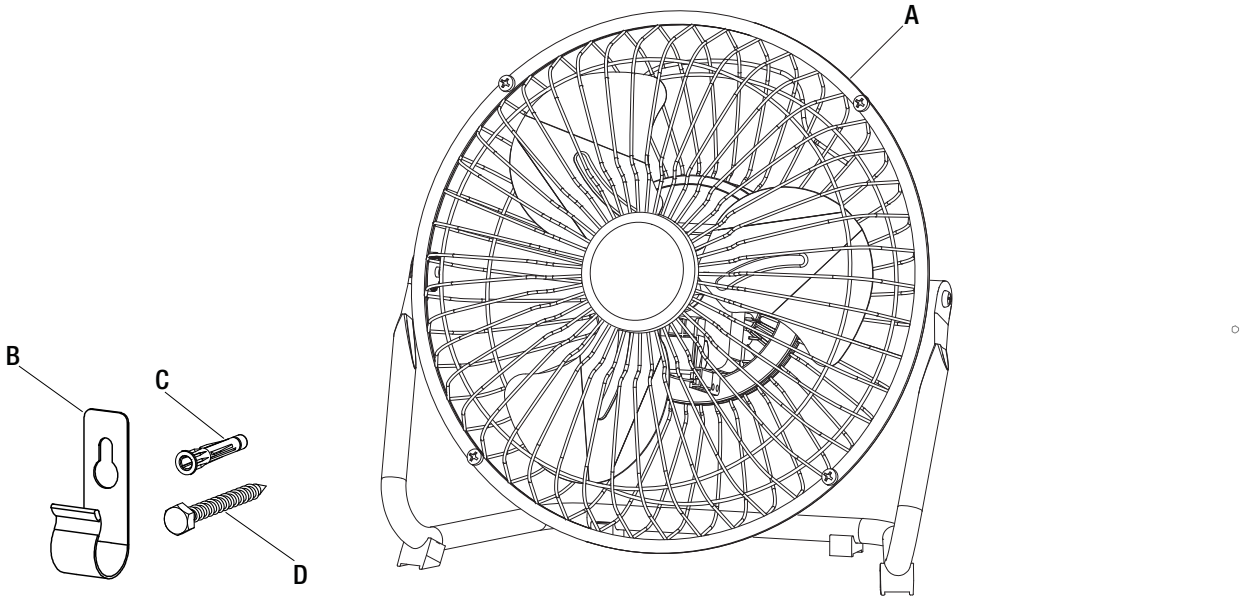

Part	Description	Quantity
A	Fan	1
B	Wall mounting bracket	1
C	Wall anchor	1
D	Bolt	1

Assembly

1 This fan is shipped fully assembled.

2 (Optional) Mounting the fan to a wall

WARNING: Ensure the front and rear guard screws are completely screwed down in the locked position before operation.

WARNING: To reduce the risk of electric shock and personal injury, ensure the location for all mounting is able to support this fan.

WARNING: This fan is recommended to be mounted by a qualified electrician.

□ Mark the hole locations and then drill the holes.

□ For wood wall, position the wall mounting bracket (B) and then screw the bolt (D) into the wall and make it fastened. (See fig. A1)

□ For concrete wall, insert the wall anchor (C) and tap it flush with the wall, position the wall mounting bracket (B) and then screw the bolt (D) into the wall anchor (C) and make it fastened. (See fig. B2)

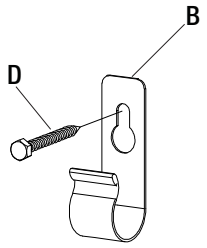

fig. A1: For wood wall

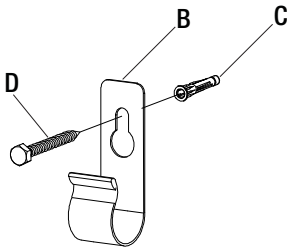

fig. A2: For concrete wall

□ Hang the fan (A) on the wall mounting bracket (B).

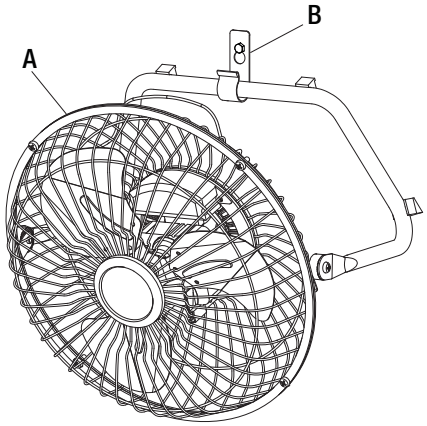

Operation

1 Turning the fan On/Off and adjusting the airflow settings

- □ Plug the power cord into an outlet.
- □ Turn the switch to the desired speed. The settings are
  0 = off, III = High, II = Medium, I = Low.

POWER CORD

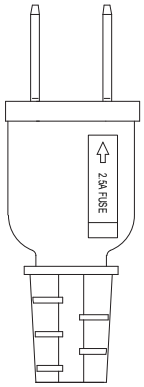

SWITCH

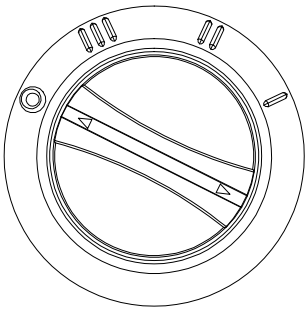

Maintenance

- □ The plug is a safety feature that contains a safety device (fuse). If your replaceable fuse (2.5 Amp) blows, follow these instructions to replace the fuse.
  - □ Unplug your fan, grasp the plug and remove from the receptacle or other outlet device. Do not unplug by pulling on cord.
  - □ Slide open the fuse cover (3) at the side of the plug by using your thumb or a flat screwdriver.
  - □ Remove the fuse (4) carefully.
  - □ Install a new 2.5 Amp fuse (4) and ensure it is secured in place.
  - □ Slide back the fuse cover (3) completely.

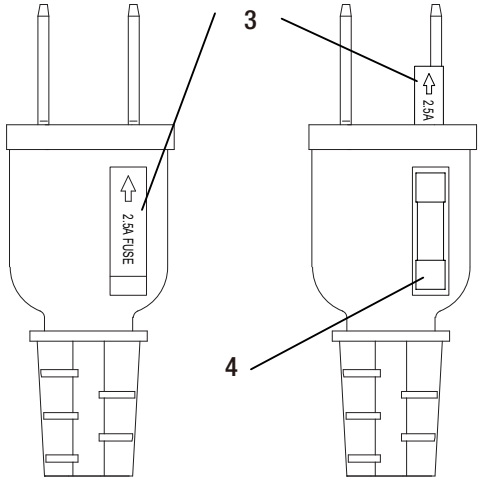

Care and Cleaning

- □ Unplug the fan before cleaning. Do not immerse any portion of the fan in water. Slightly moisten a cloth and then wipe off the surfaces of the fan.
- □ In order to remove dust from the grill, use a vacuum cleaner or remove the front grill by removing the securing screws on the edge of the grill. After cleaning, remount the grill and securing screws.



Questions, problems, missing parts? Before returning to the store,
call Commercial Electric Customer Service
8 a.m. - 7 p.m., EST, Monday-Friday, 9 a.m. - 6 p.m., EST, Saturday

1-877-527-0313

HOMEDEPOT.COM

Retain this manual for future use.