Hunter

44 INCHES

SMALL ROOM

59243

Fan Design May Vary

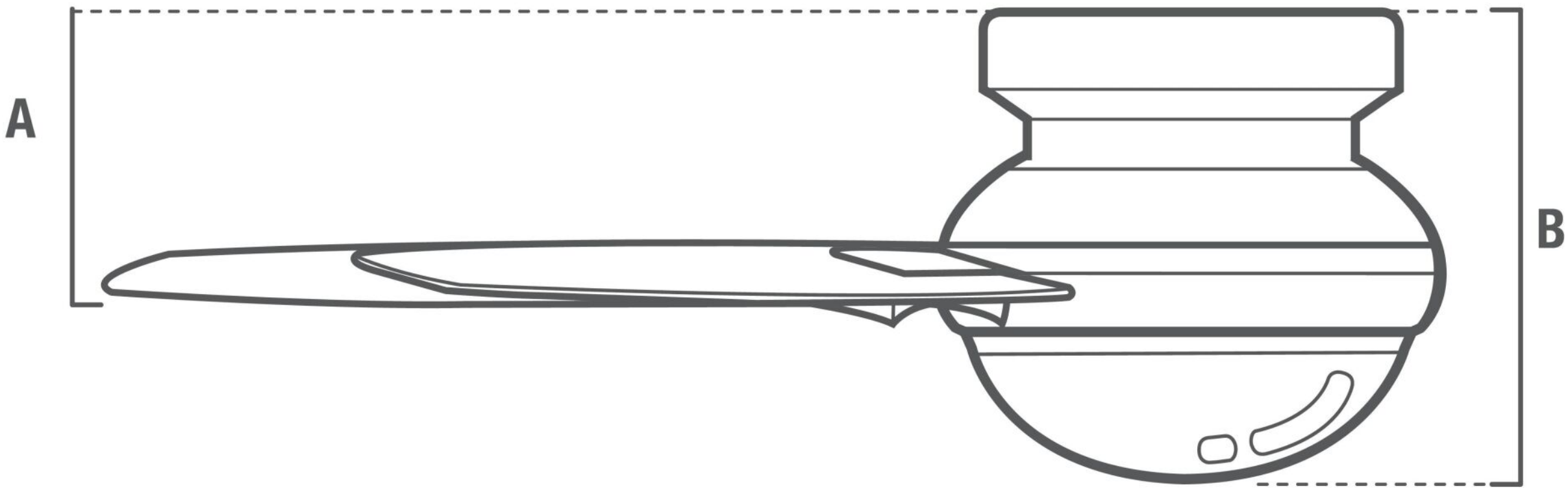

Low Profile:

A: *8.08*
B: *11.03*

Fan Dimensions