ASSEMBLY INSTRUCTIONS

Important Safety Instructions:

- **Please read all instructions before beginning assembly**
- **Please make sure receive all the parcels to start the assembly**
- **For your safety and convenience,assembly by two people is recommended**
- **Use the parts and hardware lists to identify and separate each of the components included**
- **Save all packing materials until assembly is completed to avoid the accidental discarding of smaller parts or hardware**

Note:You may find cushions placed underneath the table or between frames!

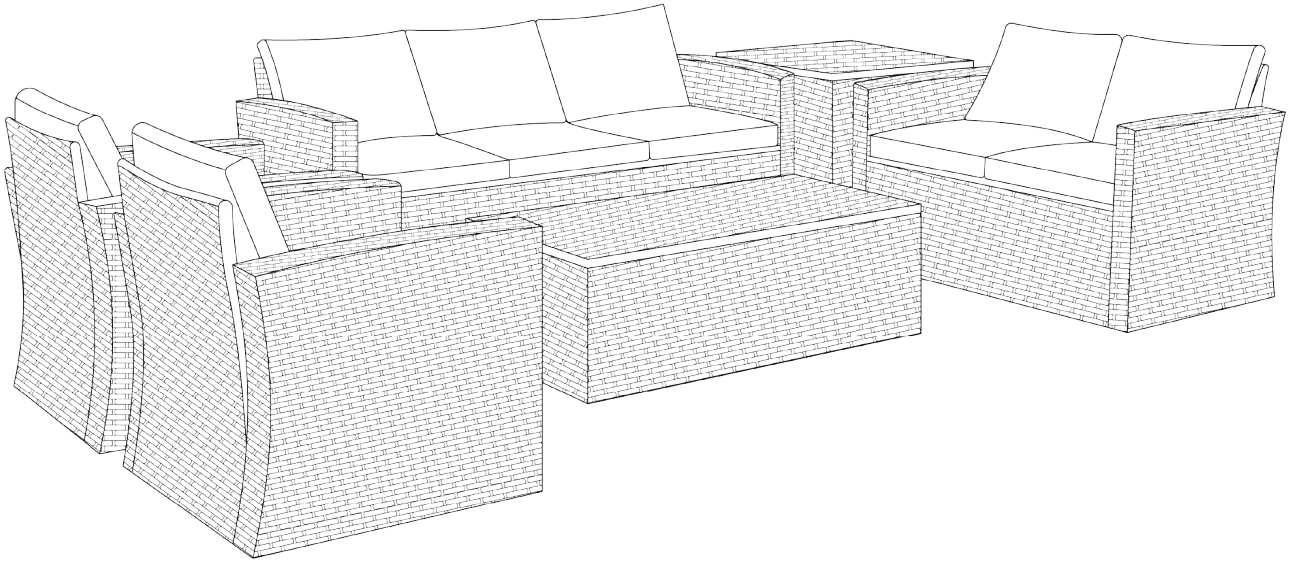

THANK YOU FOR PURCHASING

PARTS LIST

1	RIGHT ARMREST	4PCS	
2	LEFT ARMREST	4PCS	
3	SOFA BACKREST	1PC	
4	SOFA SEAT	1PC	
5	CHAIR BACKREST	2PCS	
6	CHAIR SEAT	2PCS	
7	LOVESEAT BACKREST	1PC	
8	LOVESEAT SEAT	1PC	
9	TABLE TOP	1PC	
10	TABLE BASE	1PC	
11	TABLE SIDE FRONT	1PC	
12	TABLE SIDE RIGHT	1PC	
13	TABLE SIDE BACK	1PC	
14	TABLE SIDE LEFT	1PC	
15	STORAGE TOP	1PC	
16	STORAGE BASE	1PC	
17	STORAGE SIDE FRONT	1PC	
18	STORAGE SIDE RIGHT	1PC	
19	STORAGE SIDE BACK	1PC	
20	STORAGE SIDE LEFT	1PC	
21	SEAT CUSHION	7PCS	
22	BACK CUSHION	7PCS	

HARDWARE LIST

E		BOLT (M6x30 mm)	79PCS+1PC
F		WASHER	79PCS+1PC
H		ALLEN WRENCH	1PC
G		GAS SUPPORT STRUTS	4PCS
I		SELF-TAPPING SCREW (℄ 3X16 mm)	15PCS+1PC
J		WRENCH	1PC

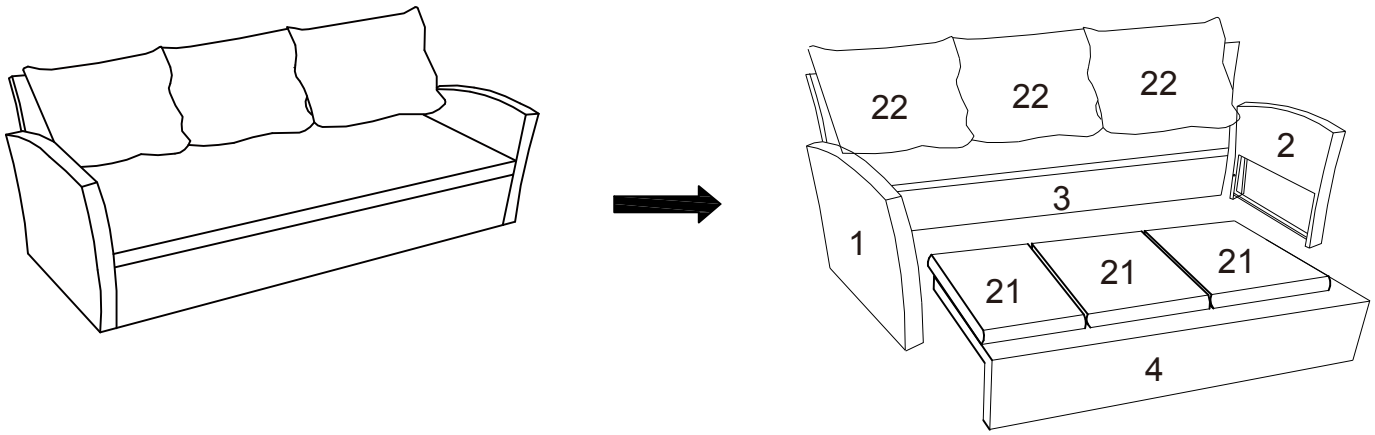

THREE SEATER SOFA X 1

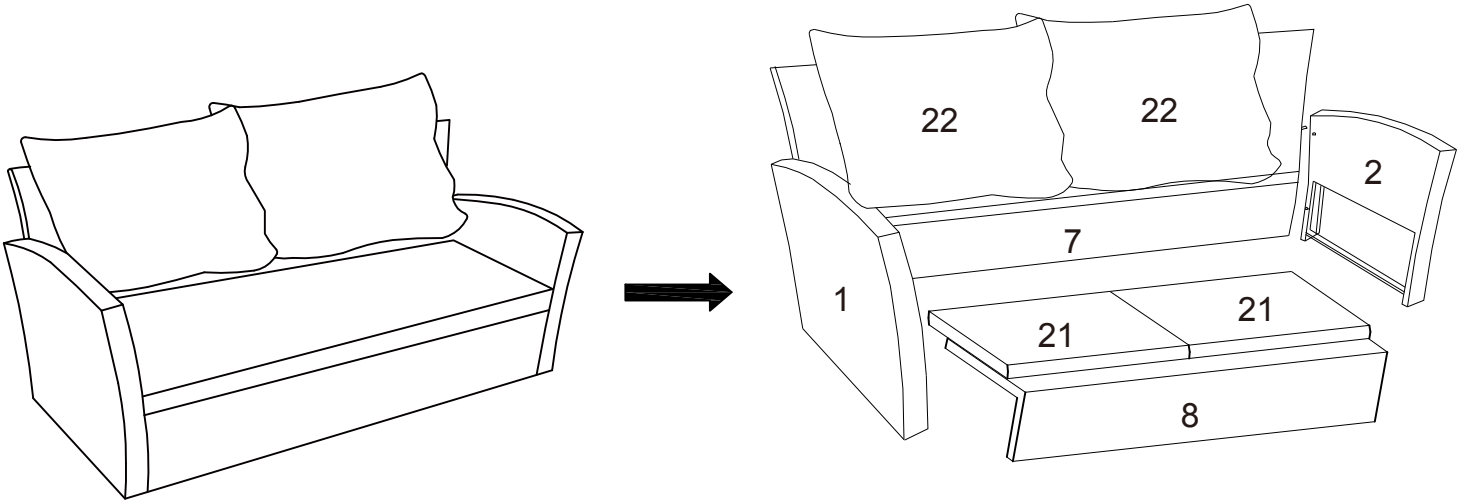

LOVESEAT X 1

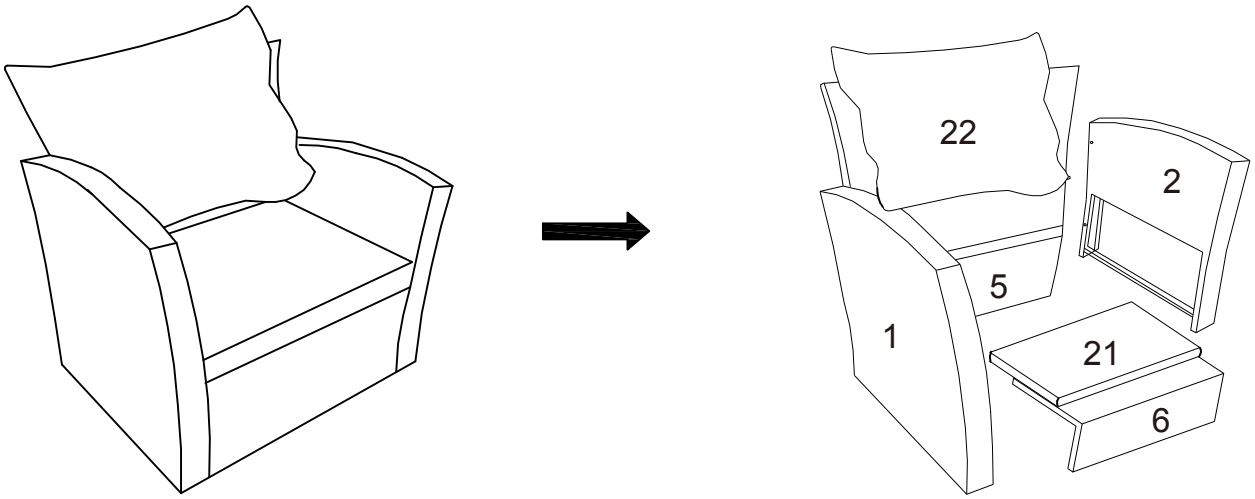

SINGLE CHAIR X 2

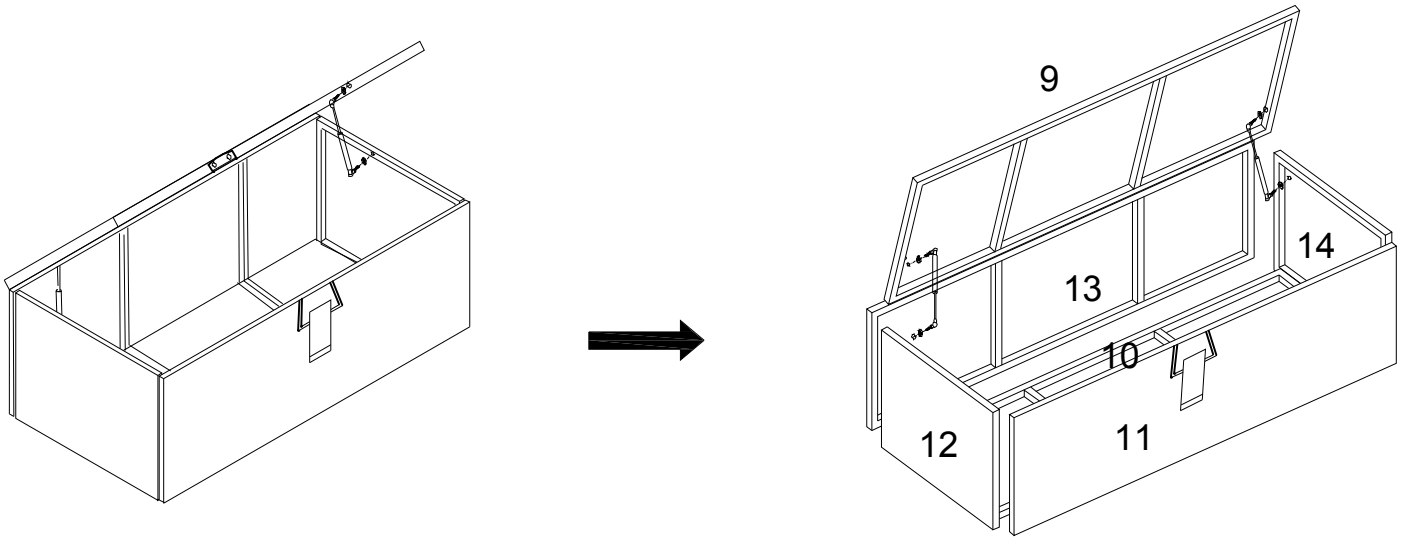

TABLE X 1

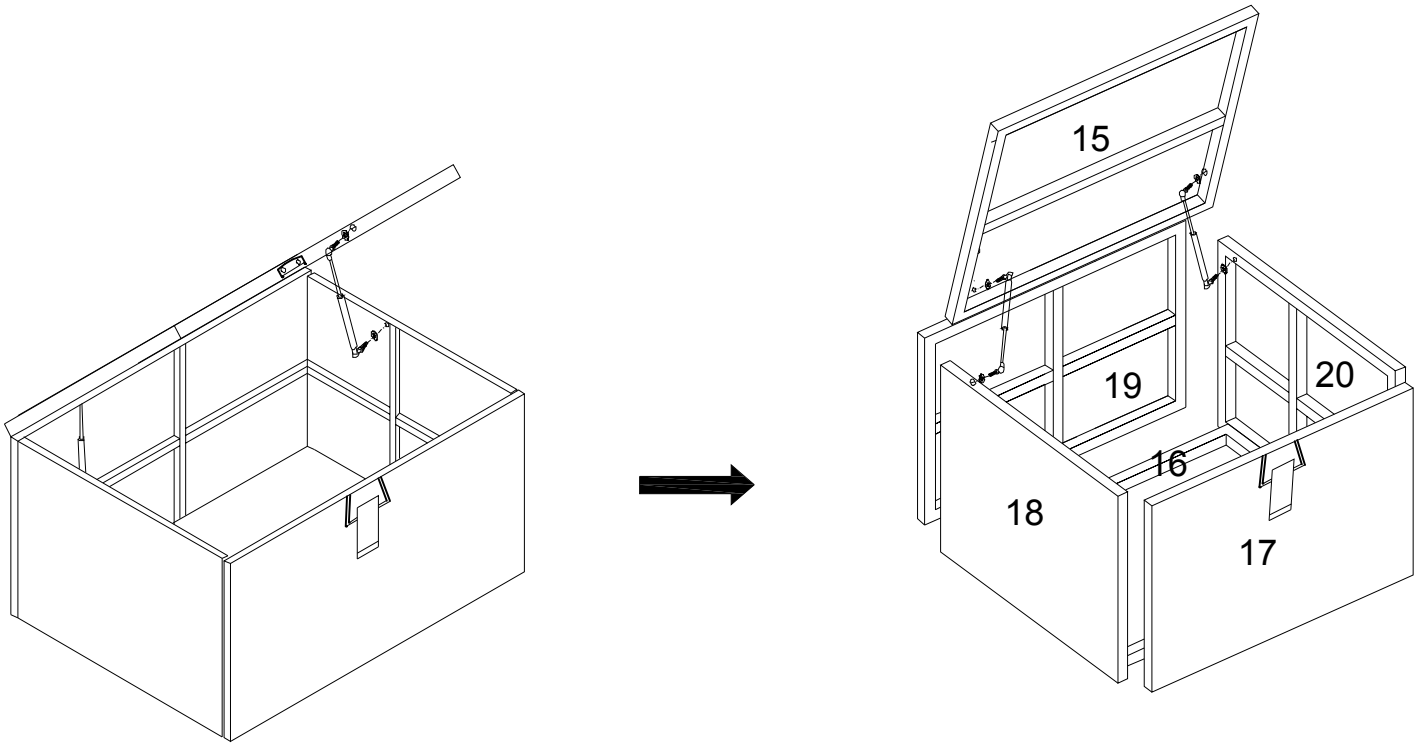

STORAGE X 1

ASSEMBLY INSTRUCTION STEPS

Note: Do not tighten bolts until all parts are connected

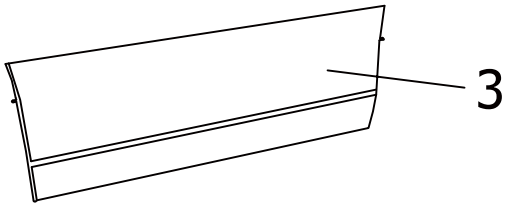

Step 1

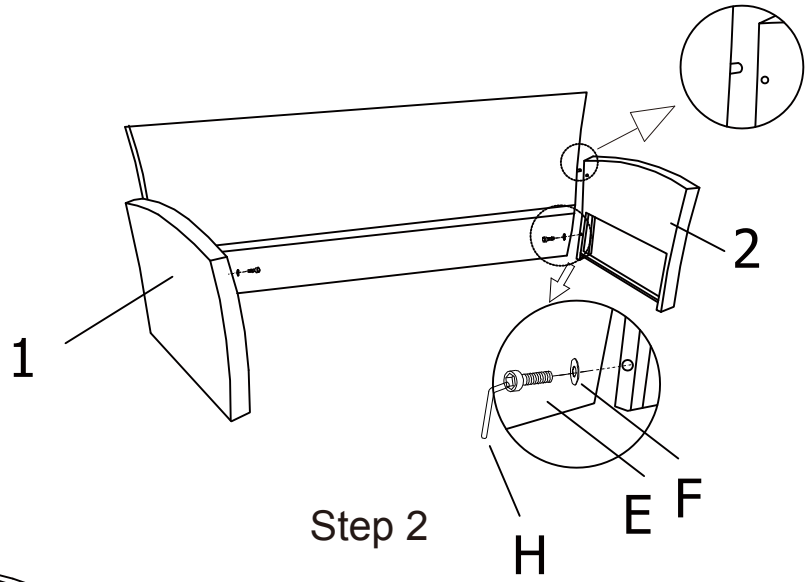

Step 2

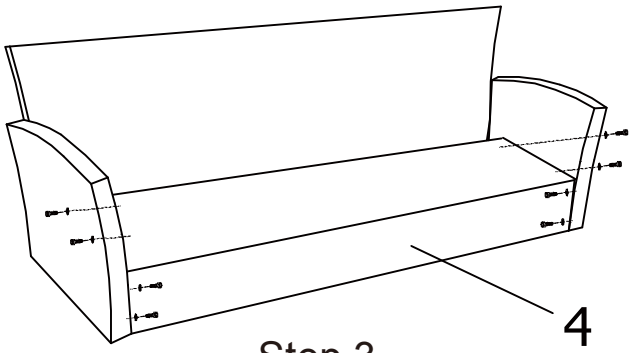

Step 3

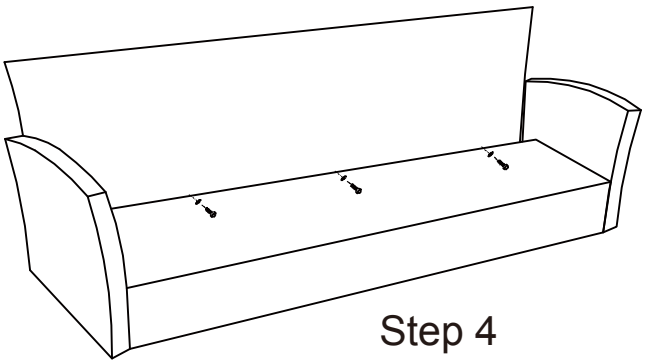

Step 4

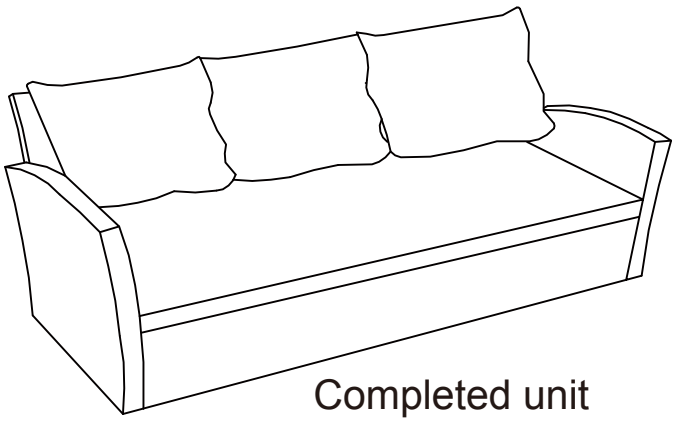

Completed unit

Note: Do not tighten bolts until all parts are connected

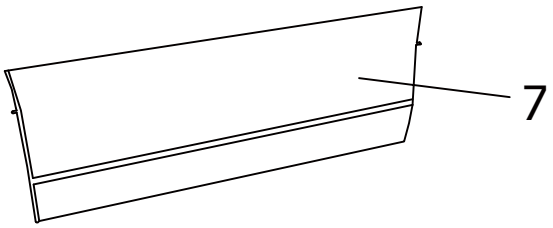

Step 1

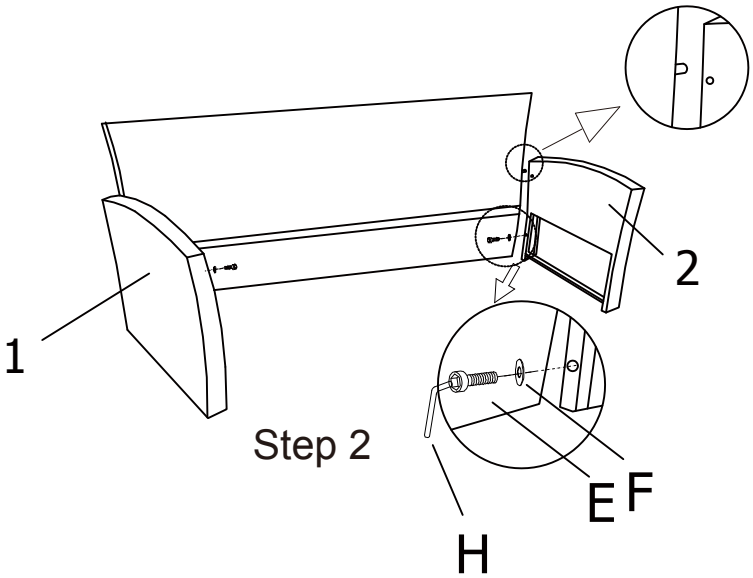

Step 2

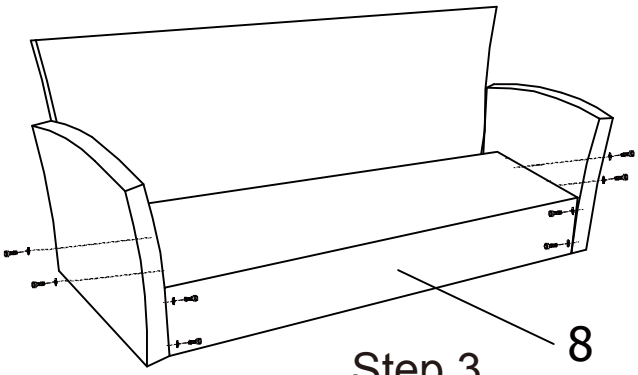

Step 3

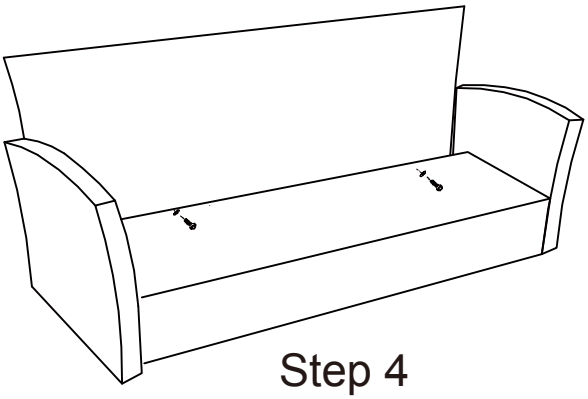

Step 4

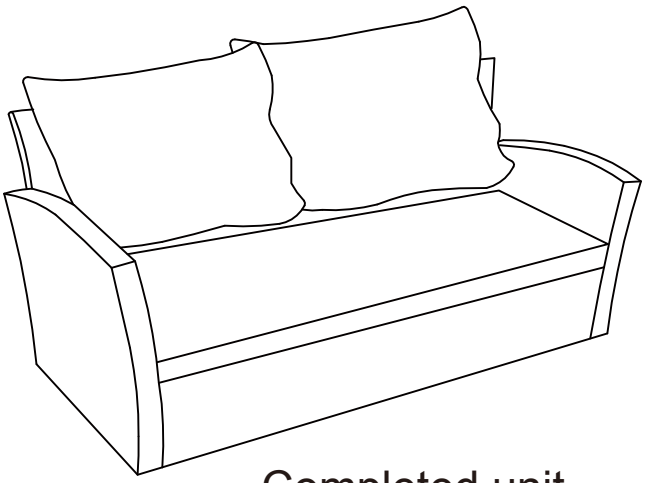

Completed unit

Note: Do not tighten bolts until all parts are connected

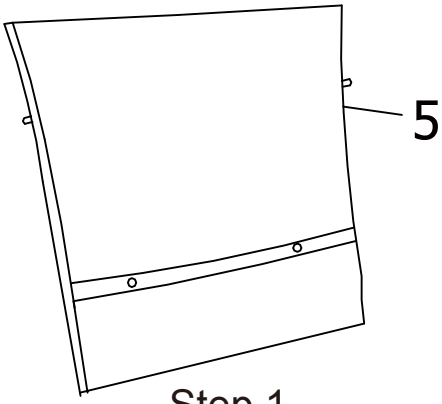

Step 1

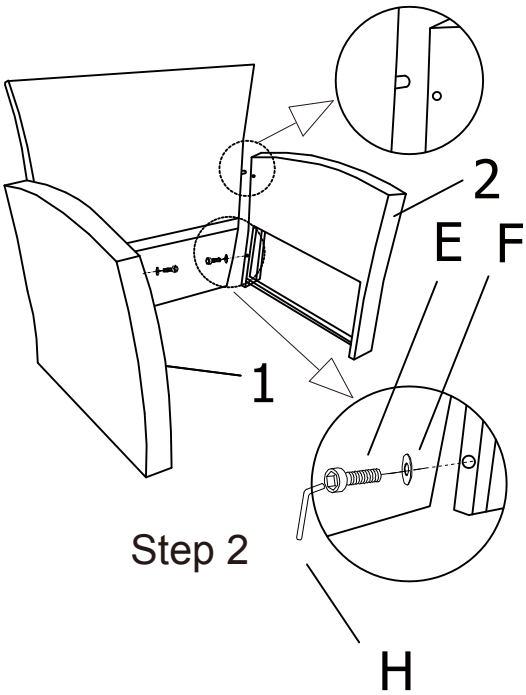

Step 2

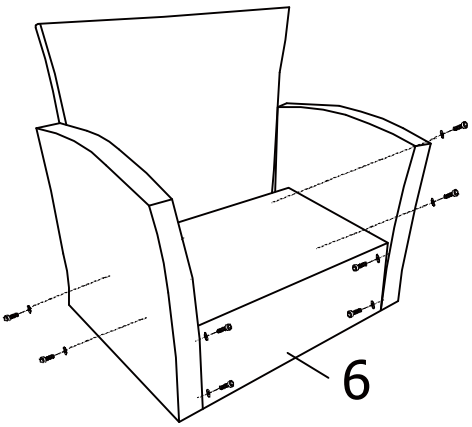

Step 3

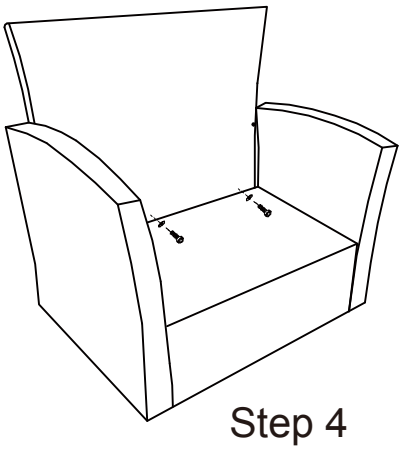

Step 4

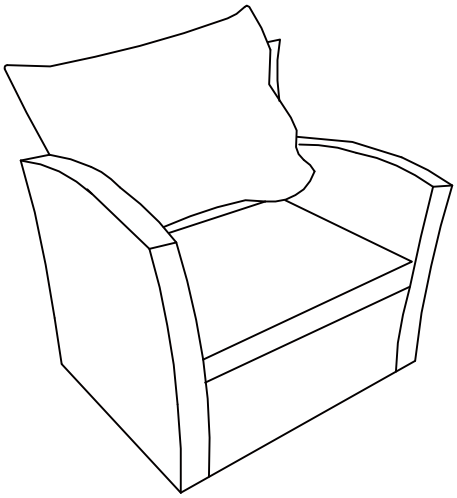

Completed unit

Note: Do not tighten bolts until all parts are connected

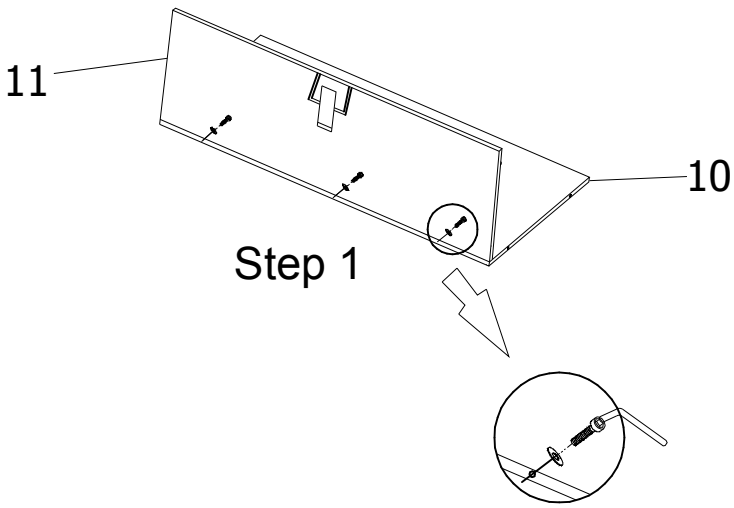

Step 1

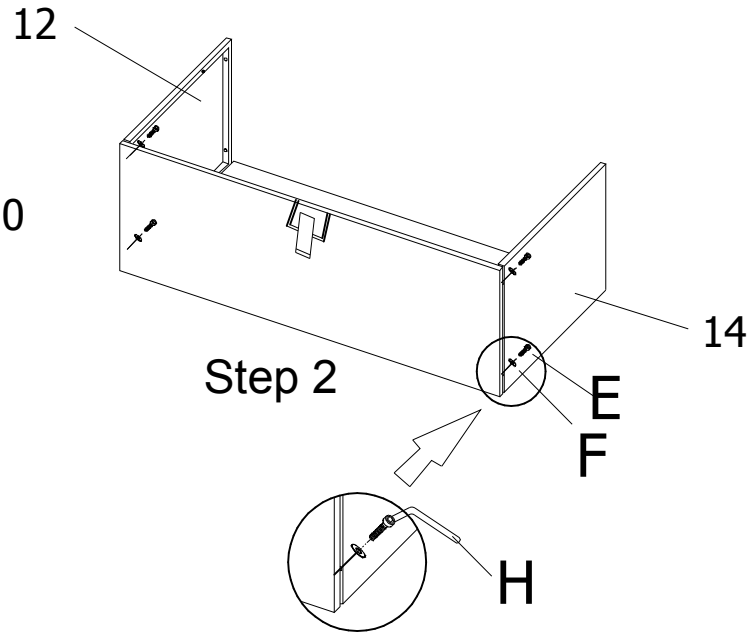

Step 2

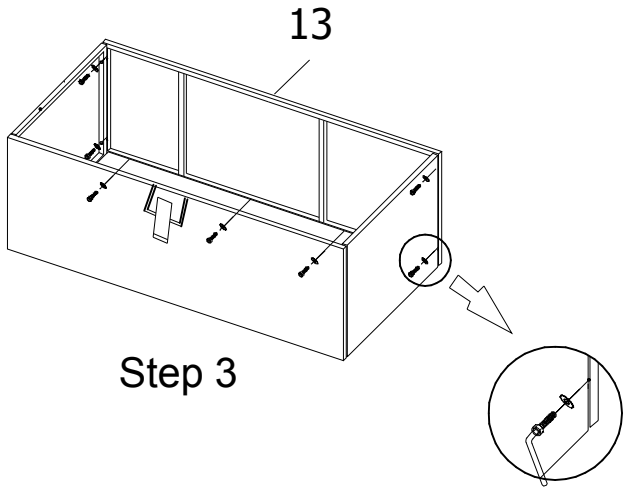

Step 3

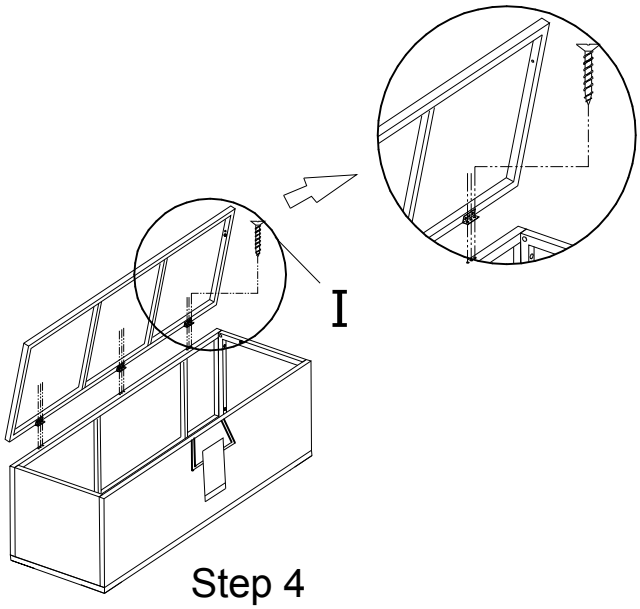

Step 4

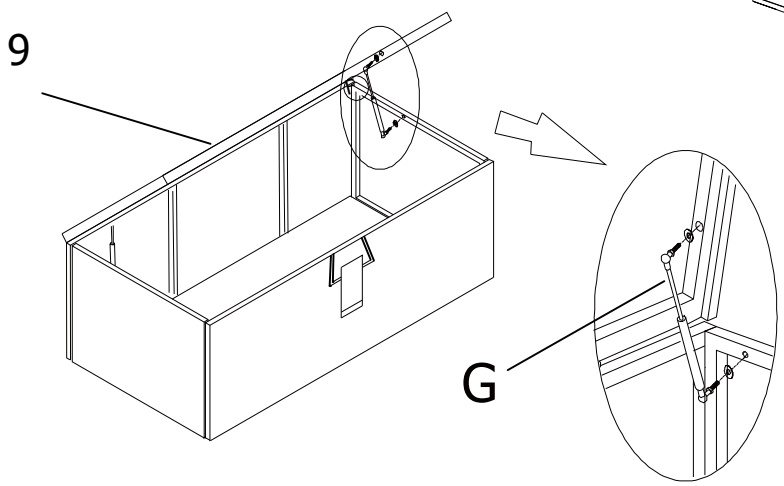

Completed unit

Note: Do not tighten bolts until all parts are connected

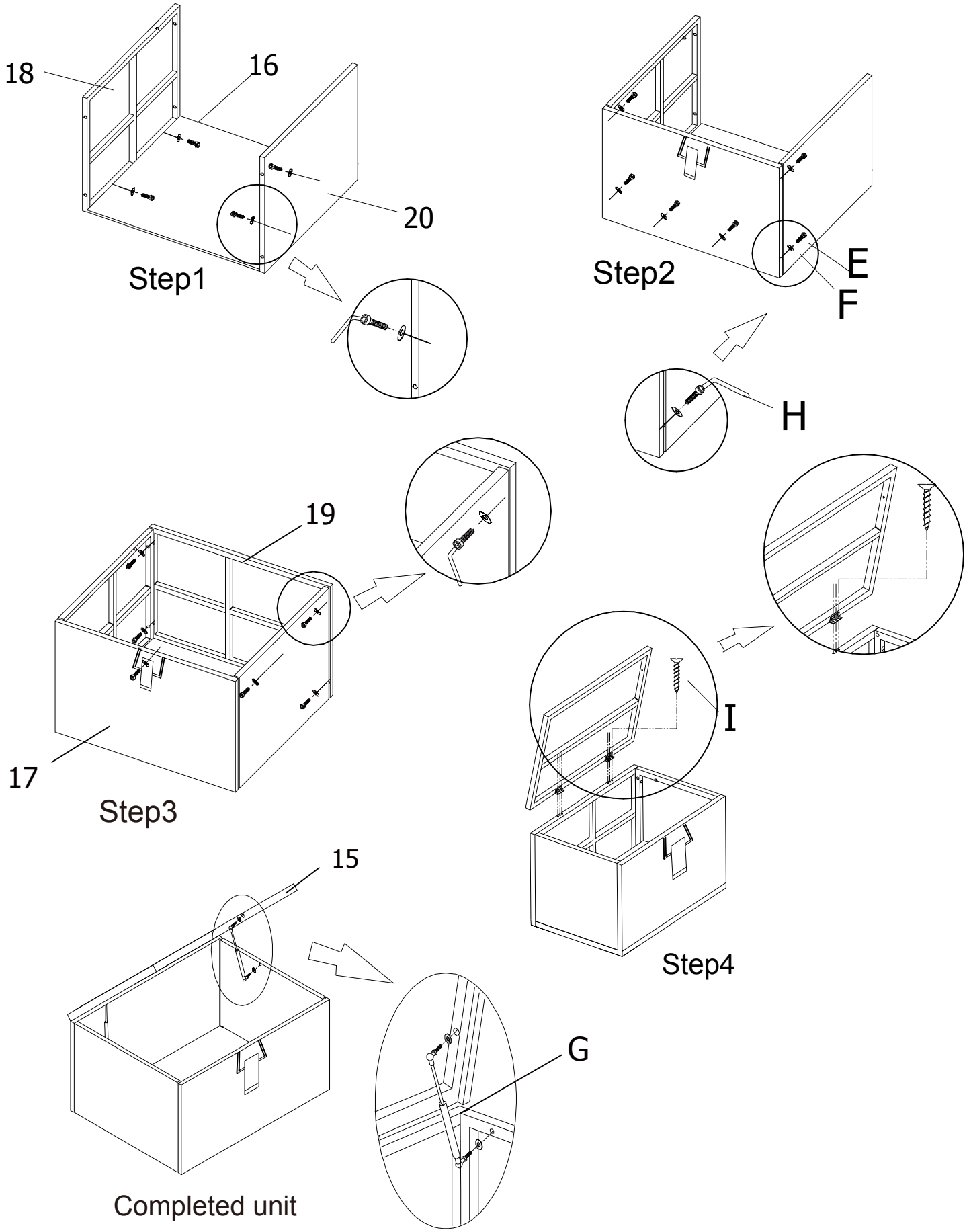

Furniture Care & Cleaning Instructions

- **Do not expose the furniture to strong sunlight, which casues discoloration and shorten the product lifetime.**
- **Do not expose the furniture to extreme heat, cold, or humidity, which may cause wood to swell or warp.**
- **Do not leave the furniture wet with beads of water standing on the furniture.**
- **Wipe spills with a clean dry cloth. Do not use chemicals or abrasives for cleaning!**
- **TAKE NOTE: THE BOLTS MAY SLIGHTLY LOOSEN OVER TIME. IF YOUR FURNITURE FEELS "WOBBLY" OR LOOSE, PLEASE RE-TIGHTEN BOLTS.**

FURNITURE WARRANTIES

90 days warranty on all of our Indoor furniture from date of delivery against manufacturer defects and structural failure under normal use and conditions; 90 days warranty from date of delivery against damage of parts. Parts will be replaced, repaired or refinished in the original color and style, if available; a similar color and style will be offered if the original has been discontinued.

IMPORTANT LIMITATIONS

Please note that our warranties do not cover failure due to any repairs or modifications to the product after purchase, accidental damage, abuse, misuse, commercial use, or normal wear and tear, including: fading, scratched or chipped finishes, weathering under normal weather conditions, staining or discoloration. The term "lifetime" as used in this statement of warranties shall mean a period of no longer than 30 days from the date of delivery of any item covered by a 90 days warranty . The limited warranties described above are extended to the original purchaser of the product only.

Any defects or missing parts must be reported within the 1st 30 days of receipt of the merchandise.

What is Proposition 65?

Proposition 65 is a California law that requires warning labels on products that may contain one of more than 800-plus chemicals or ingredients that the California Office of Environmental health Hazard Assessment(OEHHA) has deemed to cause cancer or other reproductive toxicity. chemicals and elements on this list include wood dust , brass , and other everyday substances, which can be found in very common household items, such as : lamps , tableware , jewelry , crystal glasses , electric cords , beauty products , automobiles , and furniture.

Why Did I Find a Proposition 65 Warning on My Home Goods Product?

We include Proposition 65 warnings on all of our products because there is always a chance that one of the 800-plus common chemicals and ingredients listed under this law could potentially be on our furniture or packing materials. We risk large fines under this law , if we don't include this warning.

Should I worry?

We realize you may be worried finding this warning on our products , but we want to reassure you that the hazardous exposure limits for any of these chemicals have never been found on furniture products that we've shipped to our customers. Additionally, this warning label is very common and can be found on almost every piece of furniture sold in the state of California.

Just How Common Are Proposition 65 Warnings?
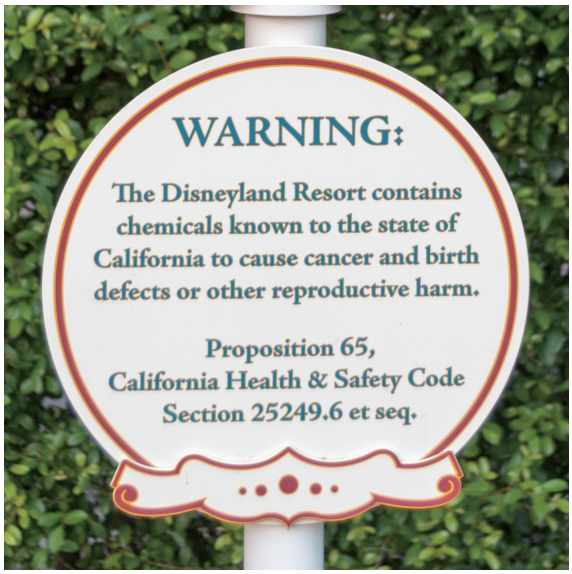
Proposition 65 warnings have become so common in California that it is hard to take a trip to local bank, grocery store , or restaurant without finding at least one warning. In fact, even the Disney Land Resort has a Proposition 65 warning: