CHAMPION
GLOBAL POWER EQUIPMENT™-MC

Champion Power Equipment, Inc.

MODEL #201176

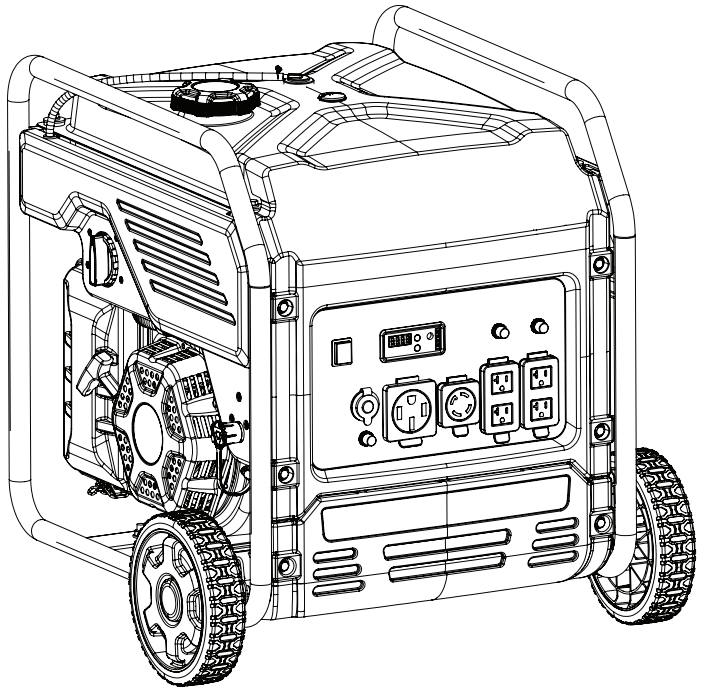

PARTS INFORMATION

9000W TRI-FUEL ELECTRIC START INVERTER GENERATOR

SERIAL NUMBER RANGE: ALL

To order replacement parts please visit:
shop.championpowerequipment.com
or call **1-877-338-0999.**

REV 20231114

TABLE OF CONTENTS

Inverter Generator Parts Diagram 3
Inverter Generator Parts List 4
Engine Parts Diagram 6
Engine Parts List 7
Cylinder Head Parts Diagram 9
Cylinder Head Parts List 10
Carburetor Parts Diagram 11
Carburetor Parts List 12
Fuel Tank Parts Diagram 13
Fuel Tank Parts List 14
Control Panel Parts Diagram 15
Control Panel Parts List 16
Frame Assembly Parts Diagram 17
Frame Assembly Parts List 18
Wiring Diagram 19

INVERTER GENERATOR PARTS DIAGRAM

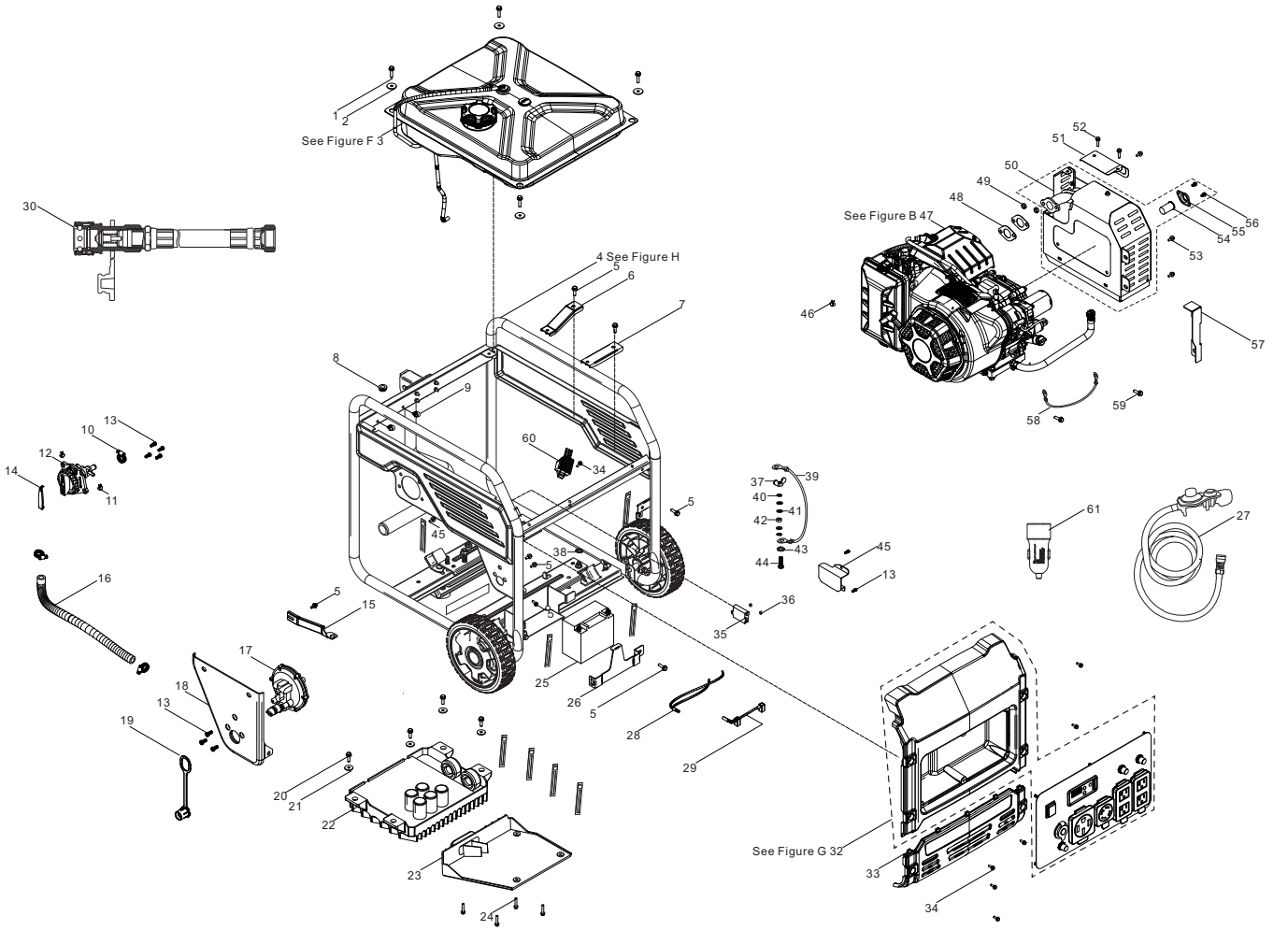

Figure A

INVERTER GENERATOR PARTS LIST

#	Part Number	Description	Qty.
1	90007-000024	Hexagon Flange Bolt, M6 x 25, Black Zinc	4
2	90408-000008	Flat Washer, 6.2 x 25 x 2, Black Zinc	4
3	96003-Y16620-0025	Fuel Tank Assembly - See Figure F	1
4	96003-Y51100-0023	Frame Assembly - See Figure H	1
5	90001-000019	Hexagon Flange Bolt, M6 x 12, Black Zinc	9
6	30081-000001	Mounting Bracket 1, Invertor	1
7	30081-000002	Mounting Bracket 2, Invertor	1
8	90698-000001	Protective Rubber Sleeve	1
9	90684-000005	Clip, Ø8	2
10	90748-000002	Clamp, Ø10 x 16	3
11	90685-000010	Clamp, Ø9 x 0.8 x 8	2
12	16750-000020	Fuel Valve Assembly	1
13	90103-000012	Cross Recess Pan Head Screw, M5 x 12, Black Zinc	9
14	82007-000005	Decorative Covers PMS 109C	1
15	17003-000004	Air Cleaner Support	1
16	90729-000015	Vent Tube, Ø10 x Ø16.8 x 330	1
17	77100-000010	LPG/NG Regulator, Auxiliary	1
18	51136-000002	Mounting Plate, LPG/NG Regulator	1
19	90722-000019	Plug 1, LPG/NG Inlet	1
20	90001-000026	Hexagon Flange Bolt, M6 x 25, White Zinc	4
21	90408-000018	Flat Washer, Black Zinc, Ø22 x Ø6.3 x 2, White Zinc	4
22	30043-000026	Invertor, 6.8/7.5kW 120V/240V 60Hz	1
23	19313-000002	Air Guide Glate, Inverter	1
24	90254-000002	Bolts / Washer Assembly, M4 x 16, White Zinc	4
25	31110-000006	Battery, 12V/14Ah, 150 x 85 x 130	1
26	31142-000003	Clamp, Battery	1
27	77300-000006	LPG Hose With Regulator	1
28	31114-000013	DC Wire Harness, Engine	1

#	Part Number	Description	Qty.
29	31112-000014	DC Wire Harness, Battery	1
30	90729-000016	NG Hose With Adapter, Ø18.5 x Ø12.5 x 7600	1
31	90684-000001	Clip, 130 mm	7
32	35610-000135	Control Panel Assembly - See Figure G	1
33	82007-000002	Decorative Plate, Panel	1
34	90001-000023	Hexagon Flange Bolt, M6 x 16, Black Zinc	7
35	35720-000002	CO Alarm	1
36	90305-000001	Hexagon Flange Nut, M4, Black Zinc	2
37	90312-000001	Wing Nut, M6, Black Zinc	1
38	90415-000003	Lock Washer, Toothed, White Zinc	1
39	30009-000002	Grounding Wire	1
40	90403-000003	Spring Washer, Black Zinc	2
41	90408-000006	Flat Washer, Black Zinc	3
42	90303-000003	Nut, M6, Black Zinc	1
43	90415-000002	Lock Washer, Toothed, Black Zinc	1
44	90001-000027	Hexagon Flange Bolt, M6 x 25, Black Zinc	1
45	76021-000001	Protective Plate, CO Sensor	1
46	90685-000007	Clamp, Ø9.5 x 0.8 x 8	1
47	96100-420DTVI0-01	Engine - See Figure B	1
48	18001-000004	Gasket, Exhaust Outlet	2
49	90303-000006	Nut, M8, Black Zinc	2
50	18100-000042	Muffler Assembly	1
51	18013-000003	Support Plate, Muffler	1
52	90022-000001	Hexagon Flange Bolt, M6 x 12, Black Zinc	3
53	90001-000041	Hexagon Flange Bolt, M8 x 16, Black Zinc	2
54	18250-000002	Spark Arrestor	1
55	18213-000002	Pressure Plate, Spark Arrestor	1
56	90005-000002	Hexagon Flange Bolt, M5 x 10, White Zinc	2
57	76021-000002	Protective Plate, Muffler	1
58	30009-000018	Grounding Wire	1

#	Part Number	Description	Qty.
59	90001-000018	Hexagon Flange Bolt, M6 x 12, White Zinc	2
60	30060-000003	AVR	1
61	35613-000001	12VDC USB Adapter	1

ENGINE PARTS DIAGRAM

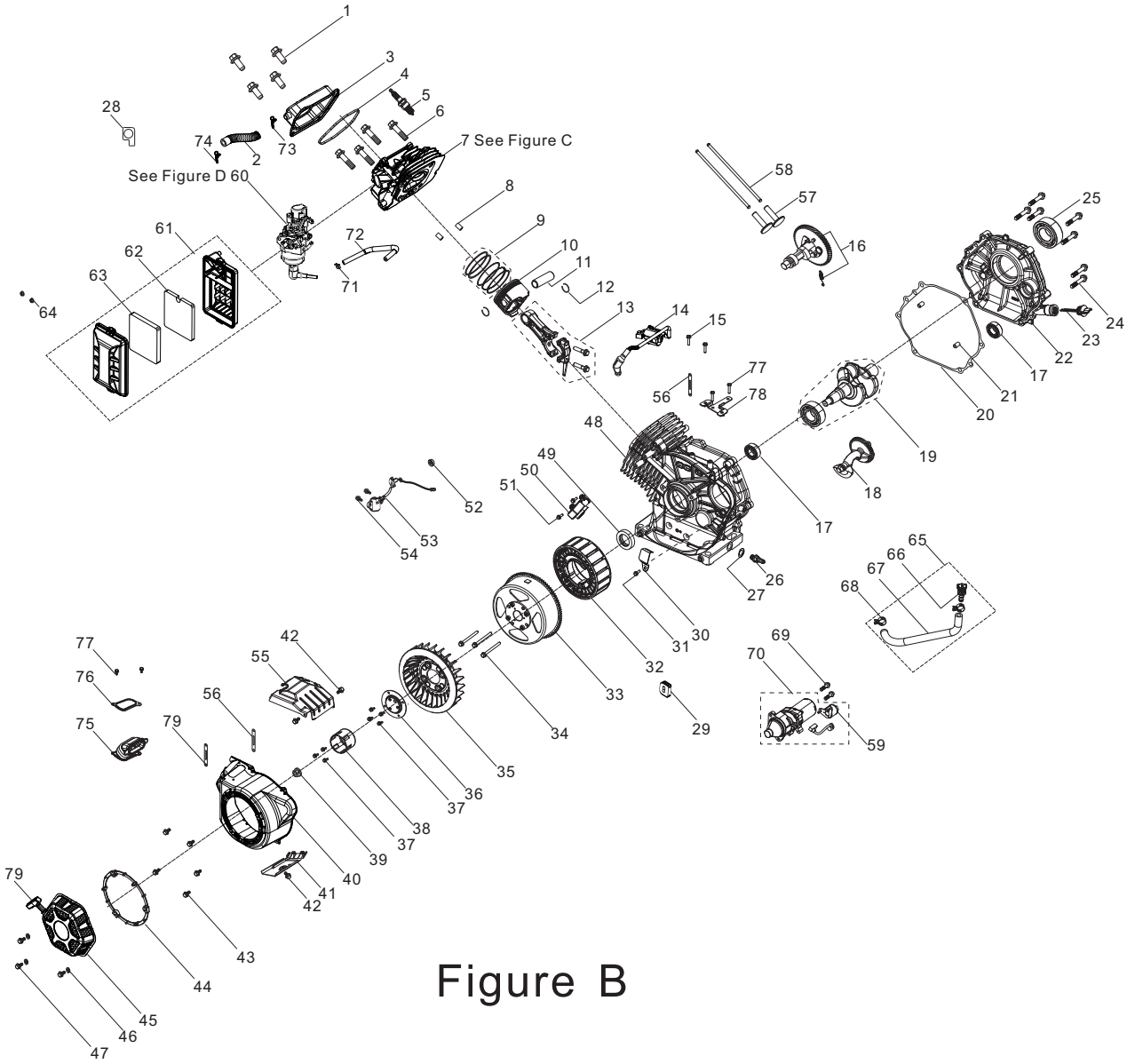

Figure B

ENGINE PARTS LIST

#	Part Number	Description	Qty.
1	90001-000020	Hexagon Flange Bolt, M6 x 14, White Zinc	4
2	17004-000027	Breather Tube, Ø11.5 x Ø17 x 90	1
3	12410-000002	Cylinder Head Cover Subassembly, Octagon, White Zinc	1
4	12004-000006	Cylinder Head Cover Gasket	1
5	30010-000006	Spark Plug, F7RTJC	1
6	12003-000004	Cylinder Head Bolt, M10 x 80, White Zinc	4
7	96003-Z12140-0037	Cylinder Head Assembly	1
8	90502-000008	Pin, Ø12 x 20	2
9	13200-000005	Piston Rings Set	1
10	13111-000003	Piston	1
11	13121-000004	Piston Pin, Ø20 x Ø14.75 x 62	1
12	13122-000002	Clip, Piston Pin	2
13	13010-000004	Connecting Rod	1
14	30400-000035	Ignition Coil	1
15	90001-000024	Hexagon Flange Bolt, M6 x 20, White Zinc	2
16	14200-000007	Camshaft Assembly	1
17	90548-000001	Bearing, 6202	2
18	13400-000001	Shaft Assembly, Balancing	1
19	13300-000035	Crankshaft Assembly	1
20	11001-000004	Crankcase Gasket	1
21	90502-000002	Pin, Ø8 x 12	2
22	11411-000025	Crankcase Cover Assembly	1
23	15010-000007	Oil Dipstick Subassembly	1
24	90001-000050	Hexagon Flange Bolt, M8 x 40, White Zinc	7
25	90547-000009	Bearing, 6207	1
26	90689-000001	Connector, Oil Drain Hose	1

#	Part Number	Description	Qty.
27	90412-000003	Flat Washer, Ø12 x Ø21 x 2	1
28	90804-000001	Stop Block	1
29	28101-000003	Rubber Plug	1
30	30002-000003	Wiring Clamp, Magneto	1
31	90001-000001	Hexagon Flange Bolt, M5 x 10, White Zinc	1
32	30120-000029	Stator Component, Ø179 x 53	1
33	30110-000008	Rotor Component, Ø179 x 53	1
34	90007-000020	Hexagon Flange Bolt, M6 x 65, White Zinc	3
35	19352-000015	Cooling Fan, Engine	1
36	28020-000001	Starter Pulley Base	1
37	90001-000018	Hexagon Flange Bolt, M6 x 12, White Zinc	7
38	28002-000014	Starter Pulley, White Zinc	1
39	13501-000002	Flywheel Nut, M16 x 1.5, White Zinc	1
40	28110-000035	Shroud	1
41	19304-000004	Cylinder Body Shroud, White Zinc	1
42	90001-000018	Hexagon Flange Bolt, M6 x 12, White Zinc	3
43	90001-000019	Hexagon Flange Bolt, M6 x 12, Black Zinc	5
44	28261-000003	Circlip, Rope	1
45	28200-000025	Recoil Starter Assembly	1
46	90408-000006	Flat Washer	3
47	90001-000025	Hexagon Flange Bolt, M6 x 20, Black Zinc	3
48	11310-000029	Crankcase Subassembly	1
49	90682-000006	Oil Seal	1
50	30130-000008	Trigger Assembly	1
51	90001-000007	Hexagon Flange Bolt, M5 x 16, White Zinc	2
52	90305-000014	Hexagon Flange Lock Nut, M10, White Zinc	1
53	37060-000006	Oil Sensor	1
54	90001-000022	Hexagon Flange Bolt, M6 x 16, White Zinc	2
55	19305-000004	Cylinder Body Shroud 2	1
56	90684-000003	Clip, 100 mm	1

#	Part Number	Description	Qty.
57	14081-000003	Valve Lifter	2
58	14070-000002	Valve Rod	2
59	30500-000001	Starting Relay	1
60	96003-Z16100-0034	Carburetor Assembly - See Figure D	1
61	17100-000031	Air Cleaner	1
62	17151-000002	Element 1, Air Cleaner	1
63	17151-000001	Element 2, Air Cleaner	1
64	90305-000007	Hexagon Flange Nut, M6, White Zinc	2
65	11011-000009	Oil Drain Hose Assembly	1
66	15031-000001	Oil Plug	1
67	11011-000008	Oil Drain Hose	1
68	90685-000015	Clamp	2
69	90001-000044	Hexagon Flange Bolt, M8 x 25, White Zinc	2
70	30300-000008	Motor Assembly, Starting	1
71	90748-000002	Clamp 1	1
72	90729-000014	Vent Tube, Ø9.5 x Ø16.8 x 200	1
73	90685-000016	Clamp, Ø17	1
74	90685-000014	Clamp, Ø16	1
75	28252-000001	Air Guide Tube, Inverter	1
76	16676-000001	Mounting Plate	1
77	90001-000003	Hexagon Flange Bolt, M5 x 12, White Zinc	4
78	51124-000014	Mounting Bracket	1
79	28210-000004	Pull Cord Handle	1

CYLINDER HEAD PARTS DIAGRAM

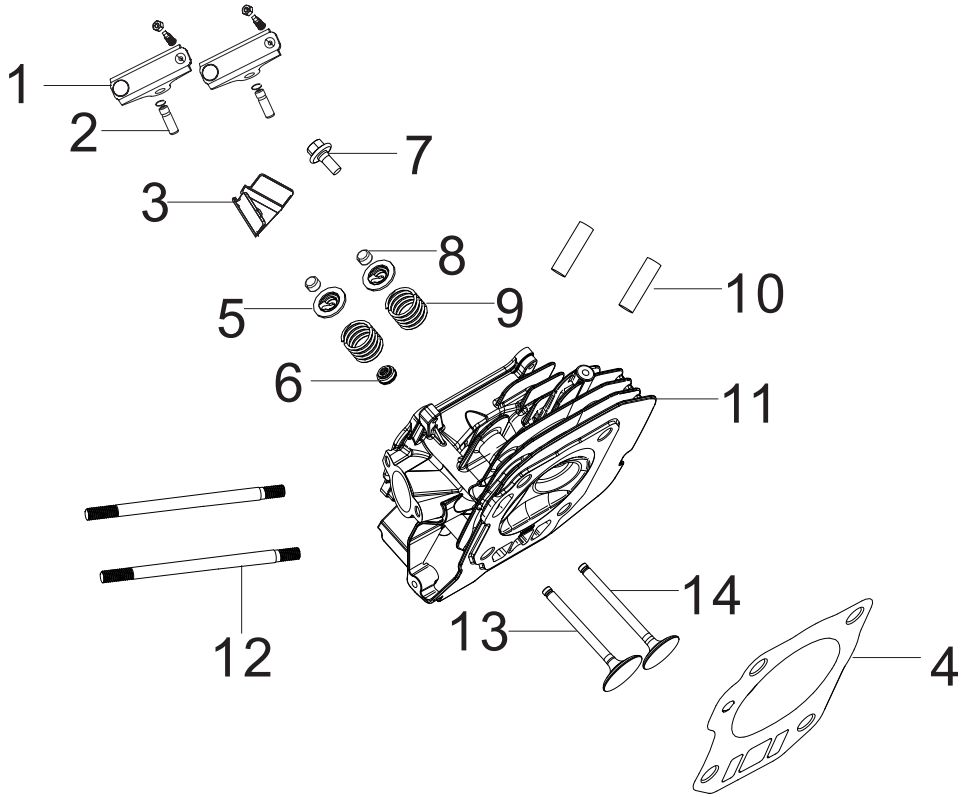

Figure C

CYLINDER HEAD PARTS LIST

#	Part Number	Description	Qty.
1	14310-000003	Valve Rocker Subassembly	2
2	14318-000004	Valve Rocker Shaft Subassembly	2
3	12419-000002	Pin Plate, Cylinder Head Cover	1
4	12131-000006	Cylinder Head Gasket	1
5	12107-000001	Valve Spring Retainer	2
6	12101-000005	Seal Guide	1
7	90001-000019	Hexagon Flange Bolt, M6 x 12, Black Zinc	1
8	12104-000001	Valve Adjusting Cap, Ø5.6 x Ø8.5 x 5.2	2
9	12103-000009	Valve Spring	2
10	90203-000001	Stud, M8 x 34, Black Zinc	2
11	12140-000009	Cylinder Head Subassembly	1
12	90204-000011	Stud, M6/M8 x 110, Black Zinc	2
13	12111-000002	Inlet Valve	1
14	12121-000003	Exhaust Valve	1

CARBURETOR PARTS DIAGRAM

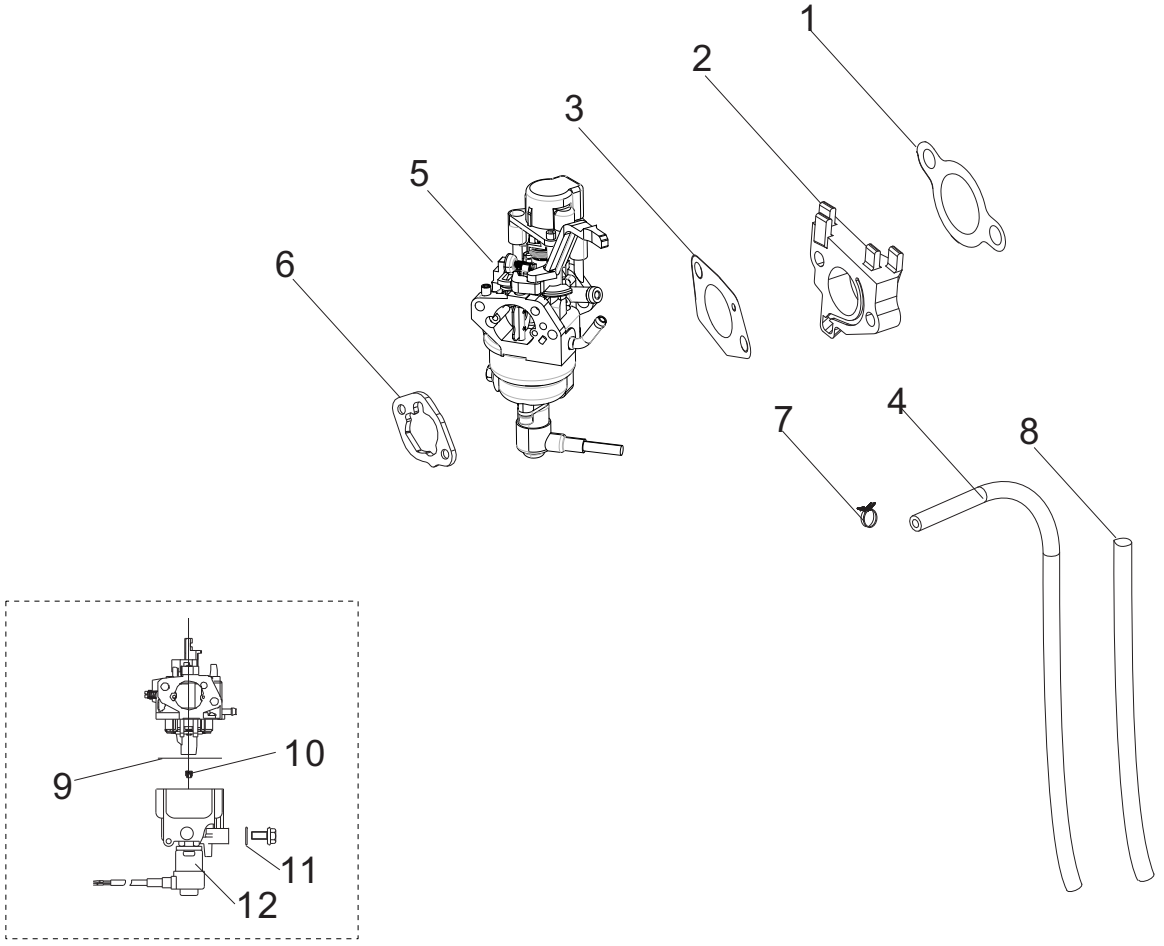

Figure D

CARBURETOR PARTS LIST

#	Part Number	Description	Qty.
1	17002-000004	Inlet Gasket	1
2	16003-000018	Carburetor Insulator Plate	1
3	16001-000003	Carburetor Gasket	1
4	90686-000048	Fuel Tube, Ø4 x Ø10 x 245	1
5	16100-000067	Carburetor Assembly	1
6	17001-000010	Air Cleaner Gasket	1
7	90685-000010	Clamp, Ø10.5 x 0.8 x 8	1
8	30431-000024	Rubber Sleeve, Ø19.5 x Ø18 x 165	1
9	16112-000012	Float Seal Ring	1
10	16161-000073	Main Jet(H128×0.50), Standard	1
	16161-000059	Main Jet(H128×0.53), Altitude 3000-6000 Feet	/
	16161-000074	Main Jet(H128×0.56), Altitude 6000-8000 Feet	/
11	90681-000013	Seal Ring	1
12	16108-000007	Solenoid Valve	1

FUEL TANK PARTS DIAGRAM

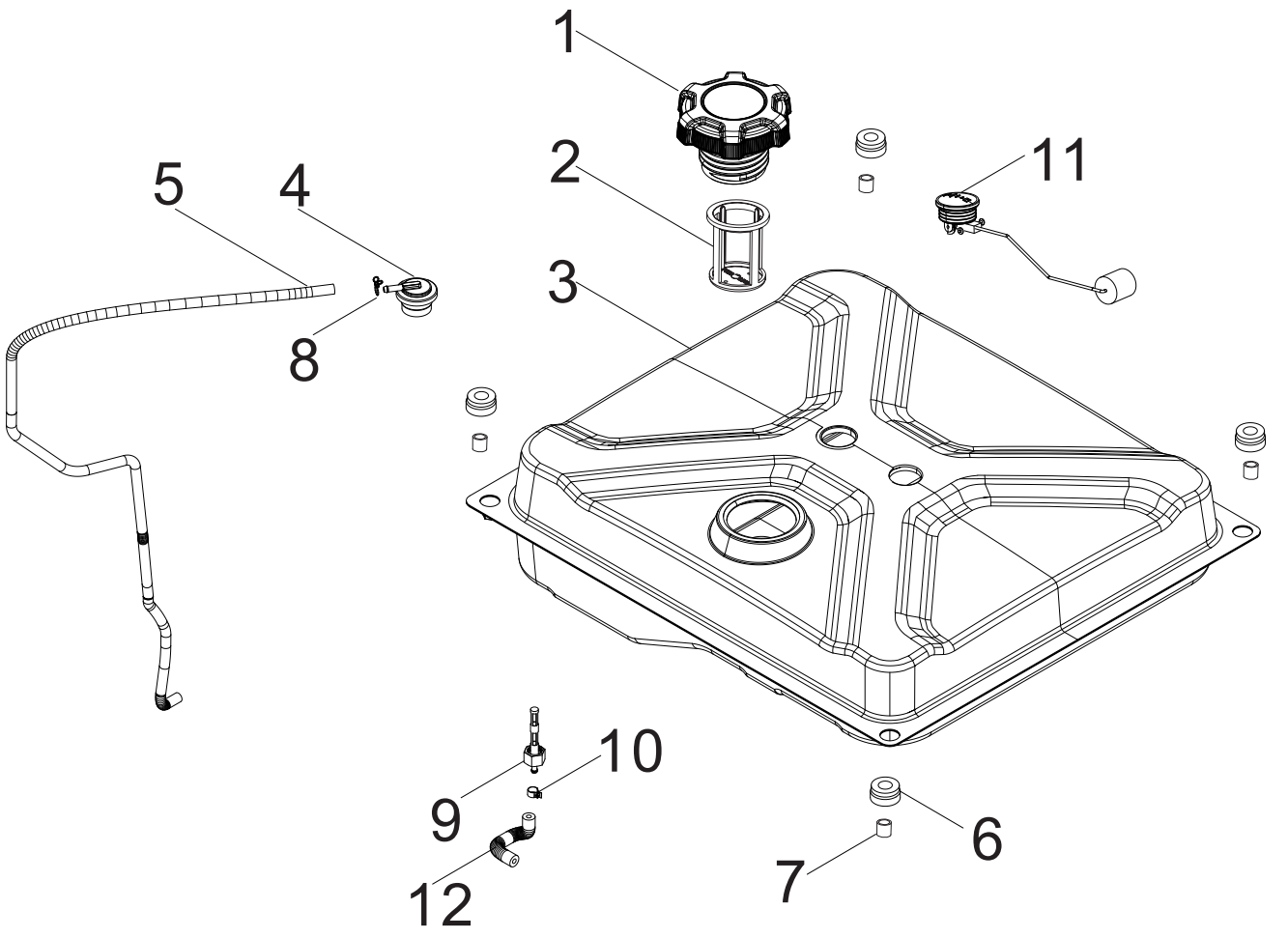

FUEL TANK PARTS LIST

#	Part Number	Description	Qty.
1	16730-000010	Fuel Tank Cap	1
2	16652-000009	Fuel Filter	1
3	16620-000020	Fuel Tank, 16.4L	1
4	15150-000003	One Way Valve	1
5	16804-000025	Vent Tube, Ø4.5 x Ø8.5 x 860	1
6	16601-000001	Fuel Tank Rubber Sleeve	4
7	90683-000001	Bushing	4
8	90740-000005	Clamp, Ø9	1
9	16680-000005	Fuel Valve Assembly	1
10	90685-000002	Clamp, Ø9 x Ø0.8 x 8	1
11	37200-000019	Fuel Gauge	1
12	90686-000050	Fuel Tube, Carburetor, Ø4 x Ø10 x 110	1
13	30431-000008	Rubber Sleeve, Ø9.5 x Ø11 x 80	1

CONTROL PANEL PARTS DIAGRAM

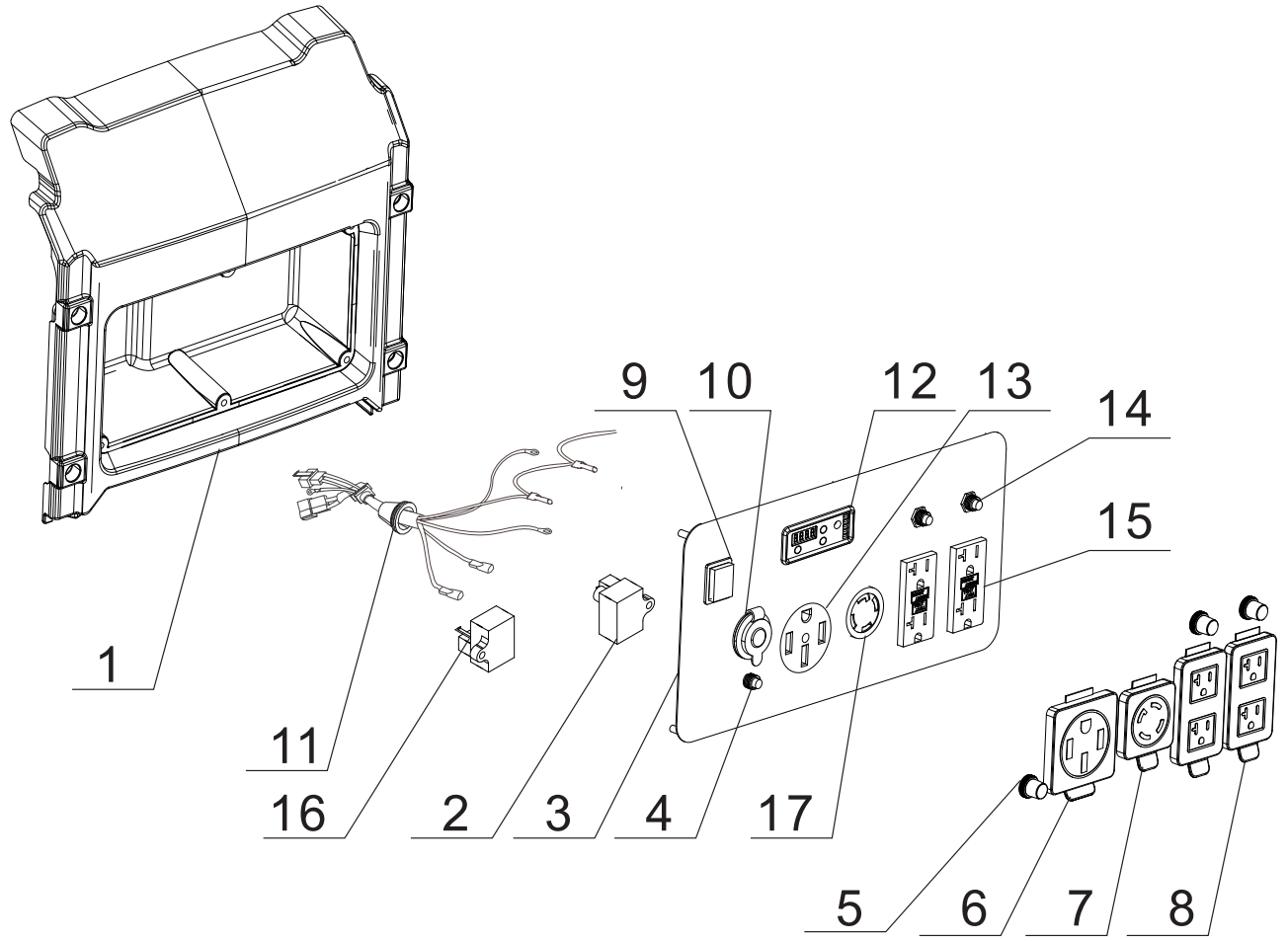

Figure G

CONTROL PANEL PARTS LIST

#	Part Number	Description	Qty.
1	35680-000022	Control Panel Housing	1
2	30008-000005	Control Module, EV0202	1
3	35650-000029	Control Panel	1
4	31234-000002	8Amp Circuit Breaker, Push Button, 125/250V	1
5	35654-000005	Receptacle Cover	3
6	35654-000012	Receptacle Cover,14-50R	1
7	35654-000010	Receptacle Cover,L14-30R	1
8	35654-000013	Receptacle Cover, GFCI Receptacle	2
9	35160-000011	Switch Assembly	1
10	35619-000003	Automotive Receptacle, 12V DC	1
11	35660-000036	Wire Harness, Control Panel	1
12	35632-000014	Intelliguage, INT5CINV	1
13	35614-000012	14-50R Receptacle, 50A, 125V/250V	1
14	31234-000003	20Amp Circuit Breaker, Push Button, 125/250V	2
15	35614-000018	5-20R GFCI Receptacle, 20A/125V	2
16	30007-000002	Charger Module, EC0803	1
17	35614-000004	L14-30R Receptacle, 125V/250V/30A	1

FRAME ASSEMBLY PARTS DIAGRAM

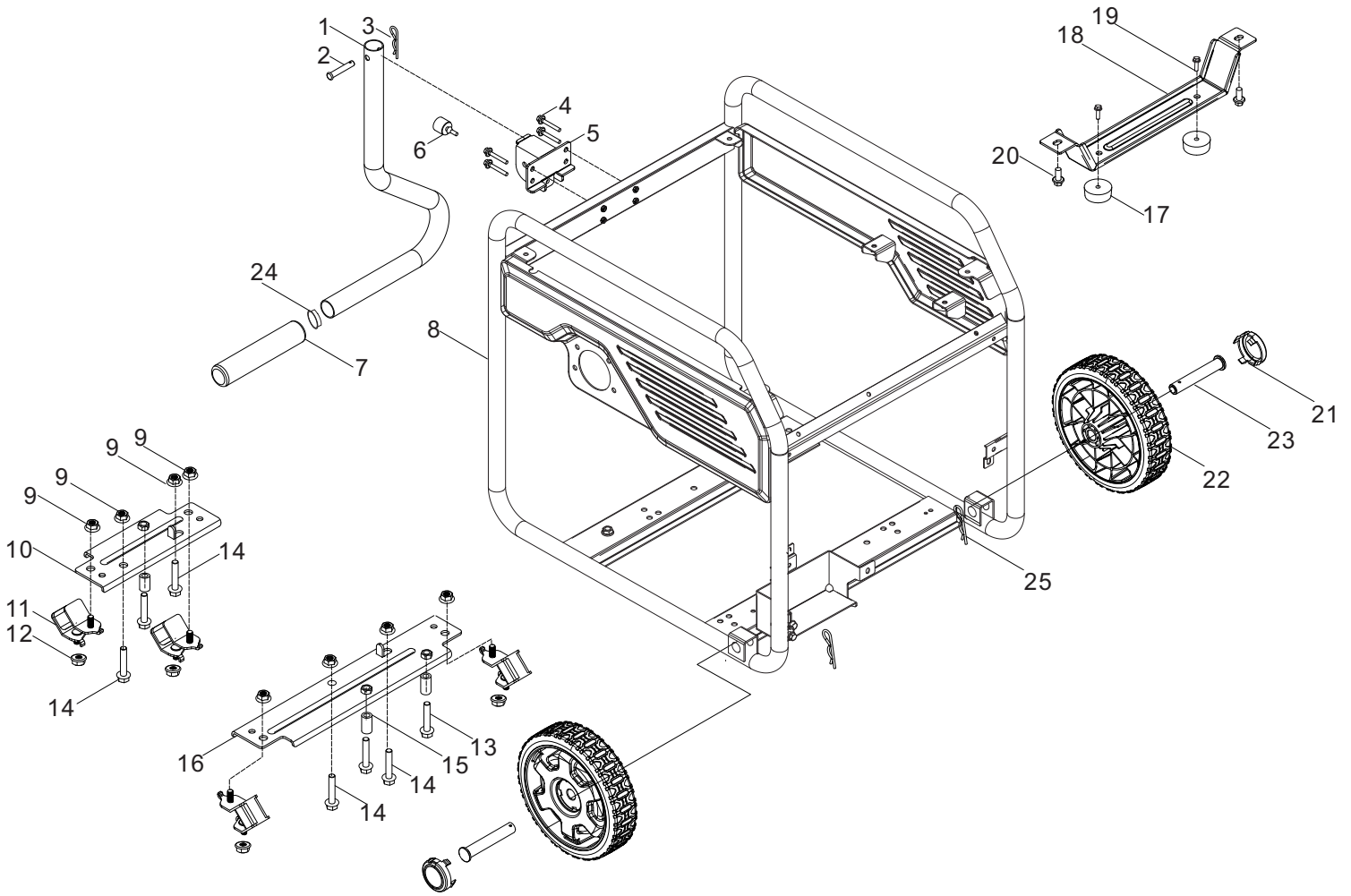

Figure H

FRAME ASSEMBLY PARTS LIST

#	Part Number	Description	Qty.
1	54110-000014	Handle, Ø28 x 1.2	1
2	90504-000002	Pin Shaft, Black Zinc	1
3	90583-000001	R Pin	1
4	90001-000031	Hexagon Flange Bolt, M6 x 30, Black Zinc	4
5	54113-000004	Handle Connecting Seat	1
6	51008-000001	Shock Absorption Pole	1
7	54101-000004	Handle Sheath	1
8	51100-000044	Frame Assembly, 580 x 485 x 555	1
9	90306-000001	Hexagon Flange Nut, M10 x 1.25, White Zinc	8
10	51002-000010	Dead Plate 2, Engine	1
11	51005-000007	Vibration Mount, Frame	4
12	90305-000010	Hexagon Flange Nut, M8, White Zinc	4
13	90001-000051	Hexagon Flange Bolt, M8 x 40, Black Zinc	3
14	90002-000002	Hexagon Flange Bolt, M10 x 1.25 x 40, White Zinc	4
15	90683-000006	Bushing, Ø15 x 27, White Zinc	3
16	51002-000009	Dead Plate 1, Engine	1
17	51014-000015	Vibration Mount, Support Leg,	2
18	51016-000004	Support Leg	1
19	90001-000019	Hexagon Flange Bolt, M6 x 12, Black Zinc	2
20	90001-000041	Hexagon Flange Bolt, M8 x 16, Black Zinc	2
21	44001-000003	Cover, Wheel Hub, PMS 109C	2
22	44110-000002	8in. Wheel, Yellow	2
23	44020-000003	Roll Pin, Ø16 x 89.5 x 98, Black Zinc	2
24	90722-000001	Plug, End	1
25	90501-000004	Pin, Black Zinc	2

WIRING DIAGRAM

