Specifications

Brookglen 2-Handle Deck-Mount Roman Tub Faucet

MODEL	SKU #	FINISH
HD461-8204	304368025	Brushed Nickel
HD461-8216	304367678	Oil Rubbed Bronze

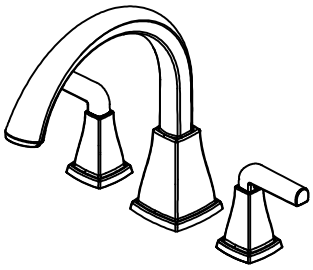

FEATURES

- Requires 3-Hole Sink with 8～16" On-Center
- 1/2" IPS Connections
- Min Flow Rate: 2.4 gpm (9 L/min) at 20 psi
- Max Countertop Thickness: 31/32"
- Spout Reach: 6 15/32"
- Spout Height: 8 1/16"
- 1/4 Turn Ceramic Valve for Lifetime Drip-free Operation
- With Zinc Lever Handles
- Recessed Rectifier

CODE COMPLIANCE

- IAPMO Certified: ASME A112.18.1/CSA B125.1
- ADA Compliant

Water Efficiency

WARRANTY

- Limited Lifetime Warranty

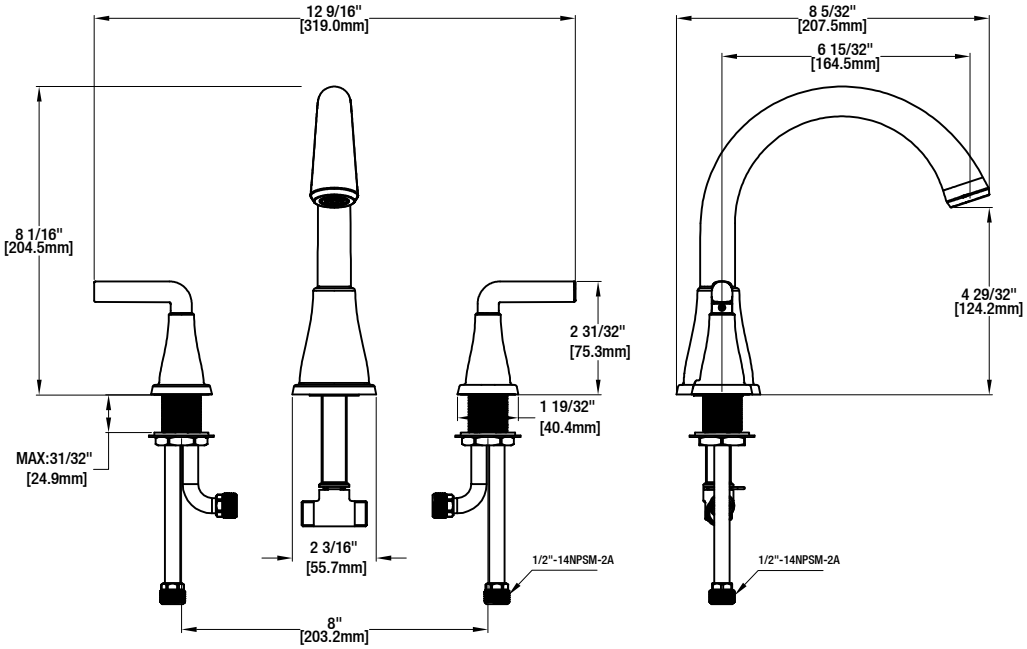

INSTALLATION DIMENSIONS

Glacier Bay reserves the right to make changes in specifications and materials and to change and discontinue models, both without notice or obligation.
Dimensions are for reference only.