

TOP VIEW

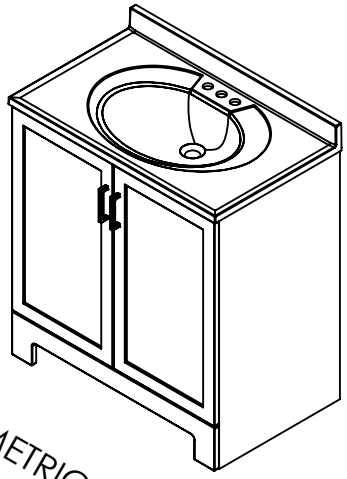

ISOMETRIC VIEW

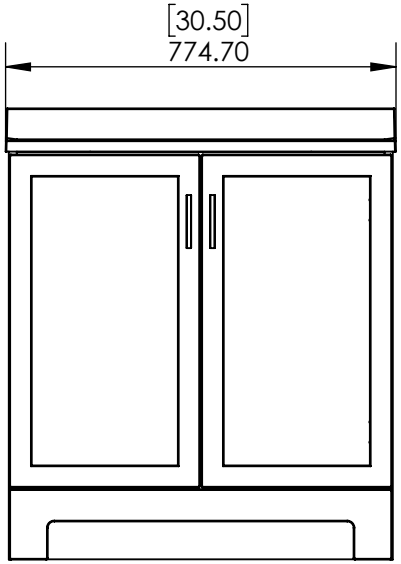

FRONT VIEW

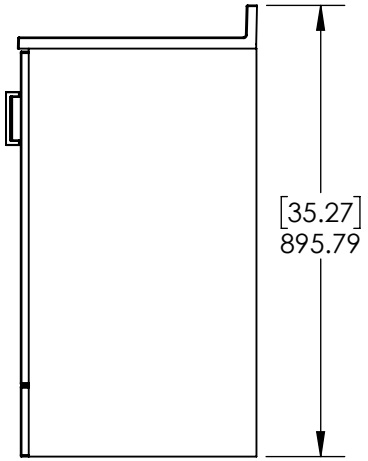

SIDE VIEW

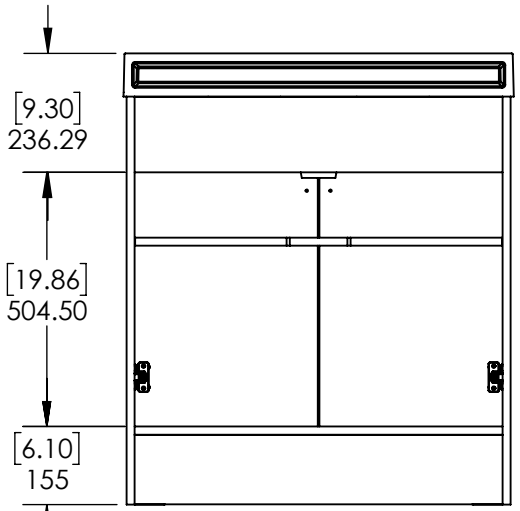

BACK VIEW

DWR	AG	03/03/25
REV	ING	
APR	R&D	

ITEM: **W079130P2**

REV **A**

NAME: W0791 30IN 2PC COMBO

MATERIAL: ----

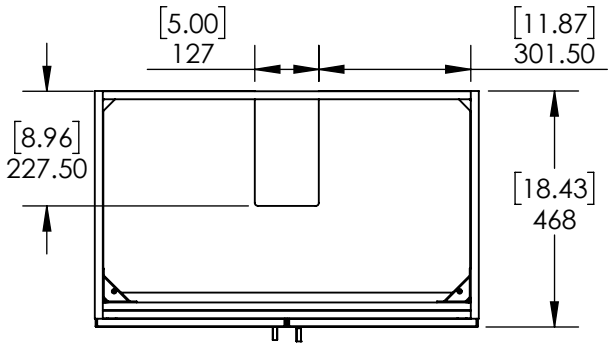

TOP VIEW

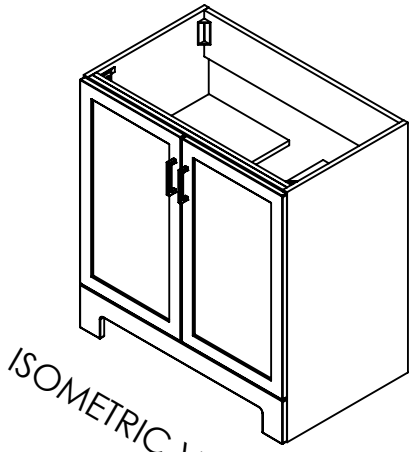

ISOMETRIC VIEW

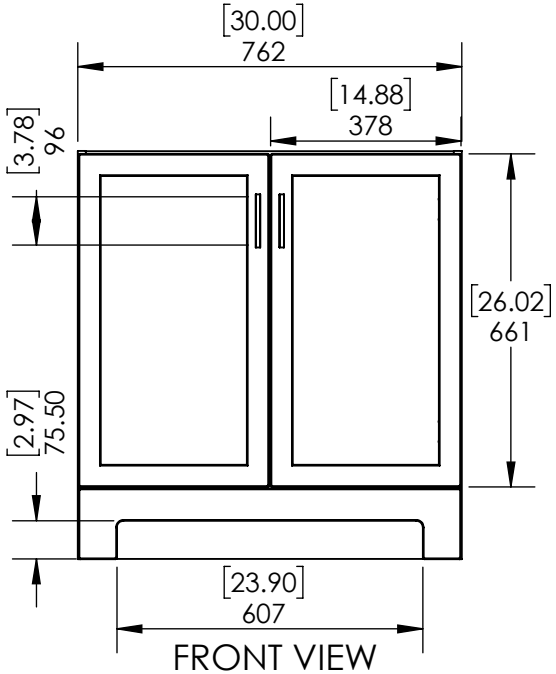

FRONT VIEW

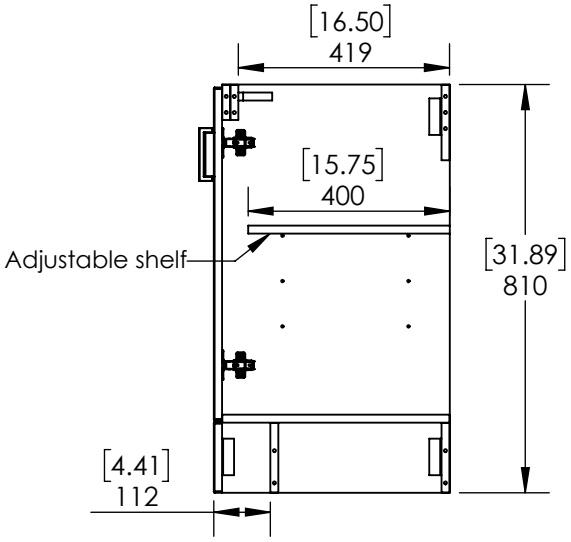

SIDE VIEW

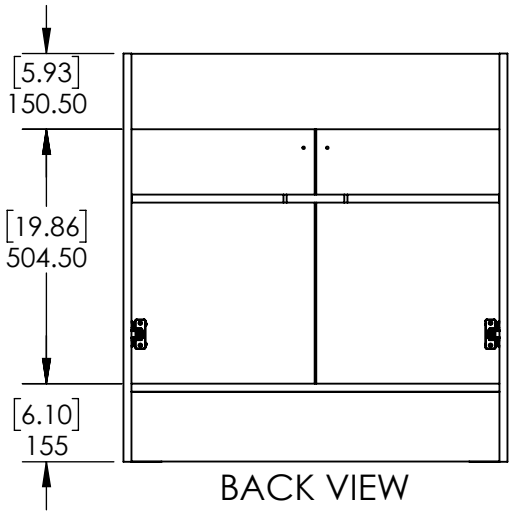

BACK VIEW

DWR	AG	03/03/25
REV	ING	
APR	R&D	

ITEM: **W079130P2**

REV **A**

NAME: W0791 30IN 2PC COMBO

MATERIAL: ----

ITEM ID	ITEM DESCRIPTION	TECHNOLOGY	STATUS
NPIB311904OC	Newport Blanco 31x19 en Fajilla (Combo)	Cultured Marble	FG

REV	DESCRIPTION	DATE	APPROVAL
0	RELEASED	04/16/20	O. Razo

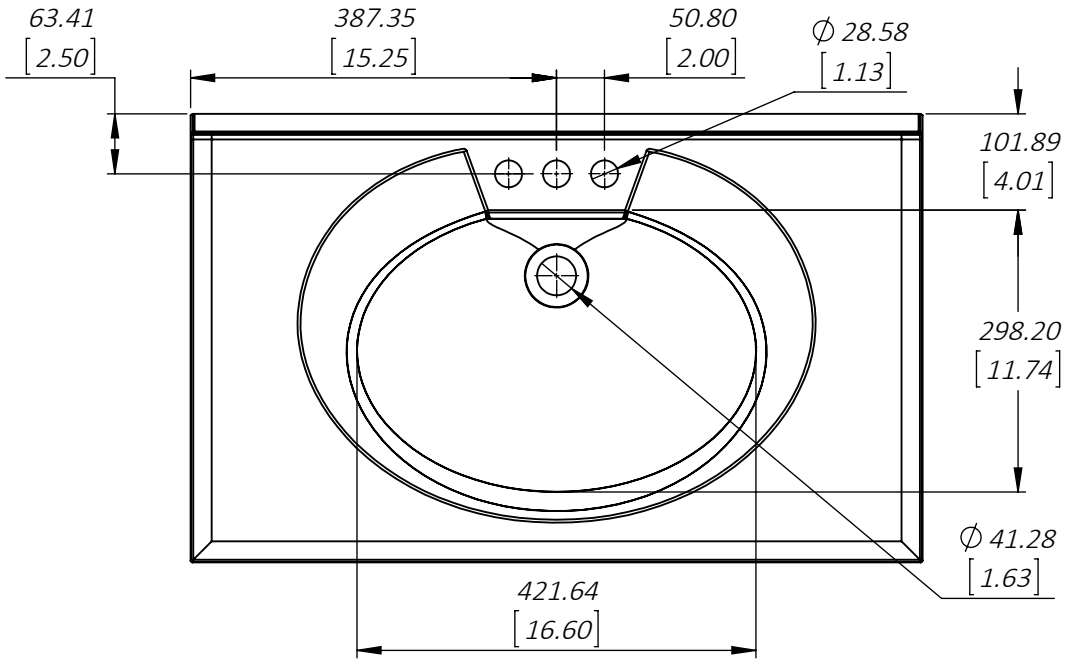

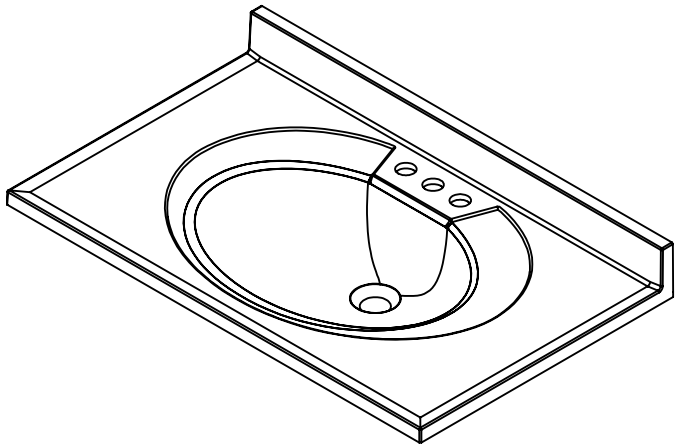

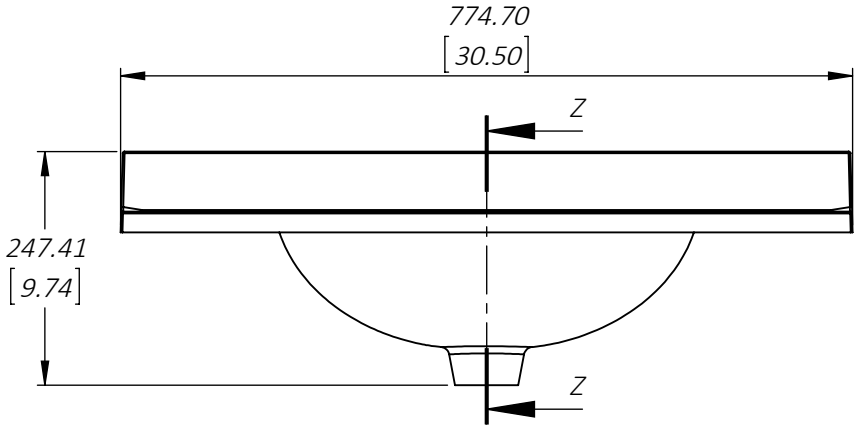

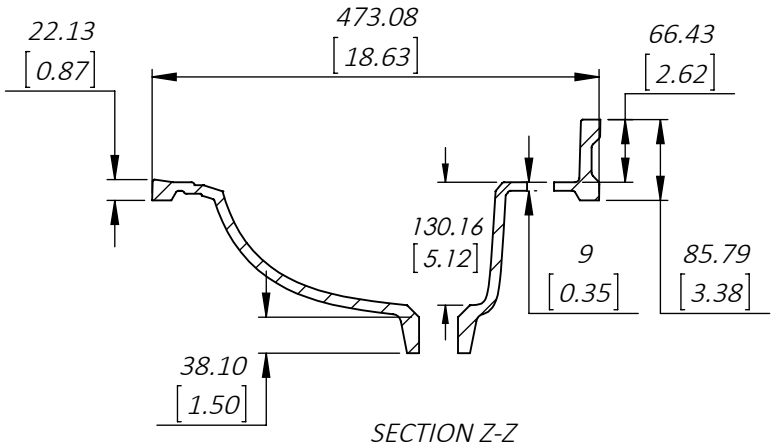

SECTION Z-Z
SCALE 1 : 8

PROPRIETARY AND CONFIDENTIAL

THE INFORMATION CONTAINED IN THIS DRAWING IS THE SOLE PROPERTY OF WOODCRAFTERS. ANY REPRODUCTION IN PART OR AS A WHOLE WITHOUT THE WRITTEN PERMISSION OF WOODCRAFTERS IS PROHIBITED.

UNLESS OTHERWISE SPECIFIED
DIMENSIONS ARE IN MM.
AND [INCHES]
TOLERANCES ARE
+ 3.175 [.125] - 3.175 [0.125]
SCALE:1:8

	NAME	DATE
DRAWN	O. Razo	05/11/2020
CHECKED	O. Razo	04/16/2020
ENG APPR.	W. Amaya	04/16/2020
MFG APPR.	A. Casiano	04/16/2020

SIZE A | DWG. NO. FG: 595044 | SHEET 1 OF 1