GLACIER BAY®

USE AND CARE GUIDE

UNDERMOUNT STAINLESS STEEL KITCHEN SINK

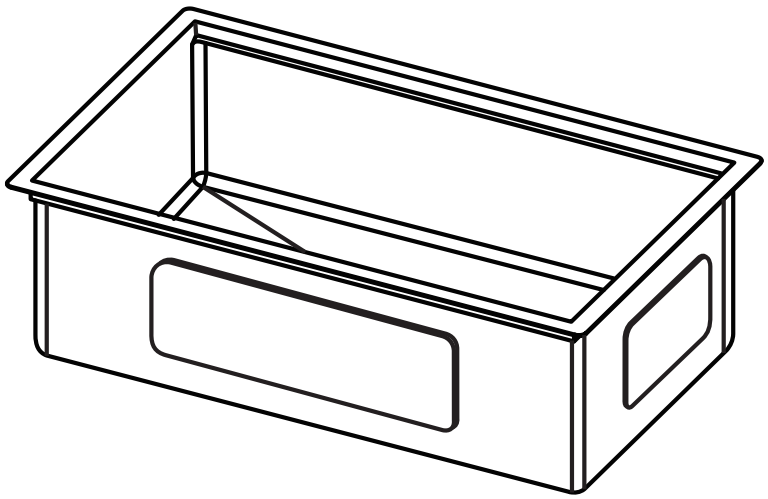

Model#ACS3219A1-FW

Questions, problems, missing parts? Before returning to the store,
call Glacier Bay Customer Service
8 a.m. – 7 p.m., EST, Monday-Friday, 9 a.m. – 6 p.m., EST, Saturday

1-855-HD-GLACIER

HOMEDEPOT.COM/GLACIERBAY

THANK YOU

We appreciate the trust and confidence you have placed in Glacier Bay through the purchase of this kitchen sink. We strive to continually create quality products designed to enhance your home. Visit us online to see our full line of products available for your home improvement needs. Thank you for choosing Glacier Bay!

Table of Contents

Safety Information 2
Warranty 2
Pre-Installation 3
Undermount Installation 5
Care and Maintenance 7

Safety Information

Before installing this sink, read this instruction manual carefully. It contains important information concerning the safe installation, operation, and maintenance of your sink.

Retain this manual for future use. In the event of a sale, transfer, or relocation, ensure this manual remains with the sink.

NOTICE: Avoid leaving wet sponges, salt, and corrosive substances on the sink for long periods of time. Lines and scratches may be caused by improper use of the sink.

NOTICE: Do not place the sink on its side as there is a risk of damage.

WARNING: Keep all the packaging materials out of the reach of children to prevent possible choking or suffocation.

WARNING: Use caution when installing the sink. There is a risk of crushing your fingers when inserting the sink into the installation location.

CAUTION: Never place hot objects such as hot pans on the sink. Wait until the object has cooled or use a heat resistant plate when placing hot objects on the sink surface.

Warranty

LIMITED LIFETIME WARRANTY

This limited lifetime warranty is extended to the original purchaser of this sink. The manufacturer warrants this sink to be free from all manufacturing defects in material and workmanship. The manufacturer will repair or replace, at no charge, excluding labor, any sink that is proven to be defective under normal use. An equivalent replacement will be issued to the original owner provided the defective sink was installed in accordance with the installation procedures, used and cleaned as recommended, and not damaged due to abuse, misuse, or negligence. Chips, scratches, and stains are not deemed to be manufacturing defects. The manufacturer will not be held liable for chips, scratches, and stains that can occur under normal use over a period of time. Please refer to the cleaning instructions to maintain your sink in its original appearance. The manufacturer shall not be held liable under this warranty where the sink has been used in a non-domestic application, improperly installed, or damaged from the impact caused by a heavy object being dropped on the sink of from improper handling.

The manufacturer shall not be liable for any inconvenience or expense for material or labor related to the removal or replacement of a defective sink or for any loss or damage to any person or property whatsoever resulting from the defective sink. All transportation costs to and from the point of purchase will be the responsibility of the purchaser.

Any sink returned must be in the original packaging and include all the accompanying accessories, parts, and documentation. The manufacturer reserves the right to inspect any sink reported to be defective prior to replacement of the sink.

WARRANTY EXCLUSIONS

Excluded are any accessories that accompany the sink (strainer, bottom grid, etc.). The manufacturer guarantees all sink accessories to be free from manufacturing defects for one year. The manufacturer is not responsible or liable for indirect, special, or consequential damages arising out of or in connection with the use or performance of its products and its liability under this warranty is limited to the replacement of the defective material at the location of purchase.

The original dated sales receipt must be retained by the customer and is the only acceptable proof of purchase. The manufacturer makes no additional warranties, express or implied, and any implied warranty including that of merchantability or fitness for a particular purpose is limited in its duration to the duration of the written limited warranties set forth herein.

OBLIGATION OF THE ORIGINAL OWNER

No employee, agent, or other person is authorized to provide any warranty on behalf of The Home Depot for a Glacier Bay product that is in addition to or different from the warranty stated above unless the warranty has been previously approved by an authorized representative. This warranty gives you specific legal rights and you may also have other rights which may vary from province to province.

Contact the Customer Service Team at 1-855-HD-GlACIER or visit www.HOMEDEPOT.COME/GLACIERBAY.

Pre-Installation

PLANNING INSTALLATION

Compare all the parts to the Hardware Included and Package Contents lists and verify that all the parts are included. Inspect all the parts for damage. If there are missing parts or visible damage to the sink, do not install and contact the Customer Service Team at 1-855-HD-GLACIER.

TOOLS REQUIRED

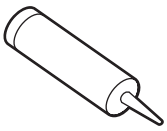
Silicone sealant


Safety goggles


Phillips screwdriver

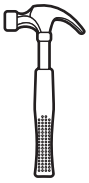
Hammer

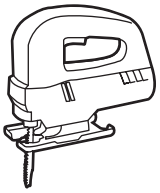
Jigsaw


Drill and drill bit



Plumber's putty

HARDWARE INCLUDED

NOTE: Hardware is not shown to actual size.

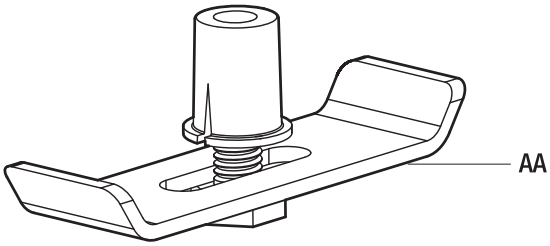

Part	Description	Quantity
AA	Undermount clip	10

Pre-Installation (continued)

PACKAGE CONTENTS

Model#	Bowls	Picture	Package Contents
ACS3219A1-FW	Single	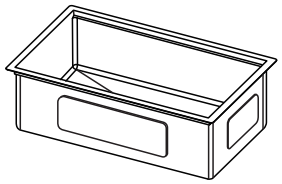	. Sink . Cut-Out Template . Mounting Hardware . Strainer . Bottom Grid . Roll Mat . Colander . Cutting Board . Towel . Faucet

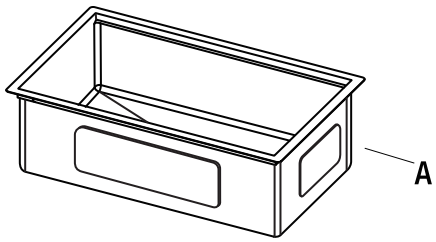



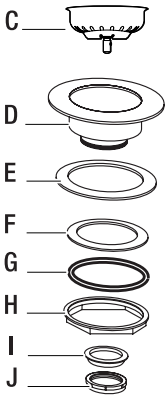

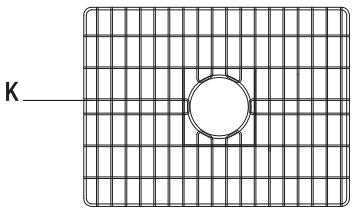

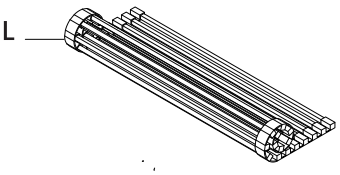

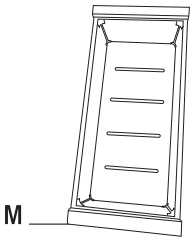

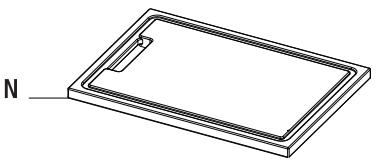



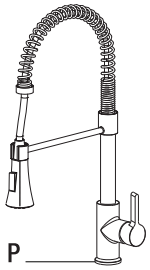

Part	Description
A	Sink
B	Undermount cut-out template
C	Stainer basket
D	Stainer bowl
E	Stainer ring
F	Paper washer
G	Rubber washer
H	Locknut
I	Plastic joint
J	Connecting nut
K	Bottom grid
L	Roll mat
M	Colander
N	Cutting board
O	Towel
P	Faucet

Undermount-Installation

1 Preparing the installation location

NOTICE: It is strongly suggested that you contact a professional countertop fabricator when installing the sink as an undermount.

- ☐ Provide appropriate clearance for the faucet, the water supply lines, the drain assembly, the garbage disposal and the structural parts of the cabinet.
- ☐ If your sink does not already have an existing installation location, place the cut-out template (B) on the sink installation location and trace the locations to cut out.
- ☐ Cut out the location for the sink.

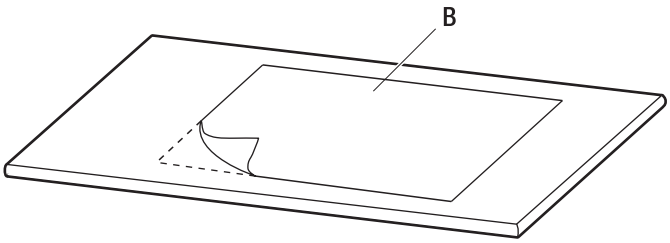

2 Installing the sink

- ☐ Locate and drill the mounting holes, following the countertop manufacturer's instructions. The holes should allow even spacing of the mounting brackets around the sink (A).
- ☐ With the countertop inverted (upside down), fasten the mounting brackets to the countertop loosely.
- ☐ Clean the bottom of the countertop and the top flange (or lip) of the sink (A).
- ☐ Apply a narrow bead of silicone adhesive sealant (not included) evenly all around the top of the sink flanges.
- ☐ Position and align the sink over the countertop opening. Press the silicone onto the countertop.
- ☐ Tighten the fasteners until the mounting brackets are snug against the sink. Check the alignment of the sink to the countertop opening.
- ☐ Tighten the fasteners evenly. Be careful not to over-tighten.
- ☐ Immediately remove any excess sealant.

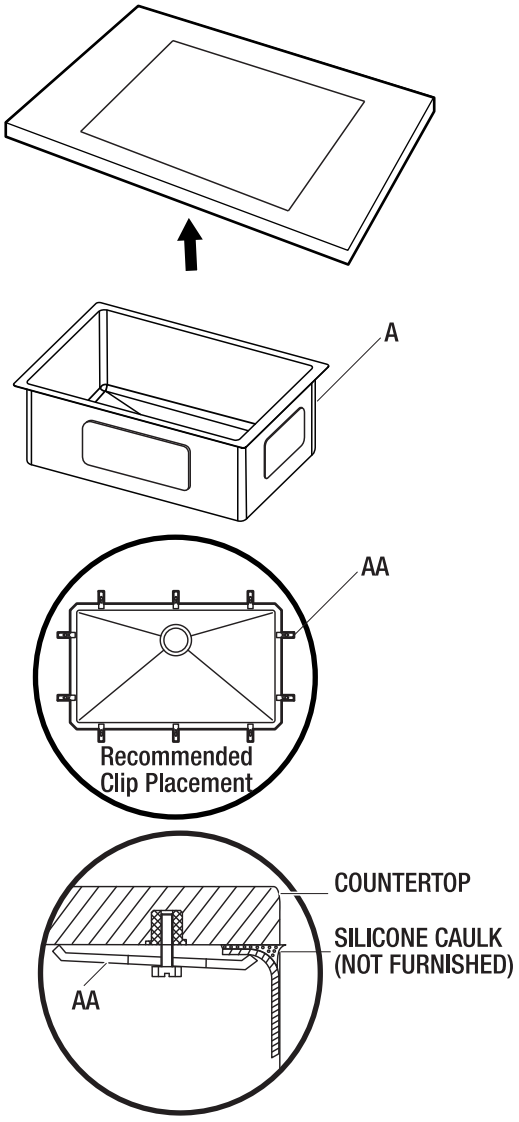

Undermount-Installation

3 Installing the drain assembly

- ☐ Place the sink (A) into the installation hole to verify the fit. Adjust the cutout if necessary.
- ☐ Install the strainer assembly (C-J) as these steps describe. It is easier to install the strainer assembly (C-J) to the sink (A) before the sink is installed to the cabinet.
  1) Apply a small amount of plumber's putty (not included) in the notch around the drain hole of the sink (A). Place the strainer ring (E) on top of the drain hole in the sink (A).
  2) Put strainer basket (C) into the strainer bowl (D) and place this assembly into the drain hole in the sink (A).
  3) From underneath the sink (A), place the paper washer (F), rubber washer (G), locknut (H), plastic joint (I), and connecting nut (J) under the drain hole in the sink (A).
  4) Tighten the locknut (H) to hold the strainer assembly securely in place.

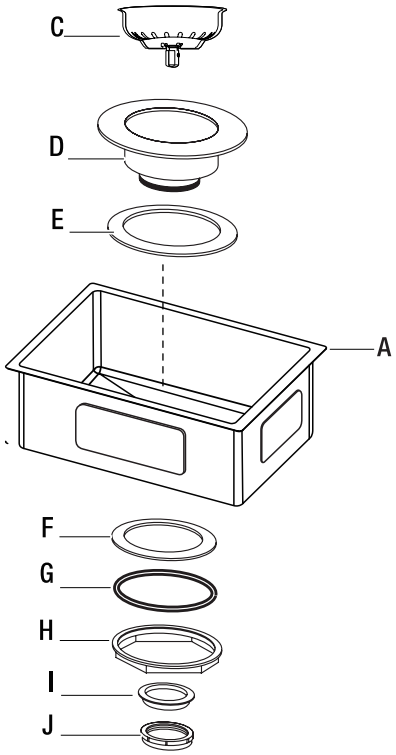

4 Putting on the grid

- ☐ Place the bottom grid (K) into the sink (A).
- ☐ If you have a double bowl sink, install the assembly and put on the grid in the same way for the second bowl.

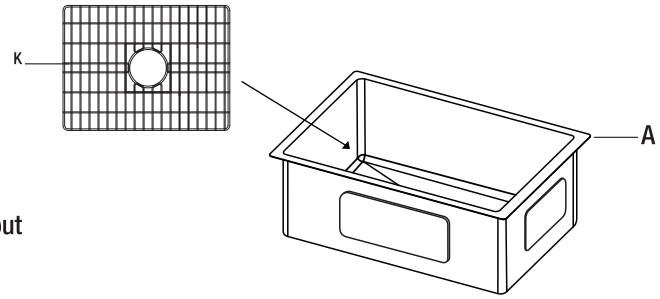

Undermount-Installation

5 Putting on the accessories (workstation sinks only)

☐ For workstation sinks (A), place the cutting board (N), the colander (M) and the roll mat (L) on the sink (A) or countertop directly.

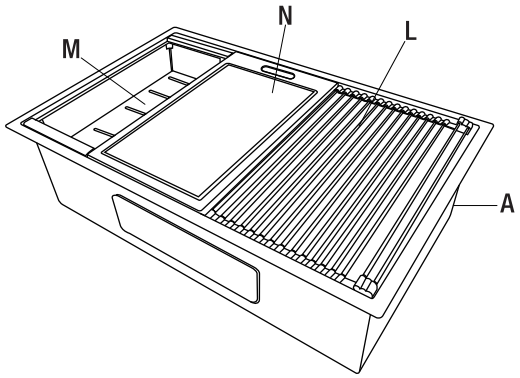

Care and Maintenance

☐ Do not use abrasive cleaning creams or powders, concentrated caustic soda, formic acid, or anything highly corrosive. For more information on removing difficult stains, contact customer service at 1-855-HD-GLACIER or visit your local Home Depot store.

☐ Clean with a sponge or soft dish cloth and gentle sink soap. For stains that are difficult to remove, such as calcium deposits, use eraser sponges, vinegar-based cleaners, and lime removers.

☐ Rinse the sink with hot water and dry the sink with a soft absorbent cloth.

☐ Fruit juices, coffee, and tea can stain the surface of your sink if not removed. Rinse or wipe the sink promptly after these substances make contact with the sink.

☐ Never use steam or high-pressure cleaning systems to clean your sink.

GLACIER BAY®

Questions, problems, missing parts? Before returning to the store,
call Glacier Bay Customer Service
8 a.m. – 7 p.m., EST, Monday-Friday, 9 a.m. – 6 p.m., EST, Saturday

1-855-HD-GLACIER

HOMEDEPOT.COM/GLACIERBAY

Retain this manual for future use.