COOL BOSS™

5240 Willis Rd.
Theodore, AL 36582 USA
Toll Free: 1 (855) 223-2665
Tel: 1 (805) 933-9970
coolboss.com

Cool Boss™ Portable Evaporative Air Cooler

Installation and Operation Manual

Manual Revision A2 — May 2022 — Manual P/N 5900271

Models:

- CB-16L / H
- CB-28L / H
- CB-36L / H



DANGER

Read the *entire* contents of this manual ***before*** using this product. Failure to follow the instructions and safety precautions in this manual can result in serious injury or death. Make sure all other operators also read this manual. Keep the manual near the product for future reference. ***By proceeding with setup and operation, you agree that you fully understand the contents of this manual and assume full responsibility for product use.***

Manual. Cool Boss™ Portable Evaporative Air Cooler, *Installation and Operation Manual*, P/N 5900271, Manual Revision A2, May 2022.

Copyright. Copyright © 2022 by BendPak Inc. All rights reserved. No part of this manual can be reproduced, adapted, translated, or transmitted by any means, electronic or mechanical, for any purpose or in any form, without prior written permission of BendPak Inc.

Trademarks. Cool Boss, the Cool Boss logo, and BendPak are trademarks of BendPak Inc. All other company, product, and service names are used for identification only. All trademarks and registered trademarks mentioned in this manual are the property of their respective owners.

Limitations. Every effort has been made to ensure complete and accurate instructions are included in this manual. However, product updates, revisions, and/or changes may have occurred since this manual was published. BendPak reserves the right to change any information in this manual without incurring any obligation for equipment previously or subsequently sold. BendPak is not responsible for typographical errors in this manual.

Warranty. The Cool Boss warranty is more than a commitment to you: it is also a commitment to the value of your new product. Visit **www.coolboss.com/warranty** for complete warranty information.

Safety. Your new product was designed and manufactured with safety in mind. Your safety also depends on proper training and thoughtful operation. Do not set up, operate, maintain, or repair your Cool Boss without reading and understanding this manual and the labels on the unit.

Owner Responsibility. In order to maintain your product properly and to ensure operator safety, it is the responsibility of the product owner to read and follow these instructions:

- Follow all setup, operation, and maintenance instructions.
- Make sure product setup conforms to all applicable local, state, and federal codes, rules, and regulations, such as state and federal OSHA regulations and electrical codes.
- Read and follow all safety instructions. Keep them readily available for operators.
- Make sure all operators are properly trained, know how to safely operate the unit, and are properly supervised.
- Do not operate the product until you are certain that all parts are in place and operating correctly.
- Carefully inspect the product on a regular basis and perform all maintenance as required.
- Service and maintain the unit only with approved replacement parts.
- Keep all instructions permanently with the product and make sure all labels are clean and visible.

Unit Information. Enter the Model Number, Serial Number, and Date of Manufacture from the label on your unit. This information is required for part or warranty issues.

Model: _____

Serial: _____

Date of Manufacture: _____

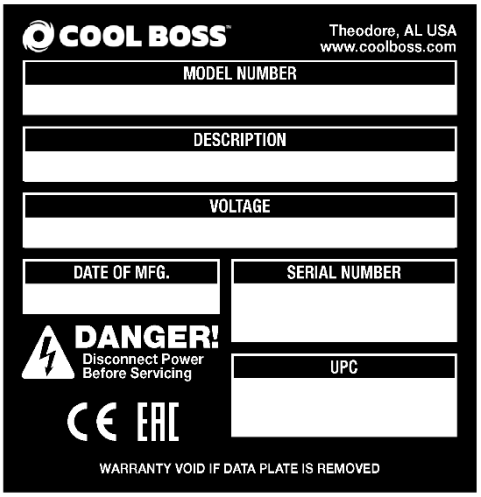

Table of Contents

Introduction 3
Shipping Information 4
Safety Considerations 4
Frequently Asked Questions 6
Specifications 7
Components 9
Setup 13
Operation 23
Maintenance 28
Troubleshooting 31
Parts Diagram 33
Labels 36
Maintenance Log 39

Introduction

This manual describes the three models of the Cool Boss Portable Evaporative Air Cooler, which keeps your shop or workplace cool and comfortable on even the hottest summer days.

The Cool Boss models described here feature an Amplified speaker pair with Bluetooth® input for streaming audio from smart devices.

This manual addresses three models with fan diameters of 16, 28 and 36 inches. Each model may be ordered in a 110 VAC or a 220 VAC version:

- **CB-16L:** 110 VAC, 60Hz, 1 Ph. Power
- **CB-16H:** 208–230 VAC, 50/60Hz, 1 Ph. Power
- **CB-28L:** 110 VAC, 60Hz, 1 Ph. Power
- **CB-28H:** 208–230 VAC, 50/60Hz, 1 Ph. Power
- **CB-36L:** 110 VAC, 60Hz, 1 Ph. Power
- **CB-36H:** 208–230 VAC, 50/60Hz, 1 Ph. Power

All three Cool Boss units described here operate identically and will be referred to as Cool Boss or cooler throughout this manual. Any differences based on the selected power supply or function, will be called out in the text by the unit's specific model number.

This manual is mandatory reading for all users of the Cool Boss, including anyone who sets up, operates, maintains, or repairs it.

⚠ **DANGER** Be very careful when setting up, operating, maintaining, or repairing this equipment; failure to do so correctly could result in property damage, product damage, injury, or (in very rare cases) death. Make sure only authorized personnel operate this equipment. All repairs must be performed by an authorized technician. Do not make modifications to the unit; this voids the warranty and increases the chances of injury or property damage. Make sure to read and follow the instructions on the labels on the unit.

Keep this manual on or near the equipment so that anyone who uses or services the unit can read it.

Assistance with your Cool Boss is available from your dealer, by calling Cool Boss at **(805) 933-9970**, or by emailing **support@coolboss.com**. You may also contact Cool Boss for parts replacement (please have the serial number and model number of your unit available).

Shipping Information

Your equipment was carefully checked before shipping. Nevertheless, you should thoroughly inspect the shipment ***before*** you sign to acknowledge that you received it.

When you sign the bill of lading, it tells the carrier the items on the invoice were received in good condition. *Do not sign the bill of lading until **after** you have inspected the shipment.* If any of the items listed on the bill of lading are missing or are damaged, do not accept the shipment until the carrier makes a notation on the bill of lading that lists the missing and/or damaged goods.

If you discover missing or damaged goods ***after*** you receive the shipment and have signed the bill of lading, notify the carrier at once and request the carrier to make an inspection. If the carrier will not make an inspection, prepare a signed statement to the effect that you have notified the carrier (on a specific date) and that the carrier has failed to comply with your request.

It is difficult to collect for loss or damage after you have given the carrier a signed bill of lading. If this happens to you, file a claim with the carrier promptly. Support your claim with copies of the bill of lading, freight bill, invoice, and photographs, if available. Our willingness to assist in helping you process your claim does not make us responsible for collection of claims or replacement of lost or damaged materials.

Safety Considerations

Read this manual carefully before using your new product. Do not set up or operate the product until you are familiar with all operating instructions and warnings. Do not allow anyone else to operate the product until they are also familiar with all operating instructions and warnings.

⚠ **WARNING** **California Proposition 65**. This product can expose you to chemicals including styrene and vinyl chloride which are on a list of over 900 chemicals identified by the State of California to cause birth defects or reproductive harm. ALWAYS use this product in accordance with Cool Boss BendPak's instructions. For more information go to **www.P65Warnings.ca.gov**.

Safety Information

- The product is an air-cooling device. Use it only for its intended purpose.
- The product should only be operated by authorized personnel. Children should **not** be allowed operate the Cool Boss. Make sure all operators read and understand the Warning labels and the *Installation and Operation Manual*. Keep the manual near the device at all times.
- **Never** operate the Cool Boss with a damaged Power Cord or Plug.
- When the product is in use, keep all body parts away from it.
- Only use the product indoors in a well-ventilated area. Ensure a window or door is open to allow adequate air flow.

- Do not make any modifications to the product. This voids the warranty and increases the chances of injury or property damage.
- Avoid using an extension cord; they can overheat. If you must use an extension cord, make sure it is a three conductor No. 14 AWG minimum with a three prong plug/receptacle and does not exceed 50-feet in length. For 100-foot extensions cords use 12 AWG minimum.
- Do not spray the outside of the unit with water. Moisture can harm the motor and other parts of the electrical system.
- Only connect the power cord to a grounded, three-prong GFCI protected receptacle.
- Lock at least two Casters before turning on the fan.
- Make a visual inspection of the product before using it. Check for damaged or missing parts. ***Do not use the product if you find problems with the unit***. Instead, remove it from service, then contact your dealer, call Cool Boss at **(805) 933-9970**, or email Cool Boss at **support@coolboss.com**.
- Do ***not*** operate the Cool Boss if the fan has cracked or damaged blades.
- Do ***not*** operate the Cool Boss unless the Media is securely in place.
- Do ***not*** operate the Cool Boss within 35-feet (10.6 m) of an open flame or spark.
- Do ***not*** operate the Cool Boss if the GFCI does not remove power when the Test button is pressed.
- ***Always*** remove the plug from the electrical receptacle by pulling on the plug not the power cord.
- BendPak recommends making a thorough inspection of the product at least once a year. Replace any damaged or severely worn parts, decals, or warning labels.

Save these instructions!

Symbols

Following are the symbols used in this manual:

⚠ **DANGER**	Calls attention to an immediate hazard that **will** result in death or severe injury.
⚠ **WARNING**	Calls attention to a hazard or unsafe practice that **could** result in death or severe personal injury.
⚠ **CAUTION**	Calls attention to a hazard or unsafe practice that could result in minor personal injury, product, or property damage.
Tip	Calls attention to information that can help you use your product better.

Liability Information

BendPak Inc. assumes **no** liability for damages resulting from:

- Use of the equipment for purposes other than those described in this manual.
- Modifications to the equipment without prior, written permission from BendPak Inc.
- Injury or death caused by modifying, disabling, overriding, or removing safety features.
- Damage to the equipment from external influences.
- Incorrect operation of the equipment.

Frequently Asked Questions

Question: Is the Cool Boss an air conditioner?

Answer: No. it is an evaporative air cooler, sometimes called a swamp cooler. The fan pulls in hot outdoor air, a water drip spray system releases water into a Media, the water droplets evaporate when they meet the hot air, lowering the air temperature by up to 26°F, and the fan blows the cooled air in the desired direction.

Q: How much air does the Cool Boss cool?

A: Each unit can cool approximately:

Model	Airflow	Cooling Area
CB-16L / H	4,950 cfm / 140 cmm	1,125 ft^2 / 104.5 m^2
CB-28L / H	9,020 cfm / 255 cmm	2,125 ft^2 / 197 m^2
CB-36L / H	12,615 cfm / 357 cmm	3,125 ft^2 / 290 m^2

Q: What's the best way to set up my Cool Boss?

A: With the back of the unit facing a source of hot, dry air – which is what the Cool Boss will cool—and the front facing the area you want to keep cool. It will need to be near a power source also. And remember, it is portable. So you can move it to where you need it; it does not have to stay in the same place the whole time.

Q: Does it require special water?

A: No. Clean, ordinary tap water.

Q: Is it hard to control the Cool Boss?

A: Not at all. There a few, easy-to-understand controls on the unit. It also comes with a remote control, so that you can turn it on or off or change settings from wherever you happen to be.

Q: What about maintenance?

A: Very little. Basically, keep the Water Reservoir filled with clean tap water and clean the Media once in a while. Dirt and other pollutants from the environment accumulate in the Media and the Reservoir, so it is best to clean it every so often. Do not clean the Media by spraying it with high pressure water while installed in the Cool Boss! Instead, remove the Media using the procedure in the **Installing the Media section**, then clean it as per the procedure found there.

Q: Anything else I should know about my Cool Boss?

A: A ducting kit is available for the CB-16L/H only. This kit attaches to the Fan outlet, allowing you to direct and concentrate the cooling to exactly the right spot.

Q: Can I charge my phone on the USB port?

A: Yes, the Cool Boss USB port is a charge only port. No data.

Q: Can I stream music from my phone to the Cool Boss speakers?

A: Yes, the Cool Boss will pair with smart devices via Bluetooth® as long as your device is compatible with Bluetooth v5.0 and within ≈30 ft. / 9 m. Be aware that Bluetooth range may be reduced by obstacles (e.g., walls, people, and machines.) Electromagnetic interference from equipment or other Bluetooth devices will also negatively impact the actual Bluetooth range.

Specifications

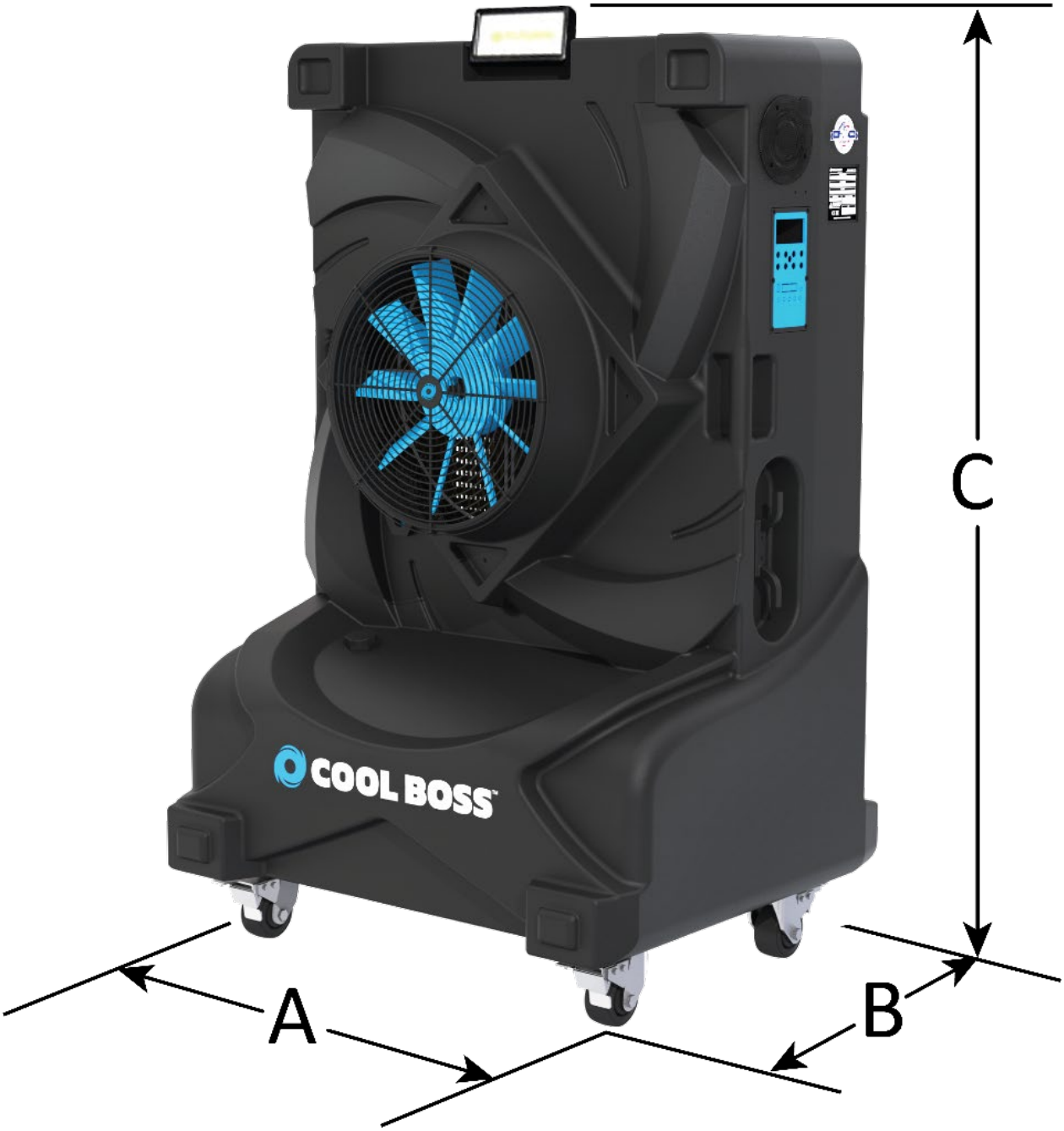

Model	CB-16L / H	CB-28L / H	CB-36L / H
Dimensions (A x B x C)	41in. x 34 in. x 66.5 in. 1,040 mm x 860 mm x 1,689 mm	52 in. x 37 in. x 76.5 in. 1,330 mm x 946 mm x 1,943 mm	65 in. x 44 in. x 85 in. 1,650 mm x 1,117 mm x 2,159 mm
Fan diameter	16" / 406 mm	28" / 711 mm	36" / 914 mm
Weight Empty	200 lbs. / 91 kg	275 lbs. / 125 kg	400 lbs. / 181 kg
Weight Full	698 lbs. / 317 kg	939 lbs. / 426 kg	1,355 lbs. / 615 kg
Water capacity	60 gal. / 227 liters	80 gal. / 303 liters	115 gal. / 435 liters
Maximum airflow	4,950 ft^3/min. 140 m^3/min.	9,020 ft^3/min. 255 m^3/min.	12,615 ft^3/min. 357 m^3/min.
Sound level	75 to 100 dB	60 to 100 dB	70 to 90 dB
UL® Certified	Yes	Yes	Yes
Fan RPM	1,700	1,100	850
Maximum Power Amperage/Watts	10.7A / 1,120W	10.1A / 1,088W	10.9A / 1,137W
Motor Power Watts / Horse Pwr.	670W / 0.9HP	638W / 0.85HP	687W / 0.92HP
Power Source	**CB-XXL**: 110 VAC, 60 Hz, 15A, single phase. **CB-XXH**: 208 to 230 VAC, 50-60 Hz, 15A, single phase.		
Power Cord	15 feet / 4.5 m with GFCI		
Water Pressure	≈72.5 psi / 0.5 MPa Max. Automatic Water Source Shutoff.		
Water Source Shutoff	The Cool Boss utilizes a Mechanical Float Valve to automatically shut off the Water Source before exceeding maximum Fill.		
Fan speed	Variable in 10 speed increments		
Fan type	Axial		
Controls	Manual pushbutton membrane panel with digital LED display or remote control.		
LED Floodlight	80W, 4000 lumens		
Housing	Antibacterial		
Bluetooth® 5.0	Compatible with Bluetooth® v5.0		
USB	USB port is available for charging devices only. USB 2.0 specification .5 A at 5 V		

Components

The Cool Boss Unit

CB-16 pictured below.



This figure shows the interior of the unit, from the back (intake side).

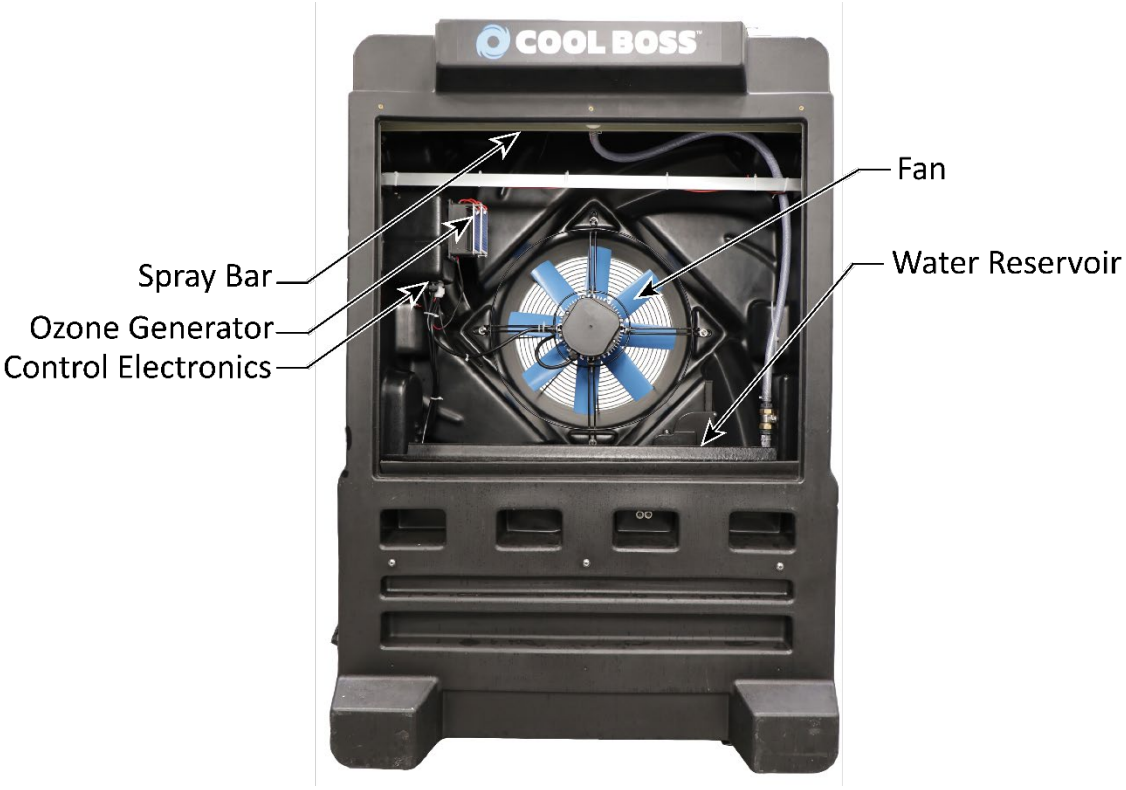



The Cool Boss Control Panel

The figure below details the Control Panel.

Status Display

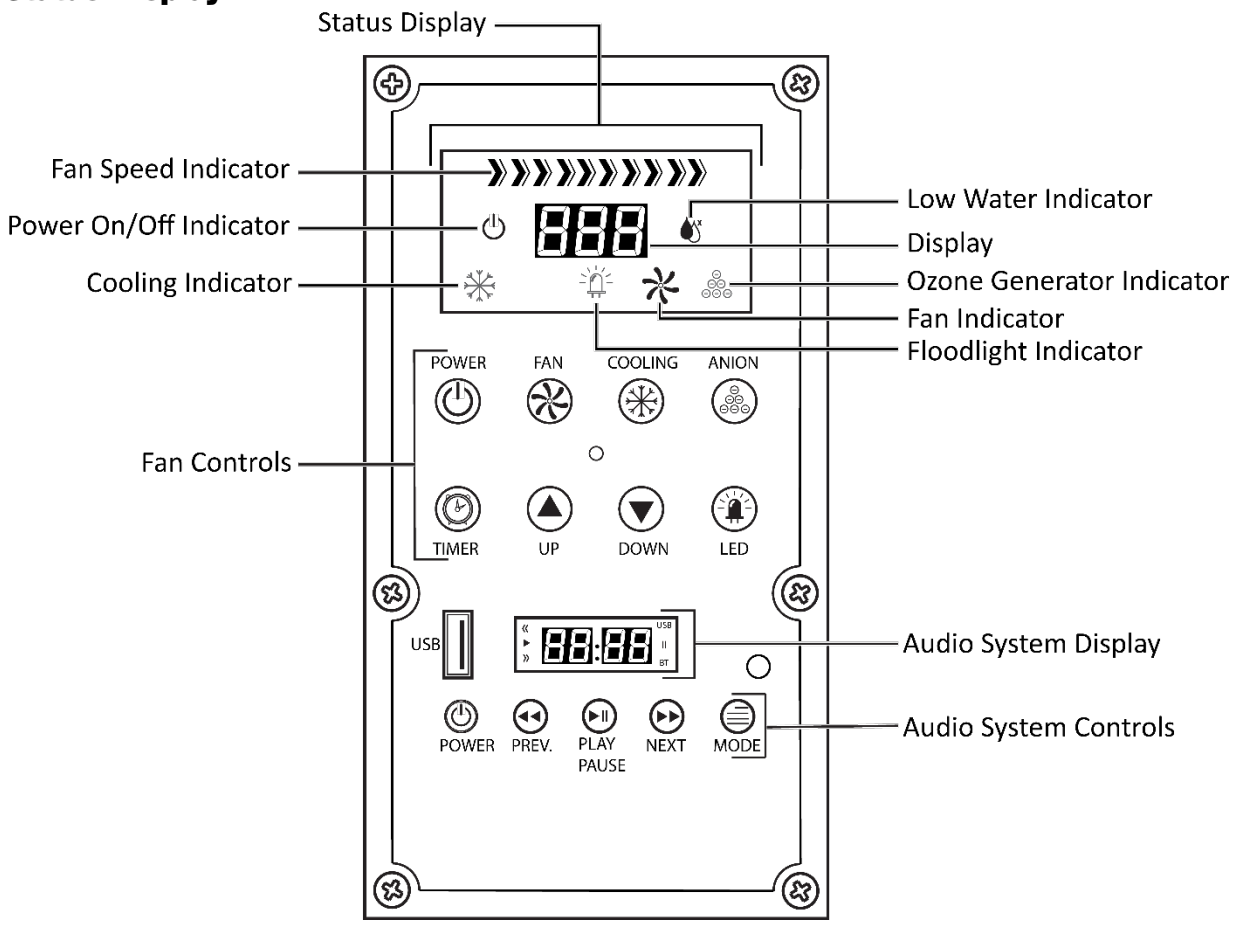

The Control Panel's Status Display provides the on-off status of the Cool Boss functions, the fan power settings as a percentage, current temperature of the air in ˚F at the Cool Boss Fan, the timer status and a low water warning.

Control Functions

Power – Push on-off. Applies power to the Cool Boss.

Fan – Push on-off. Applies power to the Fan.

Cooling – Push on-off. Applies power to the Pump which provides water to the Spray Bar over the Media.

Ozone Generator – Push on-off. Applies power to the Ozone Generator.

⚠ **WARNING** ***Ozone generators are to be operated in unoccupied spaces only***. This device is not intended to produce Ozone while personnel or pets are present.

Timer – Push to scroll through preprogramed shutdown times. Allows the operator to select an automatic shutdown time in 1 hour increments. Up to 12 Hours maximum.

Up – Push to increase the Fan speed.

Down – Push to decrease the Fan speed.

LED – Push on-off. Applies power to the LED Floodlight located the top of the Cool Boss.

⚠ **CAUTION** **Never** push the buttons on the Control Panel or the Remote Control with anything sharp (e.g. screwdrivers, pens or a knife). Sharp objects can puncture the membrane creating a malfunction requiring repairs not covered under warranty.

Audio System Display

This display identifies the current audio input, active commands and the current audio file time.

Audio System Controls

Power ⏻ – Push on-off. Applies power to the Cool Boss Audio.

Play Pause ⏵⏸ – Push to begin playback or pause of the current audio file.

Prev. ⏮ – Skips back to the previous audio file.

Next ⏭ – Skips forward to the next audio file.

Mode ☰ – Not used on these models.

Volume – Manual volume control. Turn clockwise to increase volume, turn counterclockwise to decrease volume.

Remote Control

The figure below details the remote control and identifies the control functions as defined above. The remote will be found in the box with the Casters. The Remote Control requires two (2) AAA 1.5 Volt Batteries. (Batteries are **not** included with the Cool Boss.)

Important: The Remote utilizes infra-red light to communicate with the Cool Boss. Remote must be within 32 ft. / 10 m and have a direct line-of-sight to the Control Panel.

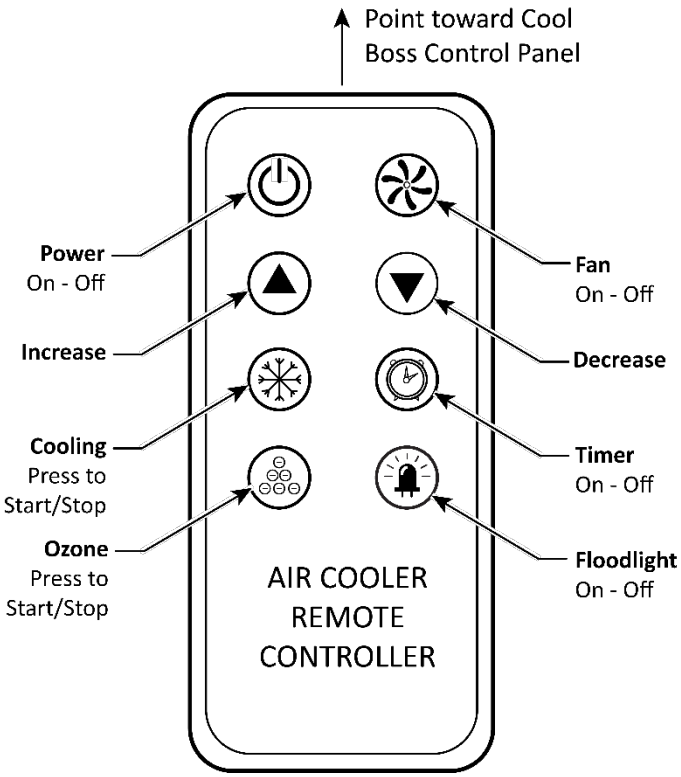

Setup

There are six basic steps in the Cool Boss set up.

1. Unbox.
2. Install the Casters.
3. Install the Media.
4. Determine the Cool Boss location.
5. Fill the reservoir or connect to water.
6. Connect to power.

Tools required for Assembly:

- Hammer
- Pry Bar
- Phillips Screwdrivers
- Metric Open End Wrench Set
- Two (2) AAA 1.5 V Batteries

Unboxing the Cool Boss

The Cool Boss Cooler is carefully packaged to prevent damage. Exercise care in removing the Cooler from its packaging.

⚠ **WARNING** Be careful not to injure yourself on sharp edges or fasteners.

⚠ **WARNING** You must wear the proper protective equipment at all times during setup and assembly of this Cooler: leather gloves, steel-toed boots, and back belts.

To unbox the Cooler:

1. Use a hammer and pry bar to **carefully** remove the shipping container from around the Cool Boss.
2. Position the Cooler with its back side down to provide access to the bottom of the unit. The back of the shipping container may be used to provide a clear, clean area to work on the Cooler. See figure below.

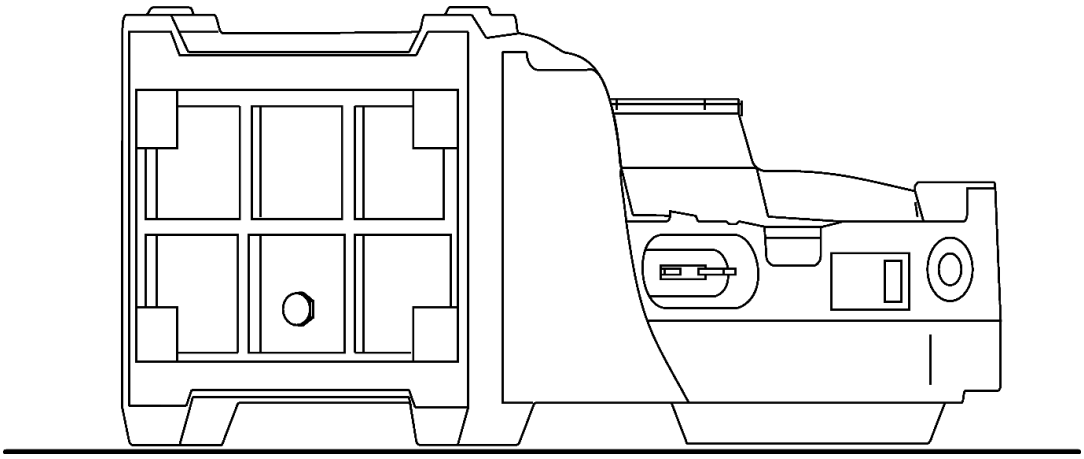

Installing the Casters

The Cool Boss is shipped with heavy-duty locking casters to both support and allow easy movement of the cooler around your facility. The Casters are shipped in a separate box with the Remote Control.

1. Locate and Install the four swivel Casters using the four bolts and flat washers for each Caster. As detailed in the figure below.

   The Casters are shipped in a separate box with the Remote Control.

2. Lock the two rear Casters by pushing down on the larger pedal. Pushing down on the small caster releases the lock.
3. Have an assistant help rotate the Cool Boss upright onto its Casters.

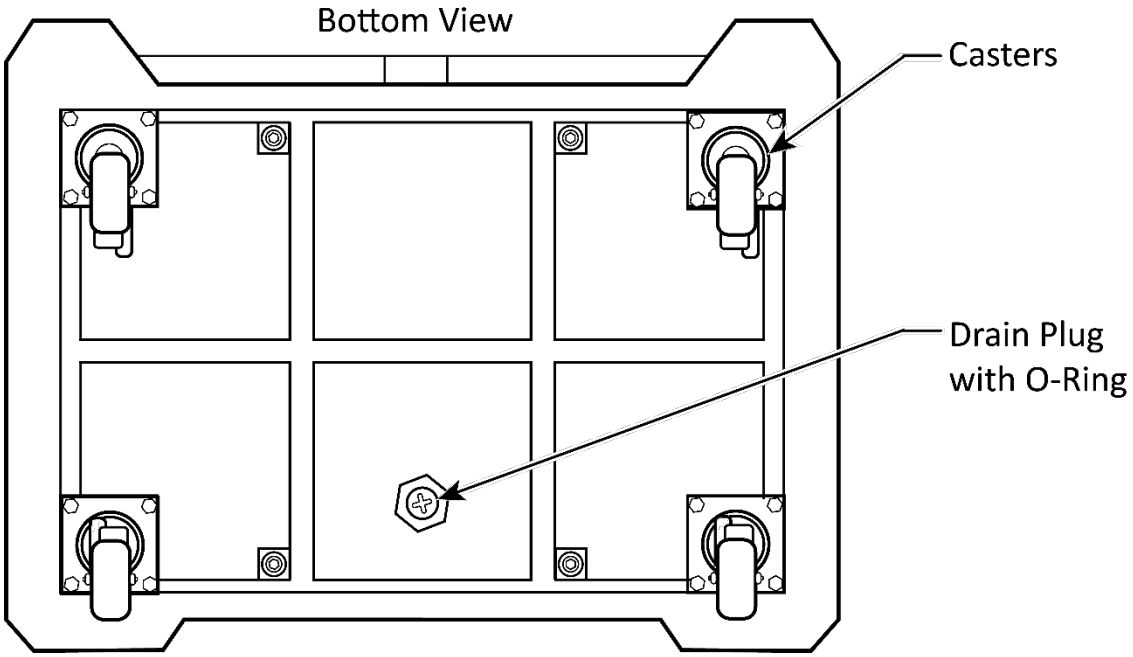

Installing the Media

The Cooler pulls warm air through a Media saturated with water. This Media incorporates a Moisture Lock on one side made of a black nonabsorbent resin which reduces evaporation and increases the efficiency. Properly installed Media is critical to the Cool Boss operation. The black resin side **must always** be installed toward the warm air side. ***The internal channels within the media should be oriented so that the water flows down and inward towards the fan.*** Refer to the figure below.

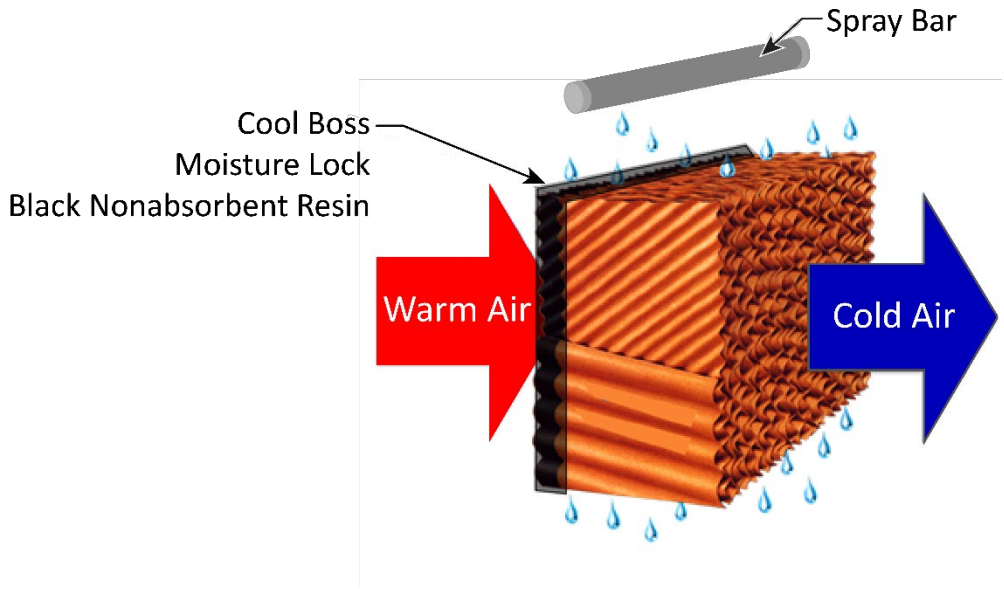

To install the Media:

1. Retrieve the Media for your specific Cool Boss model. Each Cool Boss model uses a different number of Media sections. Refer to the table below.

Model	Qty.	Part Number
CB-16	3	5326296
CB-28	4	5326297
CB-36	5	5326298

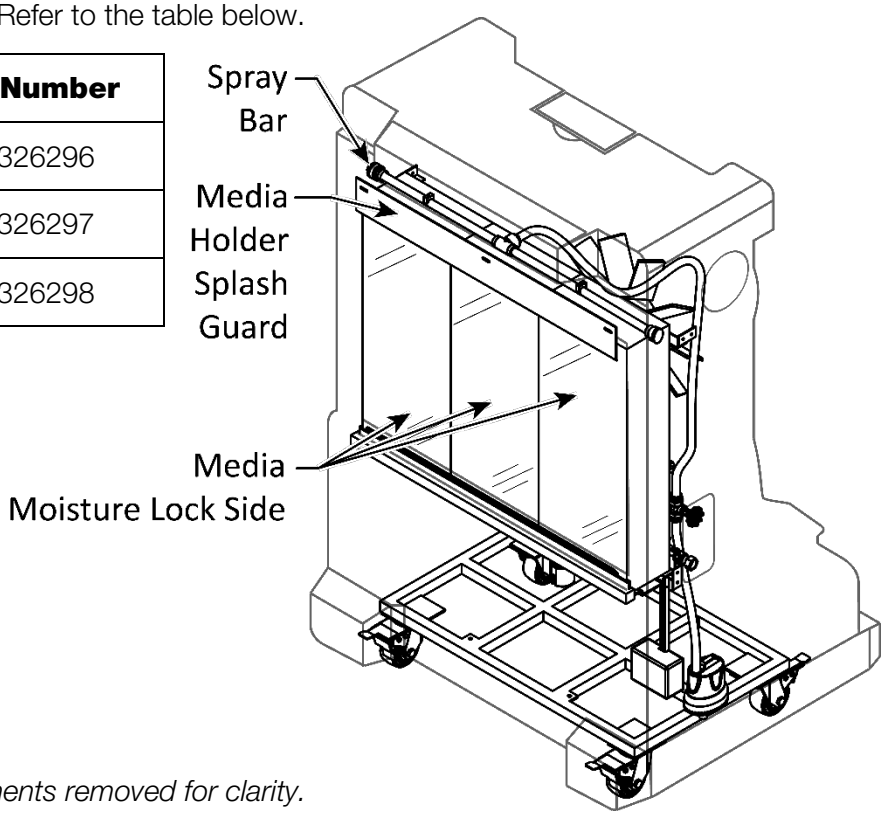

Not to scale, some components removed for clarity.

2. Remove and retain the three screws securing the Media Holder Splash Guard. Refer to the figure below.

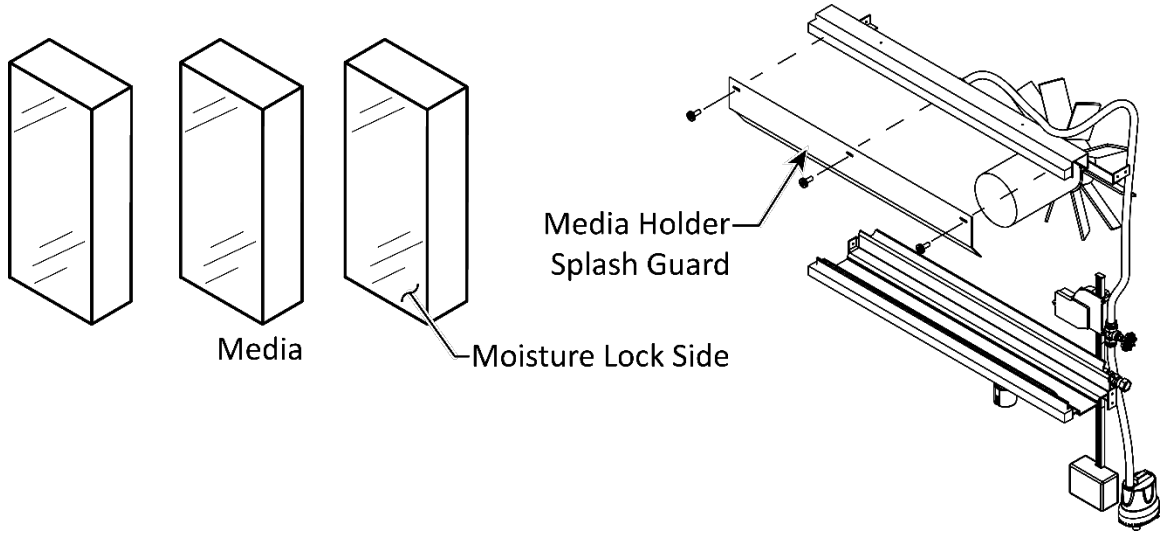

Not to scale, components removed for clarity.

3. Insert one Media section into the Cool Boss. Verify the Moisture Lock Black Resin side of the Media is oriented to the warm-air side. Channels in the Media are oriented to direct the water flow downward and **toward the Warm Air Intake side** of the Cool Boss. Slide the first Media as far left as possible. Refer to the figure below.

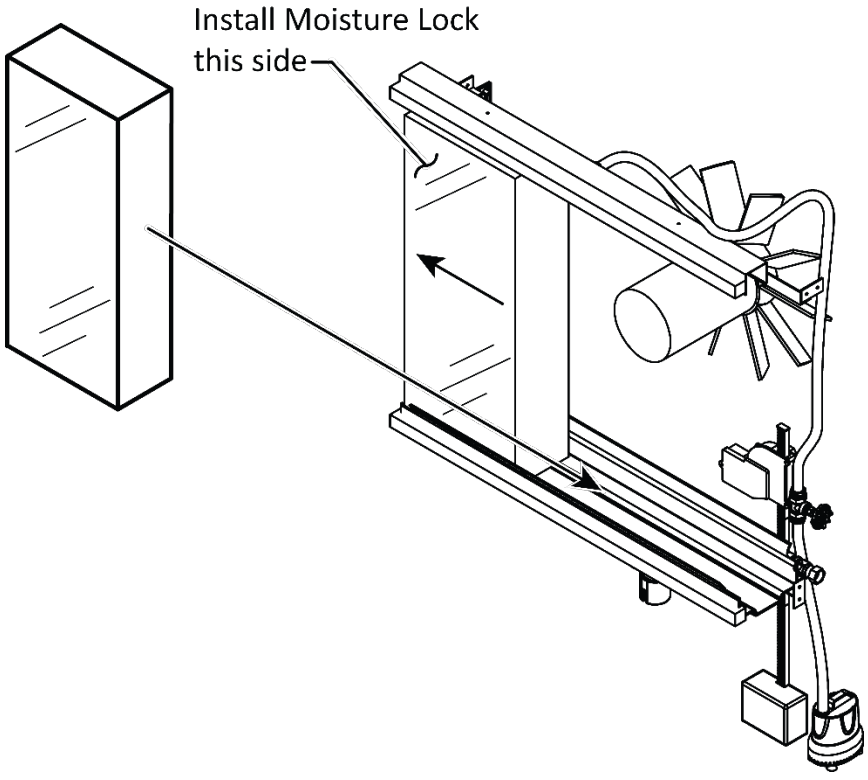

Not to scale, some components removed for clarity.

4. Install another section of Media and slide the new section of Media as far right as possible. Orient the Media channels as in the previous step.

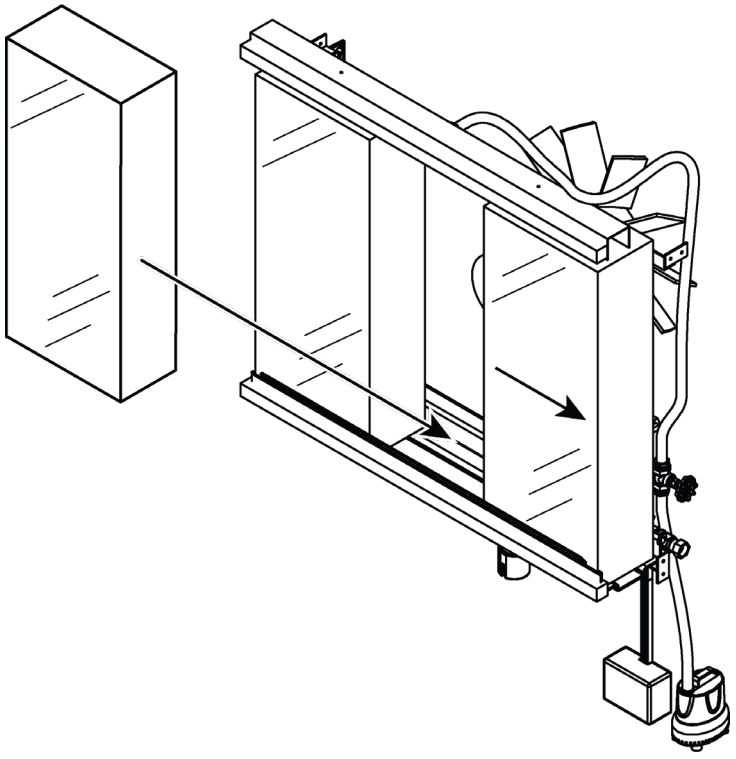

Not to scale, some components removed for clarity.

5. Install the last section of Media in the open middle section. Orient the Media channels as in the previous step.

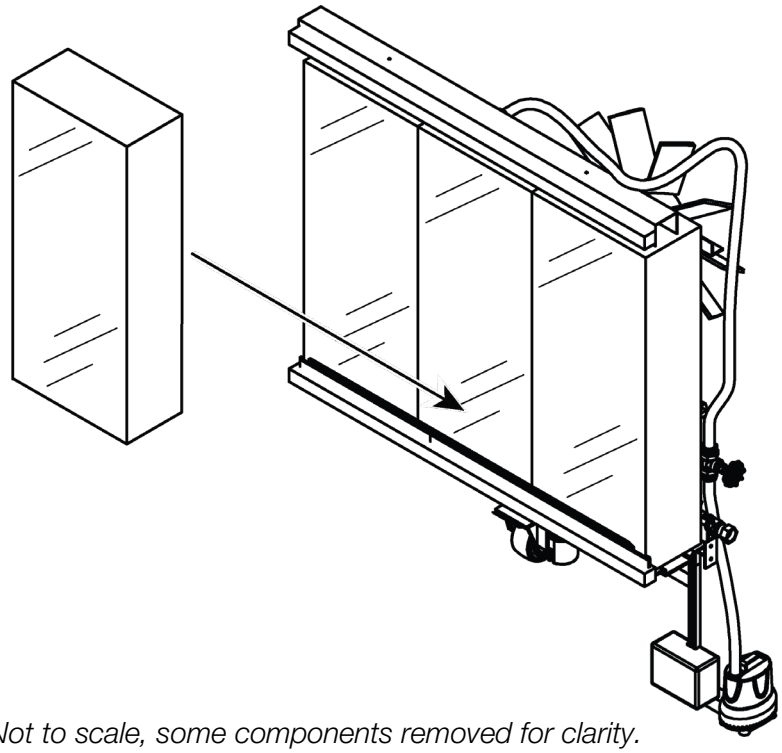

Not to scale, some components removed for clarity.

6. Install the Media Splash Guard using the three screws removed in step 1.

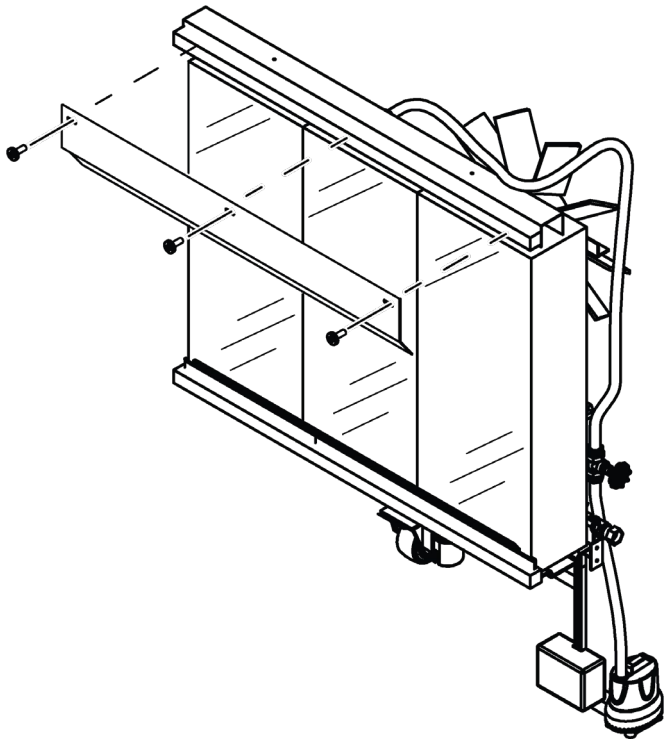

Not to scale, components removed for clarity.

Find a location for your Cool Boss

Find a suitable location for the Cool Boss (hot air to the rear, cooling area to the front). The Cool Boss should be indoors, near an appropriate power and water source, and in a low-traffic and well-ventilated area.

⚠ **WARNING** This equipment has internal arcing or sparking parts that should not be exposed to flammable vapors. The unit must not be located in a recessed area or below floor level.

⚠ **WARNING** Verify the floor will support the weight of the Cool Boss with a ***full*** reservoir; is well constructed and stable enough to prevent the Cooler from tipping over.

To choose a location for the Cool Boss Cooler:

1. Unlock the Casters to roll the Cool Boss. Direct the Fan outlet toward the area to be cooled.

⚠ **CAUTION** To ensure efficient operation, the Cool Boss requires adequate air flow for intake and exhaust. Verify a window or door is open.

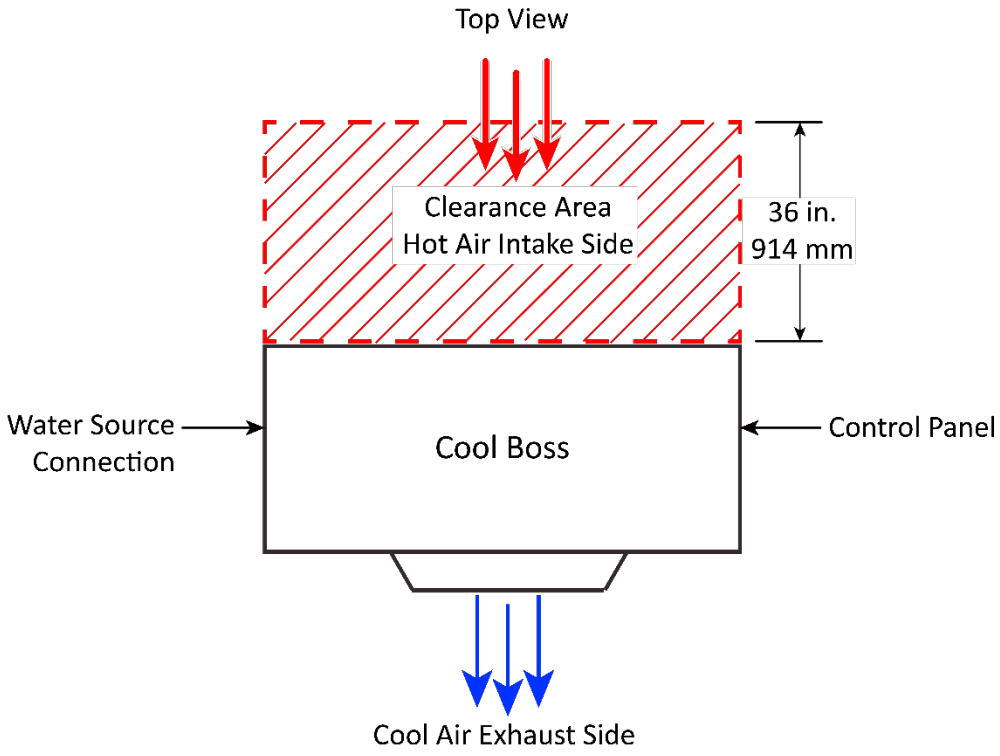

2. Keep 36" / 914 mm minimum behind the Cool Boss open for air intake.

⚠ **WARNING** Verify the Power Cord and Water Supply Hose are routed to prevent a tripping hazard and are not routed under carpets or across sharp edges.

3. Once you have determined and moved the Cool Boss into position, **Lock a minimum of two Casters**, by pressing down with your foot on the large pedal locking mechanism on each Caster. To unlock the Casters, press down on the small pedal.

⚠ **CAUTION** Do not start the Cool Boss until you have locked a ***minimum*** of two Casters; this ensures that unintended movement caused by the thrust of the Fan will not occur.

Fill the Water Reservoir

There are two options to fill the Reservoir, using a hose connected to the 3/4 inch Water Inlet Connector with Float Valve, or manually filling the Reservoir through the Reservoir Fill Inlet.

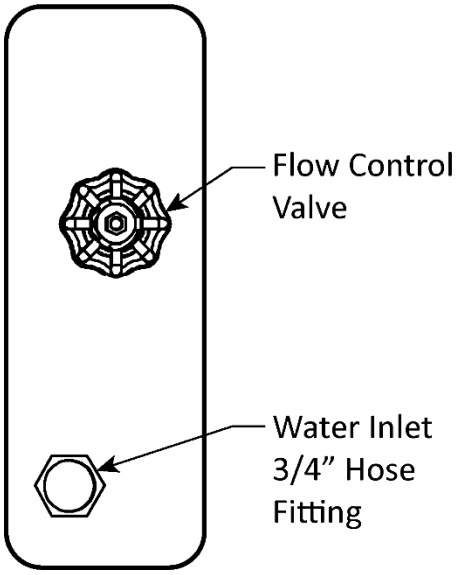

To fill the Reservoir:

1. You may connect to the Water Inlet Connector on the left side of the unit using the standard 3/4 inch Hose fitting and a Hose that is rated to 72 psi / 0.5 MPa maximum water pressure at your location. Turn on the water and verify there are no leaks at the connection point. A Hose is **not** supplied with the Cool Boss. See figure to the right.

   If you are utilizing the 3/4 inch Water Inlet Connector, the Reservoir Float Valve will shut off the water before the maximum fill level is exceeded.

   ⚠ **CAUTION** Do **not** connect to a water source with a supply pressure in excess of ≈72.5 psi / 0.5 MPa.

2. Alternatively, you may manually fill the Reservoir using the Water Reservoir Inlet found below the Reservoir Fill Level Gauge. Remove the threaded plug and fill.

   Add ***clean*** water. Fill to the Max. fill level only, do **not** overfill. Monitor the Reservoir level using the Fill Gauge located on the front of the Cool Boss. See the figure below. Water temperature must be less than 113°F (45°C).

   After filling, Replace the Threaded Plug, remove and dry any spilled water on the cool boss or floor around the unit.

   ⚠ **CAUTION** Use only cold clean water to fill the Cool Boss. No detergents or additives of any kind.

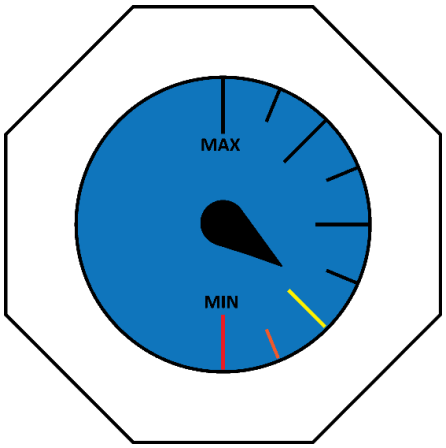

Model	Water Capacity
CB-16L / H	≈60 gal. / 230 liters
CB-28L / H	≈80 gal. / 300 liters
CB-36L / H	≈115 gal. / 440 liters

Connecting to Power

Before connecting this unit to a power source, first verify the required voltage by studying the model nameplate affixed to your machine. Any Cool Boss model number with an **L** suffix indicates 110 VAC operation; model numbers with an **H** suffix indicates 208 to 240 VAC operation (e.g. CB-16**L** for **110 VAC** operation, CB-16**H** for **220 VAC** operation). ***It is recommended that a separate electrical circuit servicing only the Cool Boss be provided.***

If your Cool Boss is equipped with a plug **not** compatible with your current power source, you must contact a licensed, certified Electrician. The Electrician will install a separate 15 Amp circuit protected by a fuse or circuit breaker with an appropriately grounded power receptacle in accordance with all national and local electrical codes. **Use an outlet that cannot be turned off by a switch**.

No Electrician is required to use the Cool Boss with a 110 VAC power source as shipped from the factory. Units operating at 110 VAC have the appropriate plug attached. Only units requiring 220 VAC operation require an electrician to install the required 220 VAC plug.

⚠ **DANGER** ***All*** electrical work must be accomplished by a ***licensed, certified Electrician***, in accordance with national and local electrical codes. If you do not use a licensed, certified Electrician, you void your warranty and put everyone who uses the cooler in danger of injury or, in rare cases, death.

To connect the Cooler to a 220 VAC power source:

1. Verify the Cool Boss is ***disconnected from the power source.***

   If it is connected, disconnect it. **Do not begin to install a 220 VAC plug until you are sure that power has been disconnected from the unit.**

2. Verify the Cooler is configured for 220 VAC operation. Locate the Model/Serial Number plate near the Cooler Display. The operating voltage is indicated on this data plate and should indicate 208 – 230 VAC operation. If this data plate indicates 110 VAC, then the unit cannot be run on 220 VAC.

3. Have a ***licensed, certified Electrician*** attach a 250 VAC NEMA 30A, 2-Pole, 3-Wire plug. This Plug is not shipped with the Cool Boss. You must have the Electrician bring the correct plug.

   The colors of the three exposed wires from the power cord are Brown, Blue, and Green/Yellow, the European color code.

Important: To connect the three exposed wires to an appropriate Plug or to hard-wire them, have your Electrician follow the electrical codes for the country and locality in which you are using the unit.

For example, if you are using the unit for 220V in the United States, the color codes of the power cord wiring on the Cooler correspond to:

Brown: Live

Blue: Live

Green/Yellow: Ground

If you were using the unit in a European country, the color codes on the wiring that comes with the Cooler correspond to:

Brown: Live

Blue: Neutral

Green/Yellow: Ground

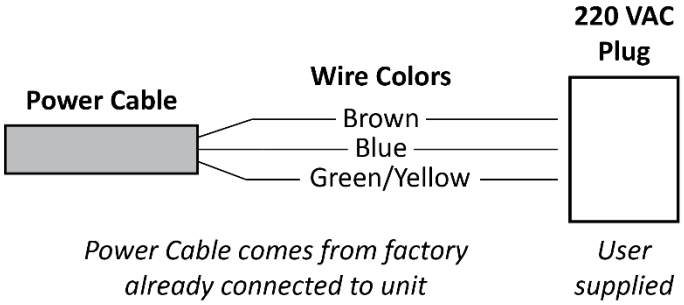

Information about color code conventions in other regions and countries is available online. Make sure your Electrician installs the Plug in accordance with all applicable national and local electrical codes.

4. Plug the Cool Boss power cord into a 220 VAC outlet protected by an appropriate circuit breaker.
5. Test the unit to verify the Cooler is working normally.

Additional electrical information:

Damage caused by improper electrical installation (such as not grounding the unit) voids the warranty.

⚠ **WARNING** Disconnect power **before** performing **any** *troubleshooting or maintenance*. Make sure the unit cannot be re-energized until you are done.

⚠ **WARNING** Plug into a properly grounded electrical receptacle only.

⚠ **WARNING** **Never** remove the Ground Prong from the plug end of the Power Cord.

Ground Fault Circuit Interrupter (GFCI)

The Cool Boss incorporates a Ground Fault Circuit Interrupter. The GFCI acts as a Circuit Breaker in the event of a Ground Fault. A Ground Fault occurs when the power conductor comes into direct contact with the equipment's frame or Ground. To test the GFCI see the **Maintenance Section**.

⚠ **WARNING** The Cool Boss must connected to a properly grounded electrical outlet for the GFCI to function. If the Outlet is not correctly grounded or if the Power Cord is damaged preventing the Ground connection, the GFCI cannot protect you from electrical shock.

Extension Cords

If an extension cord is required, use only cords with a polarized plug/receptacle no longer than 100 feet in length. Never use an extension cord that is not properly rated to handle the electrical load. When making connections, ensure all local and national electrical codes are adhered to.

Minimum requirements for Extension Cords	
25-50 Feet in length	*Minimum* 14 AWG
Up to 100 Feet in length	*Minimum* 12 AWG

⚠ **WARNING** **For generator users and or areas with frequent brown-out conditions.** Motor failure due to excessive high or low voltage is **not** covered under warranty. If you plan to use the Cool Boss with a Generator or operate in an area with frequent brown-outs, verify that the power source can provide the required current and voltage. While voltage variations are common (±5%) both high and low voltage episodes in excess of 15% to 20% can cause Electric Motor overheating and premature Motor failure.

Low voltage will cause the Motor to draw more electrical current to deliver the same amount of force to the Fan Blades. Excessive current overheats the Motor Windings, eventually burning through the insulation and resulting in complete Motor failure.

High voltage episodes can cause premature failure of electrical and electronic components due to overheating.

Operation

This section describes how to operate your Cool Boss Evaporative Cooler.

⚠ **WARNING** The Cool Boss should only be operated by authorized, trained personnel. That training includes reviewing and understanding the Operation Manual and safety Labels on the Cool Boss. Do ***not*** allow children or impaired persons to operate the Cool Boss.

⚠ **WARNING** ***Never roll anything heavy or sharp over the power cord.*** Try to find a location where people will not be constantly walking over the power cord, presenting a tripping hazard. The product should only be operated by authorized, trained personnel.

⚠ **WARNING** **Never** operate the Cool Boss unless the Ground Fault Circuit Interrupter (GFCI) is functioning.

⚠ **WARNING** **Never** remove the Ground Prong from the plug end of the Power Cord.

⚠ **WARNING** **Do not** run the Power Cord under a rug or other flammable material.

⚠ **WARNING** Use only in a well ventilated open environment with a fresh air supply.

⚠ **WARNING** **Do not** use the Cool Boss in areas with airborne pollutants, flammable gases and contaminates.

⚠ **WARNING** Ambient operating temperature must remain between 65 to 113˚F / 18 to 45˚C.

⚠ **WARNING** Never spray unit with water as moisture may harm the motor or other electrical system components.

⚠ **WARNING** Do **not** operate near open containers of flammable liquids or gases.

⚠ **WARNING** **Always** maintain a minimum distance of 50 feet / 15 meters from any open flame or sparks.

⚠ **WARNING** The Cool Boss is not designed to be used by children or persons with reduced physical, sensory or mental capabilities or lack of experience and knowledge unless they have been given supervision or instruction concerning use by a person responsible for their safety.

⚠ **WARNING** Hearing protection **required** when Fan is operating at maximum and personnel are closer than 10 ft. / 3 m for prolonged periods.

⚠ **WARNING** **Never** operate the Cool Boss unless all Media is securely in place.

⚠ **WARNING** **Always** dry the Media after use by turning off the Cooling and running the Fan without circulating water. This may take from 15 to 45 minutes depending on temperature and humidity.

To operate the Cool Boss for cooling:

1. Before starting the Cool Boss, verify that the Media Holder Splash Guard over the Media is secured in place. This will reduce the chances of water splashing out of the Cool Boss and creating a slipping hazard in front of the Media.
2. Open a Door or Window, if using the Cool Boss indoors. Sufficient airflow for intake and exhaust is critical.
3. Verify that the Cool Boss is connected to a Water Source through the ¾" Hose Inlet or the Water Reservoir is full.
4. **Close** the Flow Control Valve (turn the Valve clockwise until it stops). See figure to the right.
5. Verify at least two of the locking Casters are locked to prevent the Cool Boss from moving with additional thrust from the Fan.
6. Plug-in the Cool Boss.
7. Press **Power** on the Cool Boss Fan Controls. Refer to the Status Display on the Control Panel to determine current settings and air temperature at the Fan.
8. Press the **Fan** button to supply power to the Fan. The Fan indicator will light on the Status Display. Press **Up** ▲ or **Down** ▼ to adjust the power setting to 25% or less.
9. Verify the Low Water Indicator displays Green on the Status Display. If the Low Water indictor displays Red, verify the water source is connected and providing water under pressure. If filling manually, turn off the Cool Boss, unplug it from power and fill the Reservoir.
10. If the Low Water Indicator is Green , Press the **Cooling** button once to turn on the Pump. The Cooling indicator will light on the Status Display.
11. Slowly **open** the Flow Control Valve. Leave the Flow Control Valve on low until the top ≈30% of the Media becomes saturated (30 seconds minimum). Once the top 30% of the Media is saturated the Flow Valve may be slowly opened to increase the flow of water.

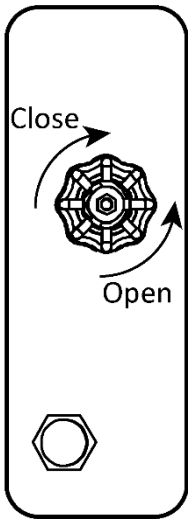

⚠ **CAUTION** Fully opening the Flow Control Valve onto dry Media will flood the Media faster than it is capable of absorbing the water. Water will then be forced out of the Media onto the floor and surrounding area. Carefully adjust the Flow Control to evenly saturate the Media before increasing the flow of water onto the Media and before applying more power to the Fan.

⚠ **CAUTION** Make sure there is water in the Water Reservoir before pressing **Cool;** if not, the Pumps' internal low-water switch will keep the Pump in the off condition.

⚠ **WARNING** Rotating Fan Blades! Keep hands, fingers and loose clothing away from the Fan when it is running.

12. Press **Up** ▲ or **Down** ▼ to adjust the Fan speed on the Control Panel or the Remote Control.
13. Increase the flow of water to increase cooling as the media becomes saturated.

Ozone Generator

⚠ **WARNING** ***Ozone generators are to be operated in unoccupied spaces only.*** This device is not intended to produce Ozone while personnel or pets are present. Long-term exposure to Ozone is not recommended. Ozone can contribute to respiratory and eye irritation, especially in those with asthma or Chronic Obstructive Pulmonary Disease (COPD).

The Cool Boss incorporates an Ozone generator. This function is controlled by a simple on-off button on the Control Panel. The Ozone Generator uses high voltage to electrically charge plates producing Ozone in the Air moving between the plates.

To Use the Ozone Generator function:

1. Clear the area to be exposed to Ozone (O_3). No personnel or pets are allowed in the area.
2. Verify there is sufficient fresh air ventilation to allow the Cool Boss to operate.
3. Apply power to the Cool Boss.
4. Set the Fan to the desired speed.
5. Push the Ozone button or the Remote Control and the Ozone indicator will illuminate on the Cool Boss Status Display indicating the Generator is in operation. Leave the area while the generator is in operation.
6. Shut down the Ozone Generator and leave the Fan in operation to ventilate the space for at least 30 minutes before allowing occupation by personnel.

To shut down the Cool Boss:

1. Close the Flow Control Valve and turn off the Pump by pressing the Cooling Button once. Verify the Pump is off on the Status Display.
2. If using the ¾ inch Water Source inlet, close the Valve supplying the water to the Cool Boss.
3. Dry the Media.

⚠ **WARNING** Dry the Media at the end of each day to reduce the possibility of bacteria and mold growth. Running the Fan without circulating water for 15 to 45 minutes should dry the Media in the majority of cases. Media drying times will vary based on heat, humidity and Fan speed.

4. After the Media is dry, reduce the Fan power, then turn off the Cool Boss.

To shut down the Cool Boss using the Timer:

1. **Close** the Flow Control Valve and turn **off** the Pump by pressing the Cooling Button once.
2. If using the ¾ inch Water Source inlet, **close** the Valve supplying the water to the Cool Boss.
3. Press the **Timer** button until the desired number of hours before shut-down are displayed.

   The Cooler will shut down based on the time entered.

Audio System Operation

The Cool Boss includes a Bluetooth v5.0 receiver that will stream audio files from you mobile device.

To use the Cool Boss Audio System with 5.0 Bluetooth®:

1. Verify power is supplied to the Cool Boss.
2. Turn the Cool Boss Volume Control to a low level.

3. Press the **Power** button in the Cool Boss Audio section.
4. Press the Mode button until the **BT** is illuminated on the Audio Display section of the Cool Boss.
5. A chime will sound from the Cool Boss and BL:UE will appear on the audio display. Refer to the figure below.

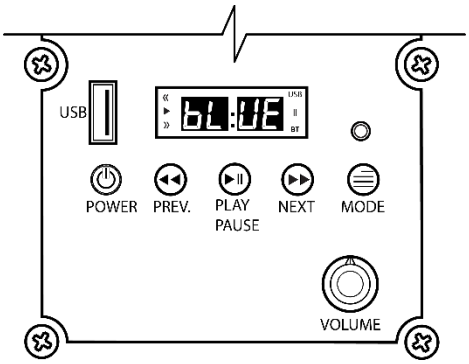

6. Go to the Bluetooth settings on your mobile device and select **XF-a** from the list of available Bluetooth devices to pair.
7. A chime will sound if your mobile device was successfully paired.
8. Select and play the desired media on your mobile device.
9. Adjust the volume to your desired level.
10. To shut down the Audio System simply press the Power Button once.

To charge your phone using the USB port:

The Cool Boss includes a USB port that will charge portable devices. USB 2.0 specification, delivering up to 0.5 Amps at 5 Volts. The USB port is provided power anytime the Cool Boss is in the on condition. The USB port will **not** play audio files through the Cool Boss.

⚠ **CAUTION** Contaminated, wet or damaged USB connectors may cause damage to the Cool Boss Control. Always verify that the USB you are using is clean and dry before plugging into the Cool Boss or your portable device.

1. Connect the Cool Boss to power.
2. Connect your phone to the USB connector on the Cool Boss Control Panel using an appropriate USB cable. A USB Cable is ***not*** provided with the Cool Boss.
3. Press the Cool Boss **Power** button ***not the Audio Section*** power button.
4. Power should now be provided to the USB device.

Cool Boss Accessories - Ducting Kit

A Ø20 in. / Ø 508 mm x 15 ft. / 4.5 m Reinforced Polyvinyl Flexible Ducting kit may be purchased as an accessory for the for the **CB-16L and H models only**. (SKU 5150236) The Ducting Kit allows cool air to be directed precisely where you need it. Find more information on the web at coolboss.com. You can always find the latest information and Quick Start Guide for the Ducting kit on the **Cool Boss website**.

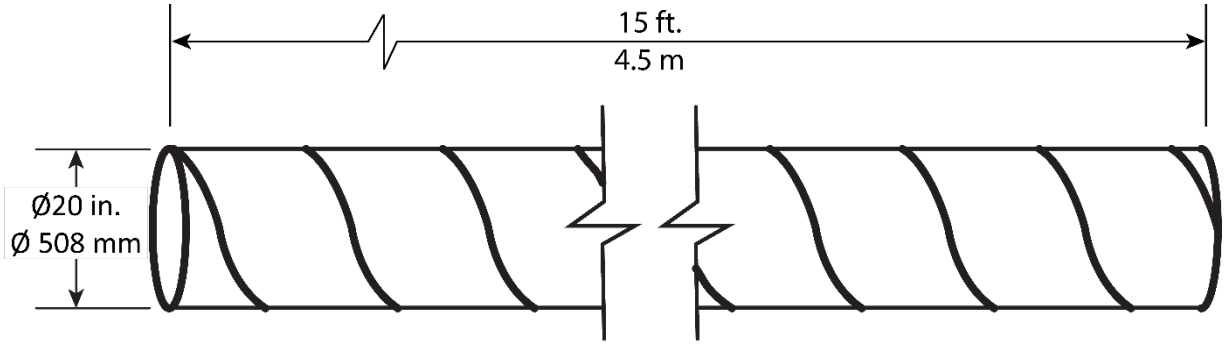



Maintenance

⚠ DANGER Disconnect the unit from its power source ***before*** performing any maintenance! Make sure the unit is locked out from power and cannot be energized while maintenance is being performed. If your organization has Lockout/Tag out policies, make sure to implement them before servicing the Cool Boss.

⚠ WARNING Rotating Fan Blades can cause serious injury! Keep hands and loose clothing clear!

⚠ WARNING Disconnect the Power Cord when cleaning the Cool Boss and exercise care to avoid splashing water on the motor or internal electronics.

To maintain the Cool Boss:

- **Daily**. Turn off the Cooling Pump and run the Fan to dry the Media and inhibit the growth of bacteria, mold and mildew. Typically Media drying can take 15 to 60 minutes depending on the current temperature and humidity.
- **Weekly**. Change the Cool Boss Reservoir water when it gets dirty. Dirt and other pollutants from the environment will get into the water and reservoir. Cool Boss recommends draining and cleaning the Reservoir weekly or more often depending on the frequency of use and the cleanliness of the environment.

⚠ CAUTION Exercise care when removing the Drain Plug on the bottom of the Reservoir. There is a sealing O-Ring on this plug that may stick to the housing and later fall to the ground and possibly become lost. See figure to the right.

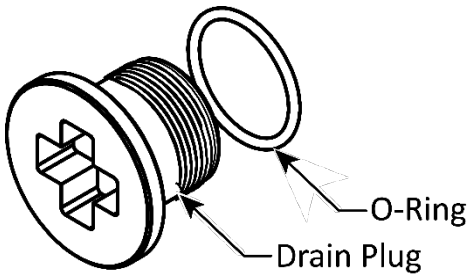

- **Weekly**. Drain and clean the Cool Boss Water Reservoir. Dirt and other pollutants from the environment can settle in the Cool Boss Water Reservoir. Regular cleaning can remove these contaminants and reduce the build-up of minerals.
- **Monthly**. Check the GFCI function monthly. Test the GFCI on the Cool Boss Power Cord once a month to ensure it is working and protecting you from electric shock.
- **Monthly**. Clean the outside of the unit. Use no harsh chemicals. Unplug the Cool Boss and wipe down the outside of the unit with a damp cloth. The frequency of use and the cleanliness of the environment will affect the frequency of cleaning required.

⚠ WARNING Do not spray the Cool Boss with water. The electronics are not sealed. Water can damage the motor and/or other parts of the electrical system.

- **Monthly**. Empty the Reservoir and clean it.
- **Monthly**. Remove the Media and clean as detailed below. Dirt and other pollutants from the environment will become caught in the Media. Clean it regularly to keep the air fresh and clean.

⚠ WARNING Do not operate your Cooler if you find maintenance issues; instead, remove it from service. Assistance with your Evaporative Cooler is available from your dealer, by calling Cool Boss at **(805) 933-9970**, or by emailing **support@coolboss.com**. You may also contact Cool Boss for parts replacement (please have the serial number and model number of your unit available).

To clean the Reservoir:

1. The Media must be dry before removing. If the Media is wet, run the Fan without running the Cooling Pump until dry.
2. Turn off and then unplug the Cool Boss.

⚠ **WARNING** Disconnect the unit from its power source before performing any maintenance! Make sure the unit is locked out from power and cannot be energized while maintenance is being performed. If your organization has Lockout/Tag out policies, make sure to implement them before servicing the Cool Boss.

3. Remove and retain the three Splash Guard Fasteners securing the Media Holder Splash Guard and then remove the Splash Guard.
4. Remove the center Media first by pulling the top of the Media away from the Cool Boss. You may need to apply a little pressure to get the Media out. Be careful not to damage the Media.
5. Remove the remaining Media in the same manner.
6. Remove the plug at the bottom of the Reservoir and drain into a container or appropriate drain.

⚠ **CAUTION** Take care to retain the O-Ring that provides a seal between the Plug and the Reservoir.

7. Remove any residual water with rags or a wet dry vacuum.
8. Wipe with clean rags and remove any mineral deposits. Use no harsh chemicals.
9. Refill the Reservoir and replace the Media. The Cool boss is ready to use.

Tip Cool Boss recommends wearing gloves when handling the Media.

To clean the Media:

1. The Media must be dry before removing. If the Pad is wet, run the Fan without running the Cooling Pump until the Pad is dry.
2. Turn off and then unplug the Cool Boss.

⚠ **WARNING** Disconnect the unit from its power source before performing any maintenance! Make sure the unit is locked out from power and cannot be energized while maintenance is being performed. If your organization has Lockout/Tag out policies, make sure to implement them before servicing the Cool Boss.

3. Remove and retain the three Splash Guard Fasteners securing the Media Holder Splash Guard and then remove the Splash Guard.
4. Remove the center Media first by pulling the top of the Media away from the Cool Boss. You may need to apply a little pressure to get the Media out. Be careful not to damage the Media.
5. Remove the remaining Media in the same manner.
6. Rinse the Media under running water to clean and use a soft brush or rag to gently remove accumulated dirt. Do ***not*** use highly pressurized water or air to clean the Media.
7. Dry the Media before attempting to reinstall in the Cool Boss.
8. Put the Media back in place. Install the bottom first and then the top. You may need to apply gentle pressure to get the top of the pad into place.

To test the GFCI incorporated into the Cool Boss Power Cord:

1. Plug the cord into a properly grounded wall outlet. The indicator should be illuminated. Refer to the figure below.
   a. If not, check the wall outlet for power.
   b. If power is present at the outlet, the Power Cord or the GFCI is defective and requires replacement.
2. Press the small Test button. The Indicator should go out and no power should be available at the Cool Boss.
3. Press the Reset Button and the Indicator should be illuminated again. The Cool Boss should now be provided power and is ready for use.
4. If the GFCI does not function, take the unit out of service, contact your dealer or BendPak Support at **bendpak.com/support**, via email at **support@bendpak.com**, or by phone at **(800) 253-2363**.

⚠ **WARNING** Do not use the Cool Boss if the GFCI fails this test.

⚠ **WARNING** The GFCI does not protect against electrical shock due to contact with both circuit conductors or a fault in the wiring supplying the GFCI.

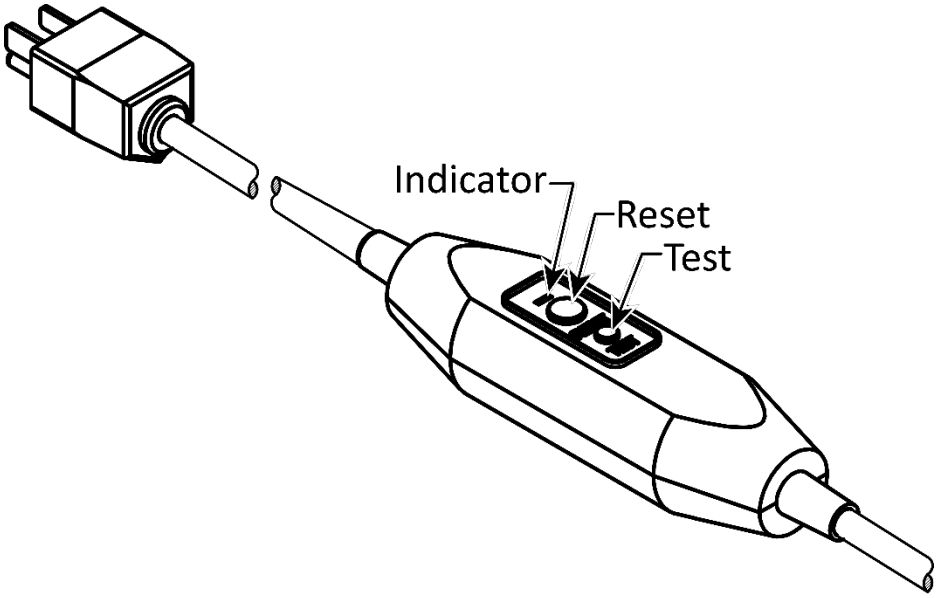

⚠ **WARNING** Do not operate your Cooler if you find maintenance issues; instead, remove it from service, then Assistance with your Evaporative Cooler is available from your dealer, by calling Cool Boss at **(805) 933-9970**, or by emailing **support@coolboss.com**. You may also contact Cool Boss for parts replacement (please have the serial number and model number of your unit available).

To store the Cool Boss:

1. Drain the Reservoir and wipe clean and dry.
2. Secure the electrical cord.
3. Cover the Cool Boss Cooler to prevent dust build-up and store in a dry, protected area.

Troubleshooting

⚠ **WARNING** This Evaporative Cooler uses electrical energy; if your organization has Lockout/Tagout policies, make sure to implement them before performing any Troubleshooting.

Issue	Probable Cause	Action to Take
Control Panel inoperative.	No power. Circuit Breaker open. Panel component failure.	– Check the power supply. – Reset the circuit breaker. – Replace the panel.
Unit not working.	No power.	– Power cycle the unit on-off. – Verify the power supply is functional.
Fan not working or moving slowly.	Fan is stuck. Fan is broken. Brown-out or low voltage.	– Check for blockage and remove. – Repair fan. – Correct voltage supply issue.
Motor not working.	Control Panel is not working. Motor failure	– Replace Control Panel. – Replace motor.
Drain leaks.	Drain Plug is not tight Drain Plug is cross-threaded. O-Ring is missing	– Tighten Drain Plug. – Replace Plug, if thread is ruined. – Replace O-Ring.
Fan dripping water.	Water tubing is disconnected or leaking.	– Check internal water connections and tubing.
Remote does not work.	Battery is inoperative. Something is obstructing receiver or remote. Remote is out of range of the receiver.	– Replace both batteries (AAA 1.5 V). – Clear the obstruction. – The remote must be within 32-ft. / 10 m and have a direct line-of-sight to the Cool Boss Control Panel.
The USB port will not charge my phone.	Damaged cable or connector(s).	– Replace the cable. – Check for debris in the connector – Check for bent or broken pins on the connector(s).
The Cool Boss Audio System is not playing audio through the Aux. Audio Jack.	Damaged cable or connector(s).	– Replace the cable.

Issue	Probable Cause	Action to Take
My Bluetooth device is not connecting.	Cool Boss Audio System not on or not set to Bluetooth operation. Smart device not paired with the Cool Boss. Smart device is out of range. Wireless signal interference. Insufficient frequency available due to the number of active wireless devices in the immediate area. Interference from 4 GHz cordless phone.	– Make sure the Cool Boss Audio System is set to BT mode. BT should be illuminated on the Cool Boss audio panel. – Verify your smart device is paired with the Cool Boss Audio System and the Bluetooth function is active. – Perform the Bluetooth Pairing procedure again. – Place your Bluetooth device closer to the Cool Boss – it may be out of range. – Move your Bluetooth device and the Cool Boss away from wireless sources – you may be experiencing interference. – Turn the Cool Boss Audio System off then on again. – If you have multiple Bluetooth Devices, verify you are connected to the correct device. – In heavy Wi-Fi traffic areas, multiple signals in close proximity to the Cool Boss may take up a lot of the frequency spectrum and the Bluetooth may not have any available spectrum to utilize. – Move or replace the 4 GHz cordless phone

Assistance with your Cool Boss is available from your dealer, by calling Cool Boss at **(805) 933-9970**, or by emailing **support@coolboss.com**. You may also contact Cool Boss for parts replacement (please have the serial number and model number of your unit available).

Parts Diagram

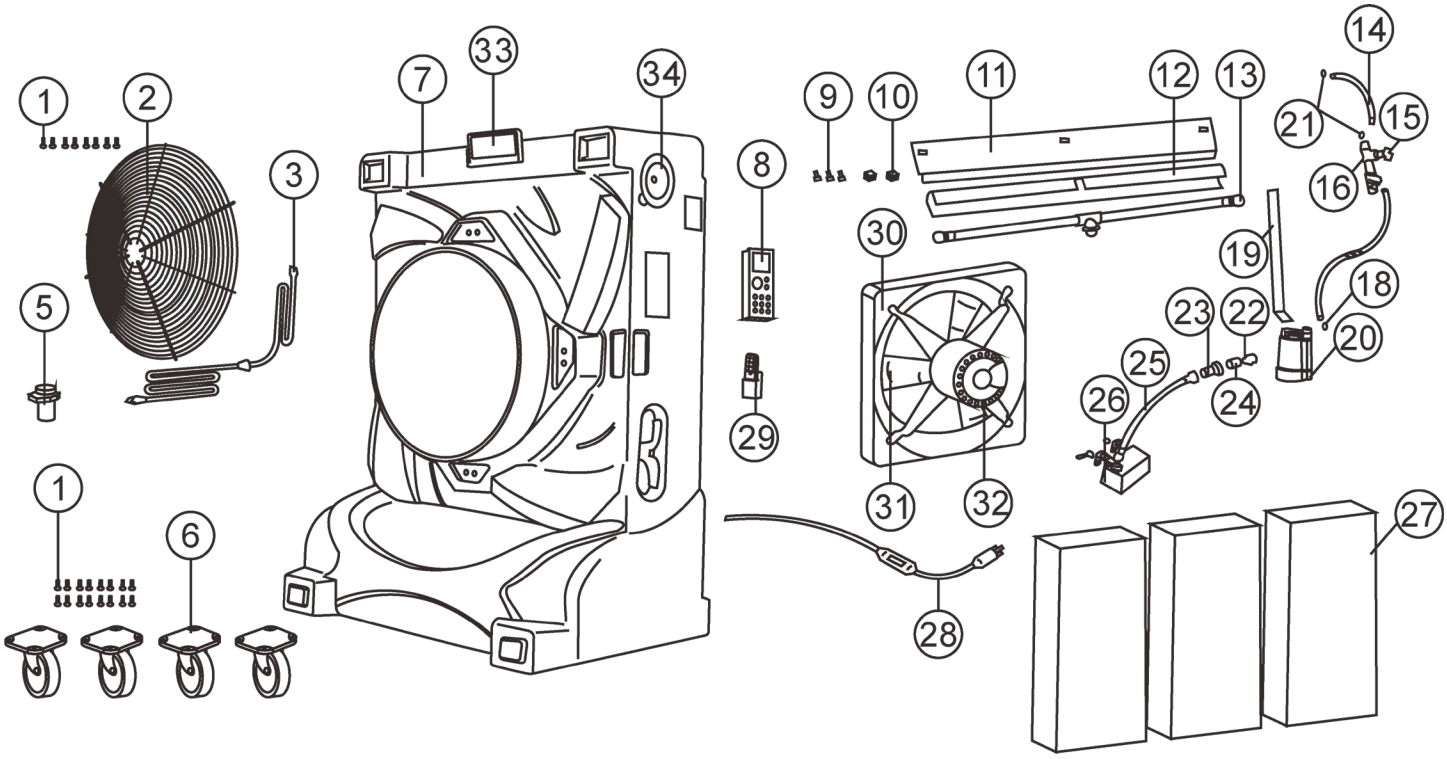

Item	Qty.	Part Number	Description
1	16		Screw
2			Grill, Protective Fan Blade
3		5326286	Electric Cord; CB-16, CB-28, CB-36 (used inside to connect electrical components)
4			
5	1		Outlet Pipe
6	1 set	5326293	Casters Set; CB-16L/CB-16H, CB-28 L/CB-28H (4-each/4" size specific)
6	1 set	5326294	Casters Set; CB-36L / CB-36H (4-each/5"; size specific)
7	1		Housing, Cooling Shell
8	1	5326288	Electronic Touch Pad Control Panel; CB-16, CB-28, CB-36 (all L/H models)
9	3		Fasteners (Splash Guard)
10	2		Switch Cover Plate
11	1		Media Holder Splash Guard

Item	Qty.	Part Number	Description
12	1		Bonnet, Spray Bar
13	2	5326301	Spray Bar End-Cap; CB-16, CB-28, CB-36 (all L/H models) 2 per unit.
14	1	5326300	Clear Tubing; CB-16, CB-28, CB-36 (all L/H models; 3/4" inside diameter x 8' for Constant Water Inlet Connection to Shut-off Valve and Submersible Pump to the Spray Bar)
15			Valve, Flow Control
16			Mounting Bracket, Control Valve
17			
18			Clamp, Wire Spring
19	1		Bracket, Submersible Pump Mount
20	1	5326283	Submersible Pump; CB-16L (110V)
20	1	5326284	Submersible Pump; CB-28L (110V)
20	1	5326285	Submersible Pump; CB-36L (110V)
21	2		Clamp, Wire Spring
22	1		Bolt, Float
23	1		Regulator, Inlet Water
24	1		Adapter, Hose
25			Hose, Float
26		5326295	Constant Water Inlet Shut-Off Valve; CB-16, CB-28, CB-36 (all L/H models) (Float Valve)
27	3	5326296	Media Pads; With Black Resin Face; CB-16L / CB-16H (3-pads for each unit)
	4	5326297	Media Pads; With Black Resin Face; CB-28L / CB-28H (4-pads for each unit)
	5	5326298	Media Pads; With Black Resin Face; CB-6L / CB-36H (5-pads for each unit)
28	1	5326292	Electric Power Cord w/ GFCI; CB-16L, CB-28L, CB-36L (voltage specific with 110v plug attached)
29		5326299	Remote Control And Holder; CB-16, CB-28, CB-36 (all L/H models)

Item	Qty.	Part Number	Description
30	1		Fan Shroud (Venturi)
31			Blade, Fan
32	1	5326289	Variable Speed Fan Motor 110V; CB-16L (voltage specific)
	1	5326290	Variable Speed Fan Motor 110V; CB-28L (voltage specific)
	1	5326291	Variable Speed Fan Motor 110V; CB-36L (voltage specific)
33	1		Floodlight, LED
34			Speaker
35			Water Level Indicator Assy.
36		5326287	Spray Bar; CB-36L/CB-36H (size specific; distributes water to the top of the media)
			Spray Bar; CB-28L/CB-28H (size specific; distributes water to the top of the media)
			Spray Bar; CB-16L/CB-16H (size specific; distributes water to the top of the media)
37			Ozone Generator Cells
38	1	5326302	Fill Cap; CB-16, CB-28, CB-36 (all L/H models)
39	1	5326303	Protective Cover CB-16L /16H (size specific)
	1	5326304	Protective Cover CB-28L /28H (size specific)
	1	5326305	Protective Cover CB-36L /36H (size specific)

Labels

A

COOL BOSS™

B

COOL BOSS™

PN XXXXXXX

C

⚠WARNING

READ MANUAL



HIGH VOLTAGE



SAFE OPERATION

- Read and understand instructions and all warning labels.
- **NEVER** operate if there is any damage to the plug or cord.
- **DO NOT route power cord under carpeting or flooring.**
- **NEVER** cover power cord with throw rugs, runners, or similar coverings.
- Minimize trip **hazard by routing power cord away from pedestrian traffic areas.**
- **ALWAYS** unplug the electric cord before performing inspections or repairs.
- Plug into three-prong grounded GFCI protected electrical receptacle only.
- **NEVER** step on or roll over power cord with heavy or sharp objects.
- **ALWAYS** remove plug from electrical receptacle by pulling on the plug and not the cord.
- **ALWAYS** test the GFCI receptacle or breaker monthly to ensure proper function.
- **DO NOT operate near open containers of flammable liquids or gases.**
- **ALWAYS maintain a distance of at least 50 feet from any open flame or sparks.**
- **NEVER** spray or wash unit with a garden hose as water may harm motor and other electrical system components.
- If the unit is damaged or it malfunctions, cease operation immediately. Visit **www.coolboss.com** and refer to the warranty, troubleshooting or FAQ page. To reach a Technical Support expert, call **1-855-223-2665** or email **support@coolboss.com.**

PN 5905263

D

⚠WARNING

Cooling pads must be installed and caster locks must be engaged before operation.

PN 5905264

E

⚠WARNING

SET UP AND OPERATION

- **DO NOT RUN PUMP DRY** or severe pump damage or failure will result.
- Use only in a ventilated open environment with fresh air supply.
- Area must be free from airborne pollutants, flammable gasses and contaminants.
- Ambient operating temperature must remain between 65-113°F (18-45°C).
- Maximum water temperature should never exceed 113°F (45°C).
- Verify that the Power Cord is connected to the correct voltage before operation. (115VAC Max. 1 Ph. 60 Hz. or 220VAC Max. 1 Ph. 60 Hz)
- **NEVER** spray unit with water as moisture may harm motor and other electrical system components.
- Before performing any type of service or cleaning, turn cooler unit to **OFF** setting then disconnect unit from the electrical power source.

CONSUMER NOTICE: This product contains chemicals which are known to the state of California to cause cancer, birth defects or other reproductive harm.

PN 5930604

F

⚠DANGER

ELECTRICAL SHOCK HAZARD. FAILURE TO FOLLOW THESE INSTRUCTIONS CAN RESULT IN DEATH, FIRE, OR ELECTRICAL SHOCK.

- **DO NOT** use an extension cord or cord adapters that is not properly rated to handle power load.
- **NEVER** remove ground prong from plug end.
- **DISCONNECT POWER** before servicing or removing any panels, covers and doors.
- Plug into a grounded three-prong GFCI protected receptacle only.
- **ALWAYS** test GFCI receptacle or breaker monthly to ensure proper function.
- Check power outlet for correct polarity before use.
- **DO NOT** open control box compartment. No serviceable parts located inside.
- **DISCONNECT POWER CORD** before changing media or opening fan housing.
- **NEVER** modify this equipment in any way or warranty will be voided.
- All repairs must be done by authorized technician.

IMPORTANT / REQUIRED POWER SOURCE

Before connecting this unit to a power source, first verify the voltage that will be required by studying the model nameplate affixed to your machine. (110V, 60HZ, 1PH, 15A or 208-230V, 60HZ, 1PH, 15A)

If your machine is equipped with a plug not applicable to your power source, change the plug as required using only an approved NEMA rated plug. Connect only to a fused and grounded electrical supply. It is recommended that a separate circuit serving only the cooler unit be provided. Use an outlet that cannot be turned off by a switch. If an extension cord is required, use only cords with polarized and/or three-prong plugs no longer than 100 feet in length. NEVER use an extension cord that is not properly rated to handle the power load. When making electrical connections, insure that local and national codes are adhered to. Use only with GFCI protected receptacles.

MINIMUM REQUIREMENTS FOR EXTENSION CORDS

- 25-50 FOOT IN LENGTH MIN. 14 GAUGE
- UP TO 100 FOOT IN LENGTH MIN. 12 GAUGE

WARNING! ALL WIRING MUST BE PERFORMED BY A CERTIFIED ELECTRICIAN. WHEN MAKING ELECTRICAL CONNECTIONS, INSURE THAT LOCAL AND NATIONAL CODES ARE ADHERED TO. USE ONLY WITH GFCI PROTECTED RECEPTACLES.

Cool Boss or BondPak cannot be held liable for any modifications made to this unit by any party, whether purchaser or third party. Technical support and service is available directly from your distributor or by calling Cool Boss support at 1-855-223-2665 for the distributor nearest you. You may also contact support for consultation on parts replacement. Please have serial number and model number of unit available.

PN 5905262

G

⚠WARNING

This cooling unit is not intended for use by children or persons with reduced physical, sensory or mental capabilities or lack of experience and knowledge unless they have been given supervision or instruction concerning use by a person responsible for their safety.

PN 5930603

H



⚠WARNING

Rotating fan blades.
Keep hands clear.
Follow lockout procedure before servicing.

PN 5905259

I

⚠DANGER

Unplug unit from power source before removing media pad. Fan can start unexpectedly due to the timer control feature.

PN 5905261

J

⚠CAUTION

WATER FILL

ADD WATER HERE. Use clean water only with no detergents or additives. Avoid water spillage and prevent risk of electric shock. Fill reservoir to "**MAX FILL**" level only.

PN 5905258

K

⚠CAUTION

HOSE CONNECT

ADD WATER HERE. Use clean water only with no detergents or additives. Avoid water spillage and prevent risk of electric shock. Fill reservoir to "**MAX FILL**" level only.

PN 5905254

L

CALIFORNIA PROPOSITION 65

⚠ WARNING ⚠

WARNING: This product contains chemicals known to the State of California to cause cancer and birth defects or other reproductive harm.
ADVERTENCIA: Este producto contiene sustancias químicas reconocidas por el estado de California como causantes de cáncer y defectos de nacimiento u otros daños reproductivos.

For more information visit:
www.P65Warnings.ca.gov

M

COOL BOSS
Theodore, AL USA
www.coolboss.com

MODEL NUMBER

DESCRIPTION

VOLTAGE

DATE OF MFG.

SERIAL NUMBER

DANGER!
Disconnect Power Before Servicing

UPC

CE EAC

WARRANTY VOID IF DATA PLATE IS REMOVED

N




N
M
G
H
E
C
F
J
I
B
D
COOL BOSS
COOL BOSS
L
K
A

Maintenance Log



Cool Boss™ - a Bend Pak Company

1645 Lemonwood Drive
Santa Paula, CA 93060 USA

© 2022 BendPak Inc. All rights reserved.

bendpak.com