Underscore® Rectangle

5' Bath

K-20201-RA

Features

- Convenient 19" step-over height retains the same depth as a standard 21" bath.
- Molded lumbar support offers extra comfort while bathing.
- Slotted overflow allows for deep soaking.
- Integral apron creates a clean, finished look.
- Integral flange helps prevent water from seeping behind wall and simplifies alcove installation.
- Textured bottom surface.

Material

- Acrylic.

Installation

- Right drain.
- Requires K-7271 or K-7272 Clearflo slotted overflow bath drain (sold separately).
- Alcove.

Required Products/Accessories

K-7271 Brass Slotted Overflow Bath Drain

or

K-7272 PVC Slotted Overflow Bath Drain

Recommended Products/Accessories

K-23726 Drain treatment

K-23732 Tub & shower cleaner



ADA

Codes/Standards

CSA B45.5/IAPMO Z124

ASTM E162

ASTM E662

ADA

KOHLER® Plastic Baths and Receptors Lifetime Limited Warranty

See website for detailed warranty information.

Available Colors/Finishes

Color tiles intended for reference only.

Color	Code	Description
	0	White

Underscore® Rectangle

5' Bath

K-20201-RA

No change in measurements if connected with drain illustrated. (K-7272)

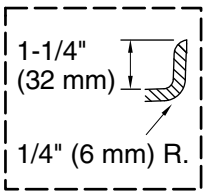

Integral Flange Detail

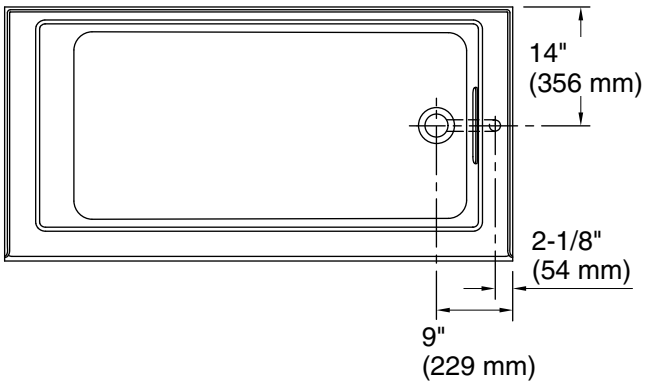

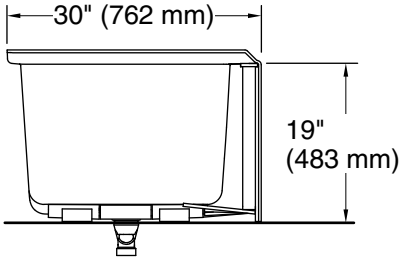

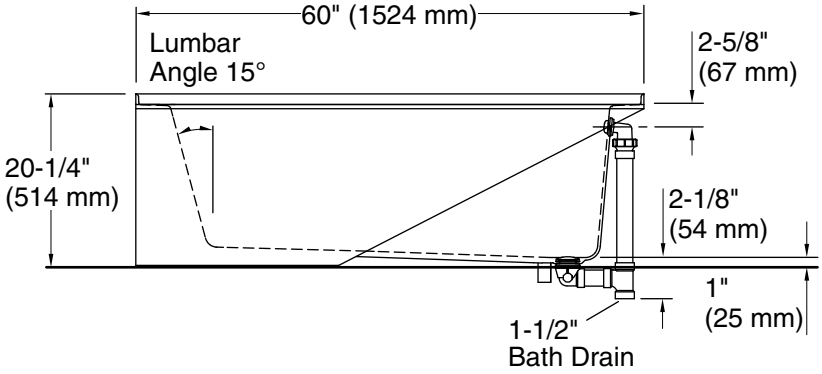

Technical Information

All product dimensions are nominal.

Installation:	Three-wall alcove
Drain location:	Right
Basin area, bottom:	46-1/4" x 22" (1175 mm x 559 mm)
Basin area, top:	52" x 24" (1321 mm x 610 mm)
Weight:	100 lbs (45.4 kg)
Minimum floor load:	56 lbs/ft² (273.4 kg/m²)
Water depth:	15-1/2" (394 mm)
Water capacity:	68 gal (257.4 L)
Minimum flat for door:	2-3/4" (70 mm)

Notes

Measure your actual product for rough-in details.

Install this product according to the installation instructions.

The hot water supply should be 70% of the capacity of the bath or greater. Installations will vary.

ADA compliant when installed to the specific requirements of these regulations.