REPAIR SHEET

BRAND		DESCRIPTION
RYOBI		**40 Volt 12 in. Brushless Chainsaw**
MODEL NO.	MFG. NO.	
RY40509	**107895001**	

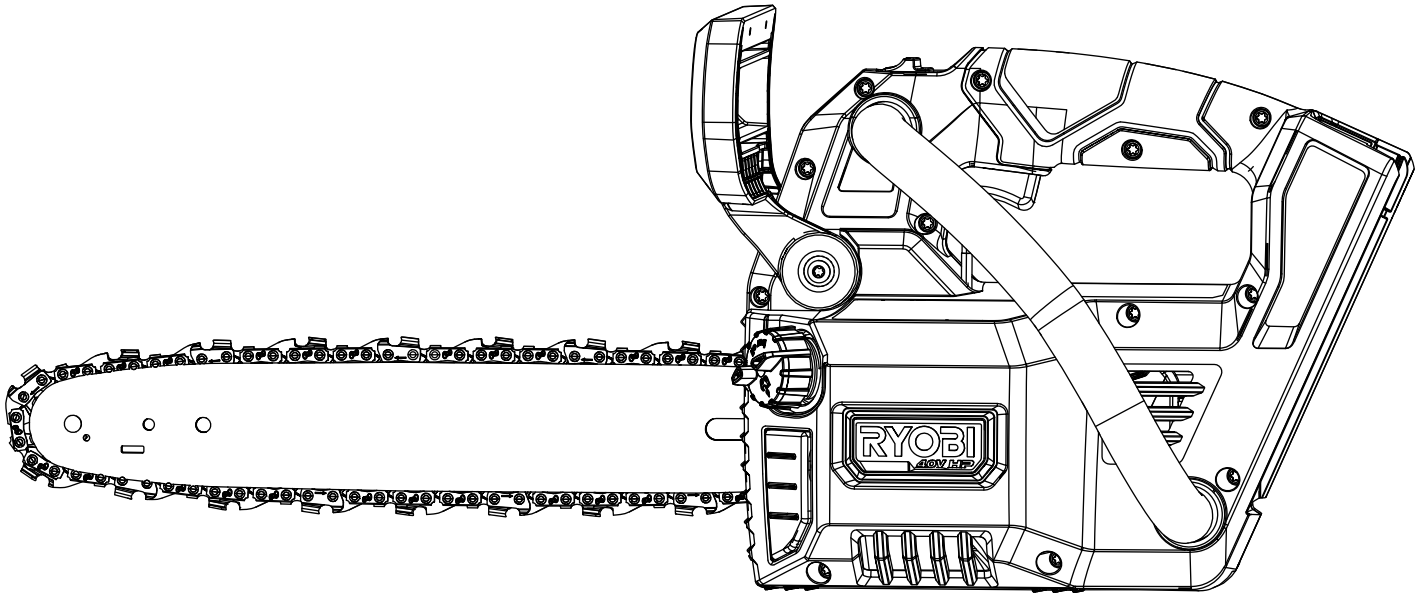

TTI OUTDOOR POWER EQUIPMENT, INC.
P.O. Box 1288, Anderson, SC 29622 ■ 1-800-525-2579 ■ **www.ryobitools.com**

12-8-21 (Rev:01)

The model number and manufacturing location will be found on a label attached to the product. Always mention this information in all communications regarding this product and when ordering parts.

RY40509

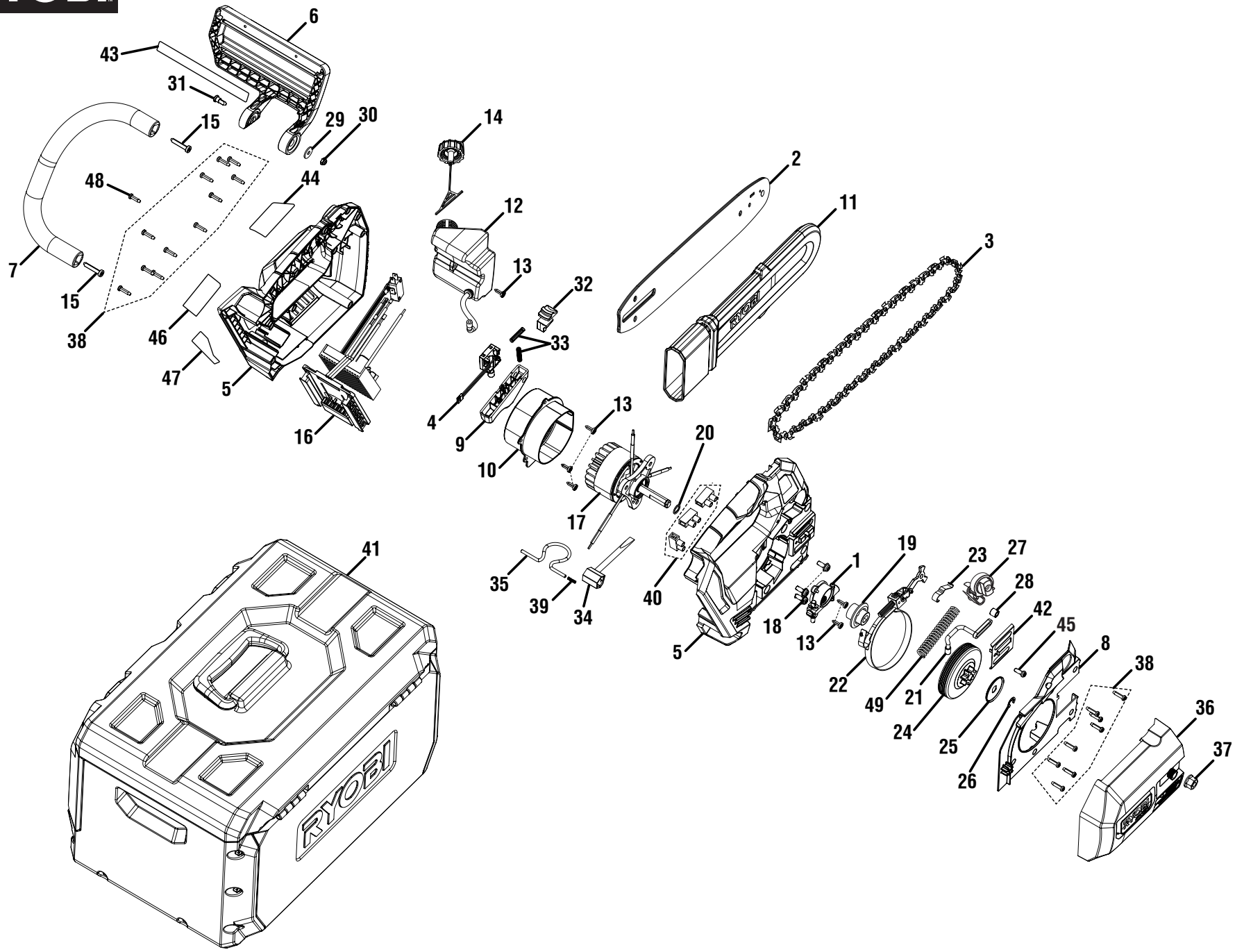
6
43
31
15
29
30
14
2
48
44
12
11
3
7
13
32
15
38
46
33
47
5
4
13
16
9
20
10
17
41
19
23
27
1
35
28
39
34
40
42
18
45
13
8
5
38
22
49
21
36
24
25
37
26

RY40509

PARTS LIST

KEY NO.	PART NO.	DESCRIPTION	QTY.
1	309516004	Oil Pump Assembly	1
2	682456002	12 in. Bar	1
3	678928001	12 in. Chain	1
4	760652002	Variable Switch	1
5	205697001	Housing Assembly (Inc. Key Nos. 44 & 46-47)	1
6	205698001	Front Guard Assembly (Inc. Key No. 43)	1
7	544797001	Front Handle	1
8	544798001	Brake Mechanism Cover	1
9	544799001	Trigger	1
10	544800001	Motor Volute	1
11	580968001	Scabbard	1
12	318415001	Oil Tank Assembly	1
13	660608001	Screw (M4 x 12 mm, T20 Torx Pan Hd.)	6
14	205699001	Oil Tank Cap Assembly	1
15	662053002	Screw (#10-14 x 25 mm, T25 Torx Pan Hd.)	2
16	205700001	Motor Controller, Switch, and Battery Connector Assembly	1
17	742807001	Motor	1
18	662052002	Screw (M5 x 12 mm, T25 Torx Pan Hd.)	3
19	537485001	Oil Pump Drive	1
20	658198001	Flat Washer	1
21	565069001	Oil Tube Outlet	1
22	205298001	Brake Band Assembly	1
23	678061001	Spring	1
24	612309002	Sprocket w/Clutch Drum	1
25	635367001	Cap Washer	1
26	636159001	E-Ring	1

KEY NO.	PART NO.	DESCRIPTION	QTY.
27	205299001	Chain Brake Assembly	1
28	678602001	Bushing	1
29	638988001	Washer	1
30	670682002	Nut	1
31	662113001	Screw (#10-14 x 0.559 mm, Double Thread T25 Torx Pan Hd.)	1
32	544847002	Trigger Lock-Out	1
33	694143001	Spring	2
34	612330001	Wrench	1
35	699850001	Hook Spring	1
36	205701001	Sprocket Cover and Chain Tension Assembly	1
37	678339003	Nut	1
38	662028001	Screw (M4 x 15.5 mm, T15 Torx Pan Hd.)	19
39	695984002	Metal Loop Spring	1
40	900876003	Terminal Block	3
41	318540001	Carry Case	1
42	674347001	Guide Bar Plate	1
43	941588994	Icons Label	1
44	941588995	Warning Danger Label	1
45	662083001	Screw (M4 x 12 mm, T20 Torx Pan Hd.)	1
46	941588997	Data Label	1
47	941588998	QR Label	1
48	661817001	Screw (M4 x 13.5 mm, T15 Torx Pan Hd.)	1
49	694415001	Spring	1
	Not Shown:		
	998000684	Operator's Manual	

RYOBI RY40509

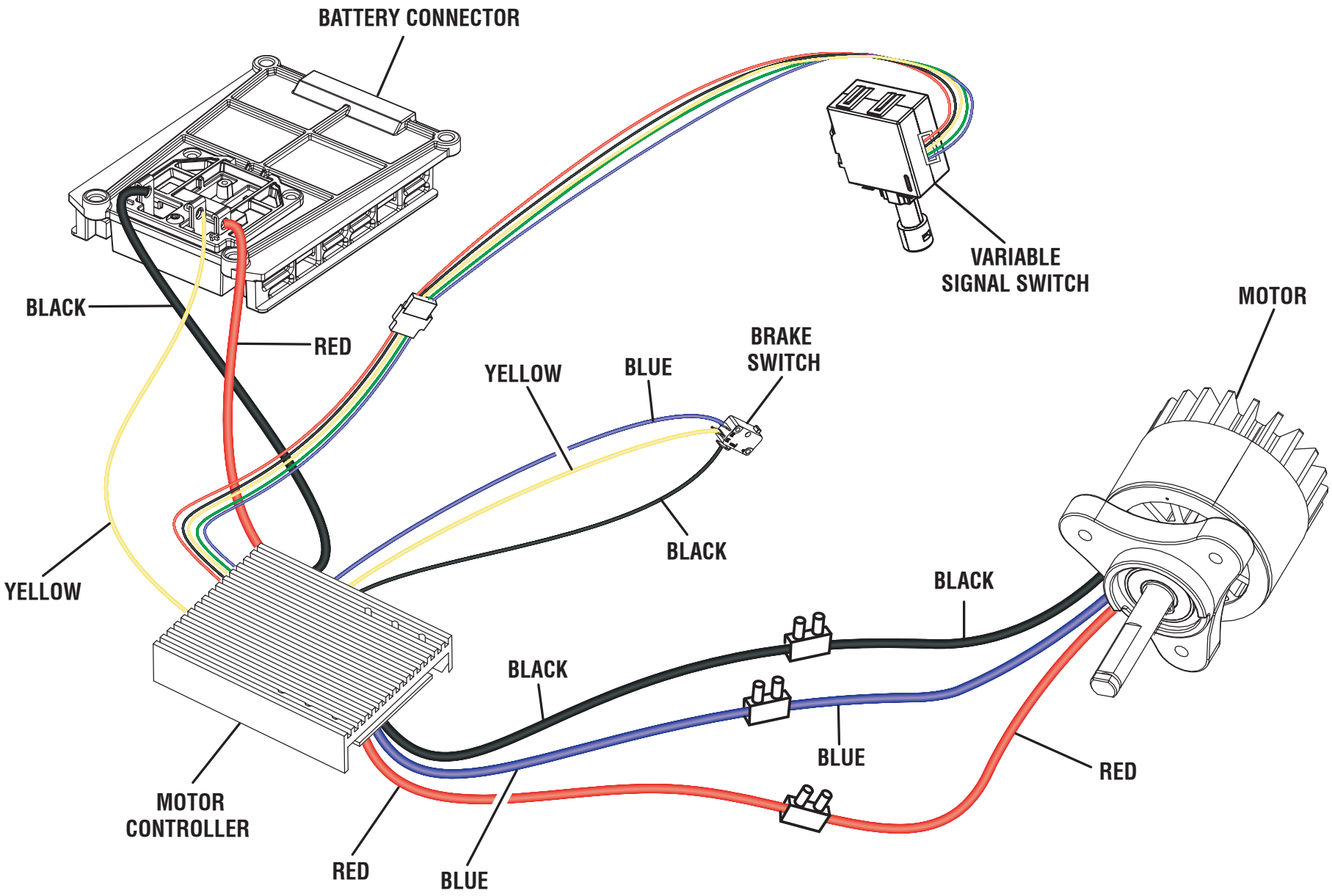

WIRING DIAGRAM