ONLY FOR REFERENCE

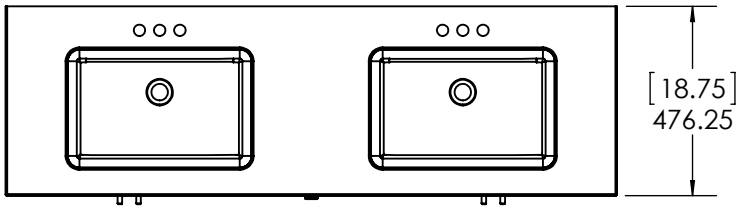

TOP VIEW

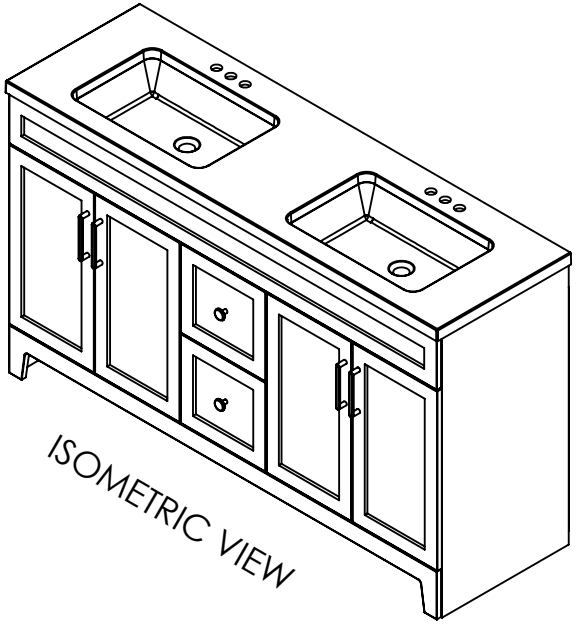

ISOMETRIC VIEW



FRONT VIEW

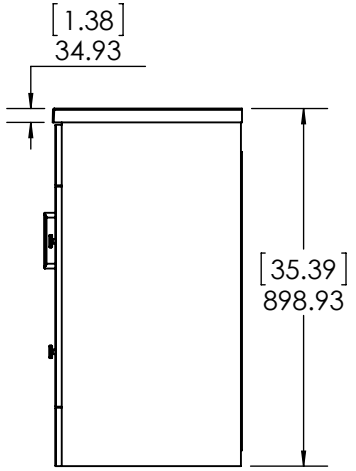

SIDE VIEW

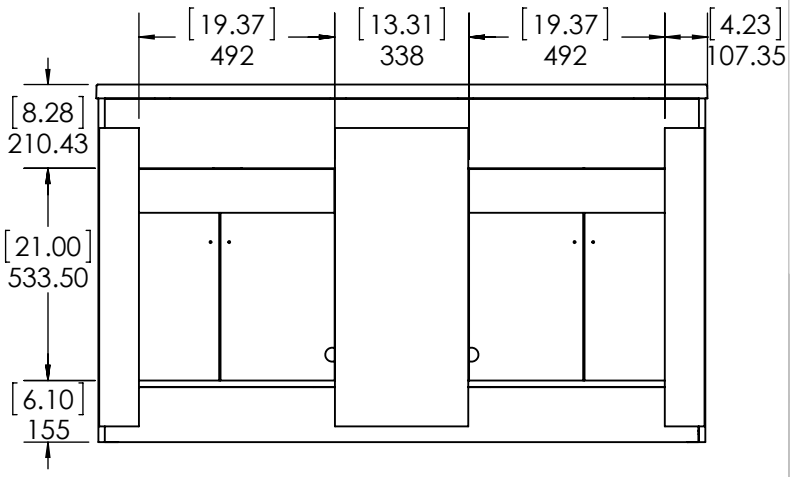

BACK VIEW

DWR	GUVM	07/10/24
REV	ING	
APR	R&D	

ITEM: **W075560P2**

REV **A**

NAME: 60in W0755 2Pc

MATERIAL: ----

ONLY FOR REFERENCE

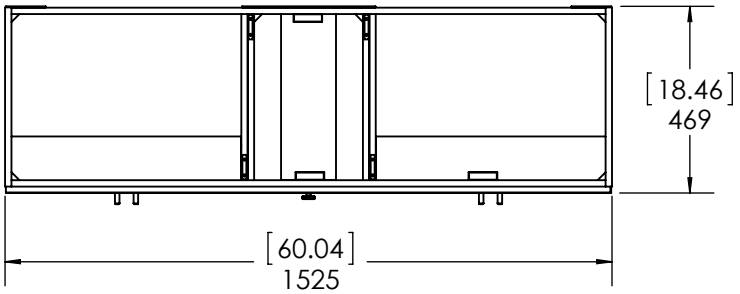

TOP VIEW

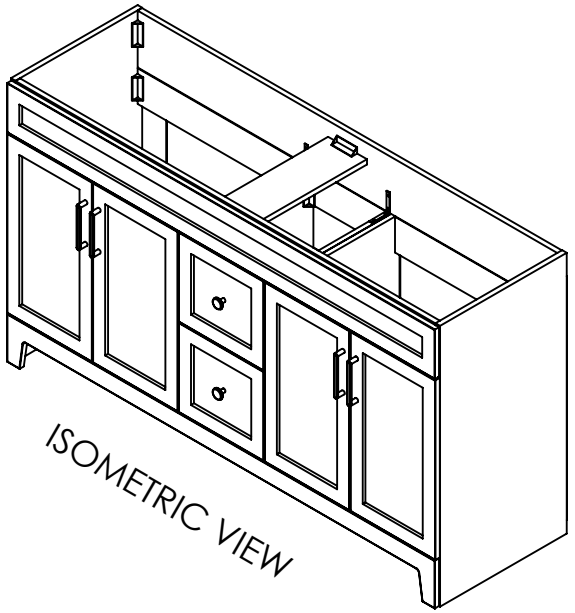

ISOMETRIC VIEW

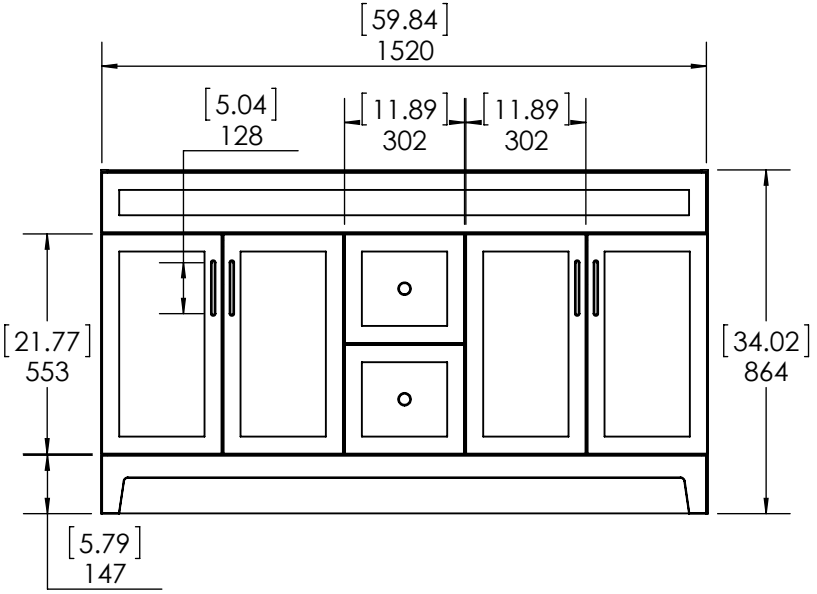

FRONT VIEW

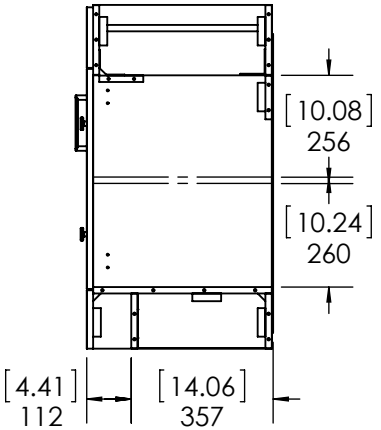

SIDE VIEW

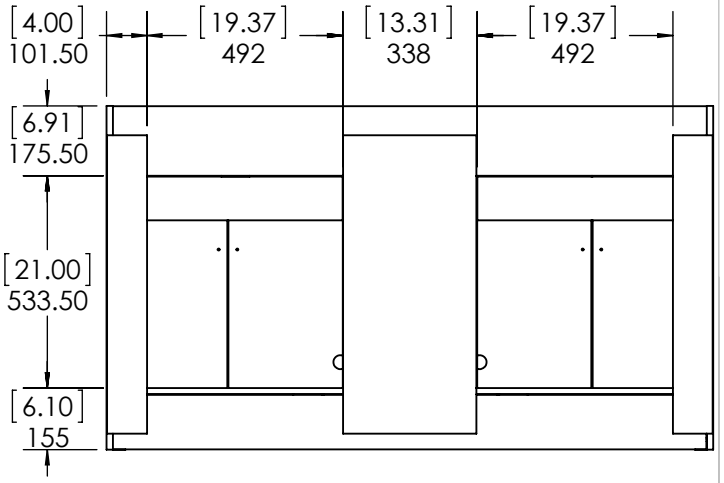

BACK VIEW

DWR	GUVM	07/10/24	
REV	ING		
APR	R&D		

ITEM: **W075560P2**

REV **A**

NAME: 60in W0755 2Pc

MATERIAL: ----

ITEM TYPE	ITEM ID	ITEM DESCRIPTION	DRAWING STATUS
FG	REFERENCE	Vtop Vertuo 60.5x18.75 Double Bowl 4in CM White	R&D

REV	DESCRIPTION	DATE	APPROVAL
0	RELEASED	07/09/24	E. SANDOVAL

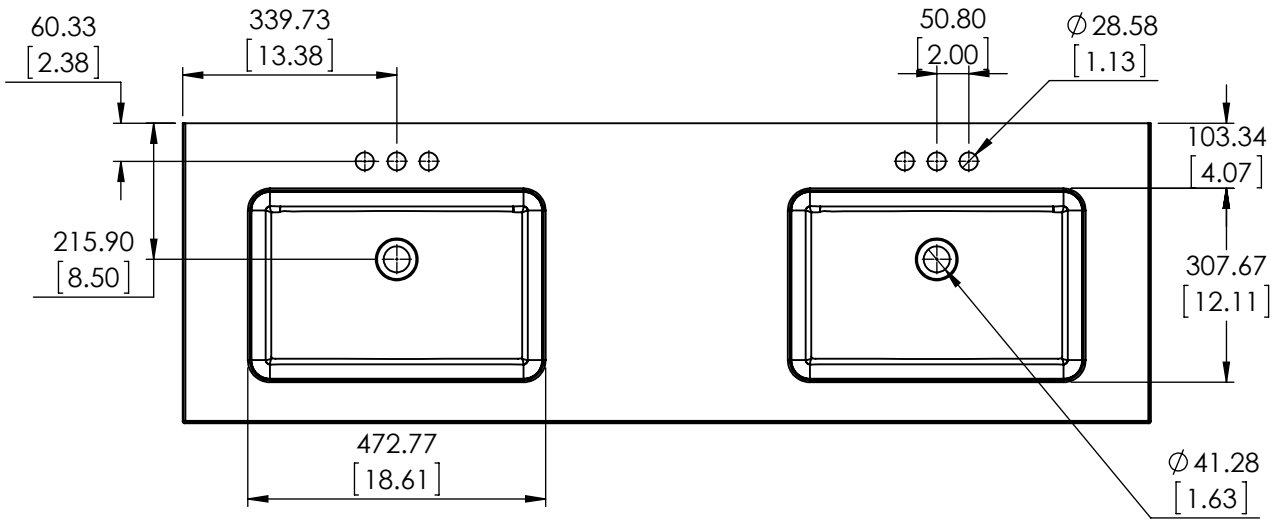

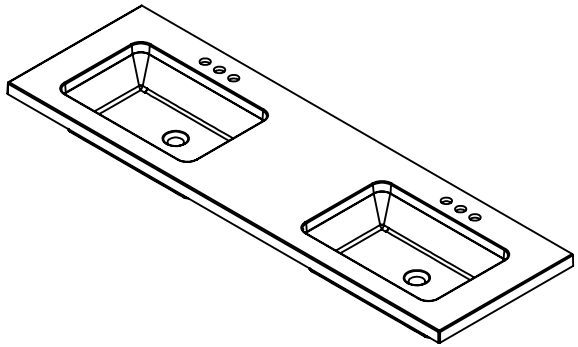

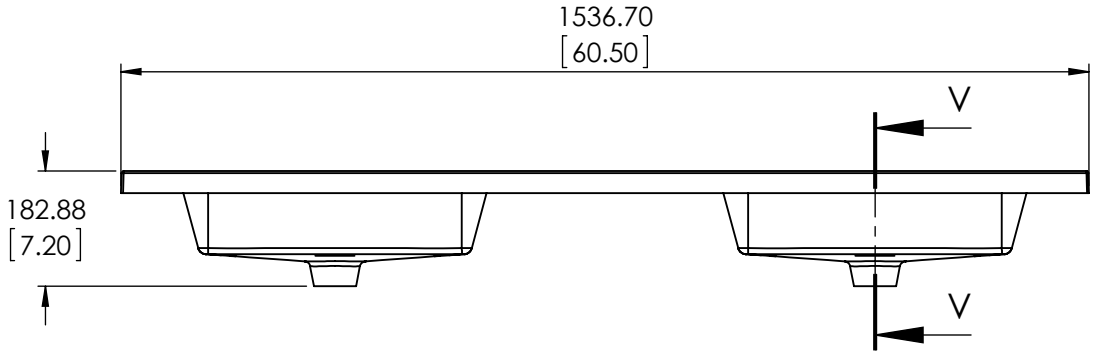

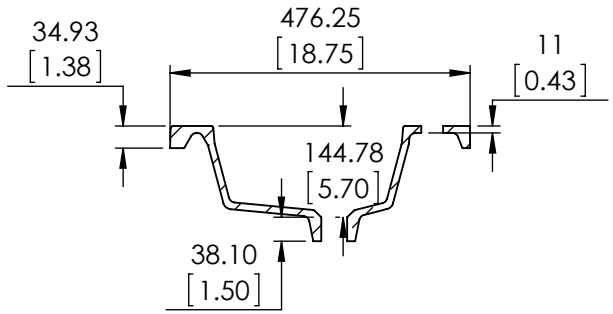

SCALE 1 : 12

PROPRIETARY AND CONFIDENTIAL

THE INFORMATION CONTAINED IN THIS DRAWING IS THE SOLE PROPERTY OF WOODCRAFTERS. ANY REPRODUCTION IN PART OR AS A WHOLE WITHOUT THE WRITTEN PERMISSION OF WOODCRAFTERS IS PROHIBITED.

UNLESS OTHERWISE SPECIFIED

DIMENSIONS ARE IN MM. AND [INCHES]

TOLERANCES ARE + 3.175 [.125] - 3.175 [0.125]

SCALE:1:12

	NAME	DATE
DRAWN	G. REYES	07/09/24
CHECKED	O. RAZO	07/09/24
ENG APPR.	J. GUZMAN	07/09/24
MFG APPR.	V. SANCHEZ	07/09/24

SIZE A | DWG. NO. FG | SHEET 1 OF 1