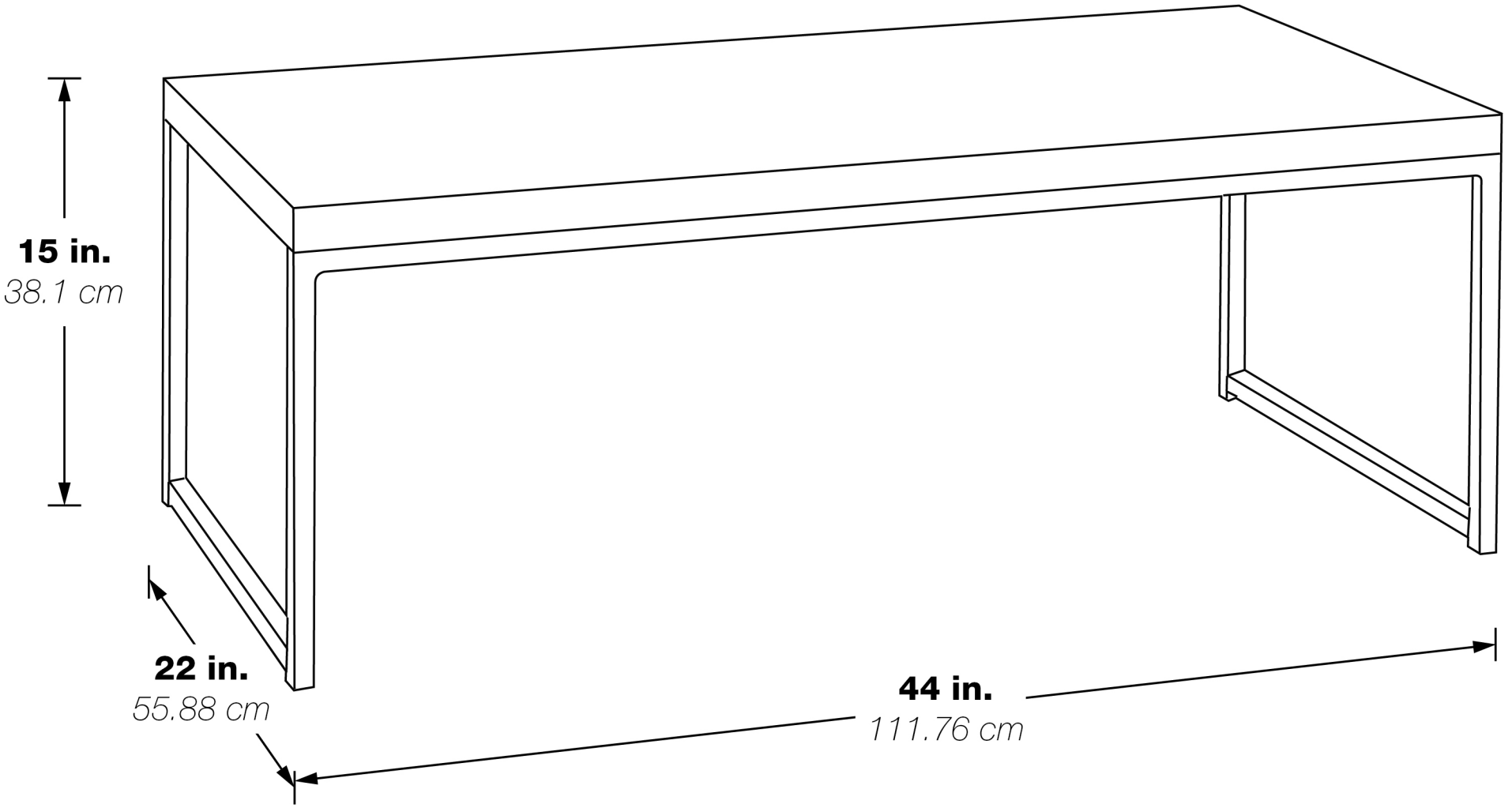
15 in.
38.1 cm
22 in.
55.88 cm
44 in.
111.76 cm