SAKERPLUS

CORDLESS
ELECTRIC SCISSORS

SK-ES04L

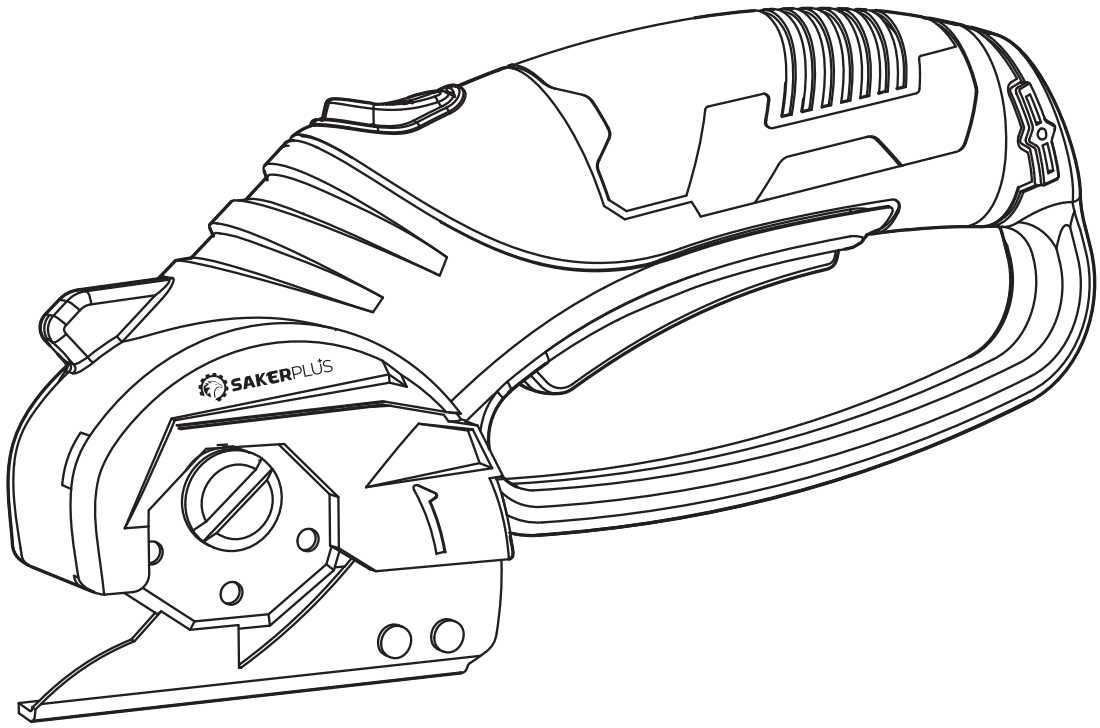

Notice: The blower is intended for household or commercial use.

WARNING

To reduce the risk of injury, the user must read and understand the Operator's Manual before using this product. Save these instructions for future reference.

PRODUCT PERFORMANCE

Cordless Electric Scissors	SK1806G
Rated Voltage	4V
No load speed	220rpm
Charging time	2 hr
Battery capacity	1.5Ah Built-in Battery
Max Cutting Strength	1/4”

PRODUCT COMPONENT

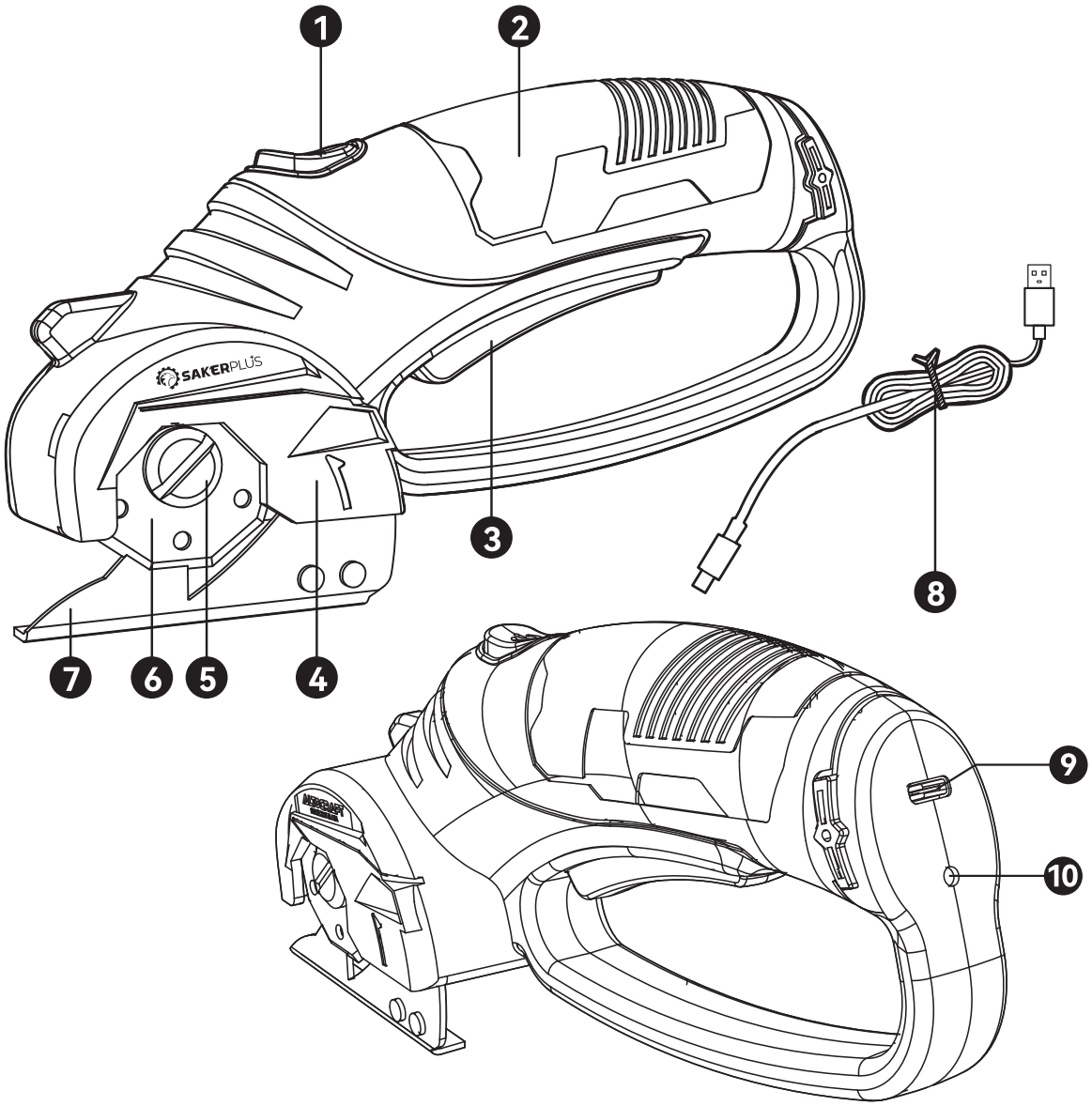

A1

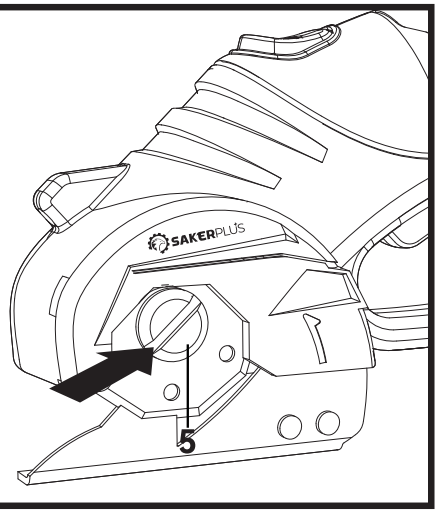

A2

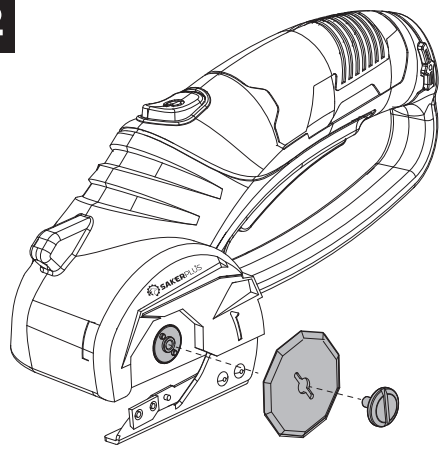

B

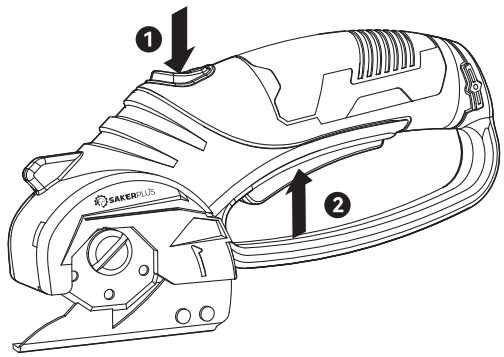

1.	LOCK-OFF SWITCH
2.	SOFT GRIP HANDLE
3.	ON/OFF SWITCH
4.	BLADE GUARD
5.	BLADE SCREW
6.	BLADE
7.	GUARD EDGE
8.	CHARGER
9.	CHARGER SOCKET
10.	CHARGING INDICATOR LIGHT

Not all the accessories illustrated or described are included in standard delivery.

WARNING: Some dust created by power sanding, sawing, grinding, drilling and other construction activities contains chemicals known to the state of California to cause cancer, birth defects or other reproductive harm. Some examples of these chemicals are:

- Lead from lead-based paints;
- Crystalline silica from bricks and cement and other masonry products;
- Arsenic and chromium from chemically-treated lumber.

Your risk from these exposures varies, depending on how often you do this type of work. To reduce your exposure to these chemical: work in a well ventilated area, and work with approved safety equipment, such as those dust masks that are specially designed to filter out microscopic particles.

WARNING: This product can expose you to chemicals including lead and Di(2-ethylhexyl)phthalate (DEHP) which are known to the State of California to cause cancer and birth defects or other reproductive harm.

GENERAL POWER TOOL SAFETY WARNINGS

WARNING: Read all safety warninas, instructions, illustrations and specifications provided with this power tool. Failure to follow all instructions listed below may result in electric shock, fire and/or serious injury.

Save all warnings and instructions for future reference.
The term “power tool” in the warnings refers to your mains-operated (corded) power tool or battery-operated (cordless) power tool.

1. Work area safety

a. **Keep work area clean and well lit.** Cluttered or dark areas invite accidents.
b. **Do not operate power tools in explosive atmospheres, such as in the presence of flammable liquids, gases or dust.**Power tools create sparks which may ignite the dust or fumes.
c. **Keep children and bystanders away while operating a power tool.** Distractions can cause you to lose control.

2. Electrical safety

a. **Power tool plugs must match the outlet. Never modify the plug in any way. Do not use any adapter plugs with earthed (grounded) power tools.** Unmodified plugs and matching outlets will reduce risk of electric shock.
b. **Avoid body contact with earthed or grounded surfaces, such as pipes, radiators, ranges and refrigerators.**There is an increased risk of electric shock if your body is earthed or grounded.
c. **Do not expose power tools to rain or wet conditions.** Water entering a power tool will increase the risk of electric shock.
d. **Do not abuse the cord. Never use the cord for carrying, pulling or unplugging the power tool. Keep cord away from heat, oil, sharp edges or moving parts.** Damaged or entangled cords increase the risk of electric shock.
e. **When operating a power tool outdoors, use an extension cord suitable for outdoor use.** Use of a cord suitable for outdoor use reduces the risk of electric shock.
f. **If operating a power tool in a damp location is unavoidable, use a residual current device (RCD) protected supply.** Use of an RCD reduces the risk of electric shock.

3. Personal safety

a. **Stay alert, watch what you are doing and use common sense when operating a power tool. Do not use a power tool while you are tired or under the influence of drugS, alcohol or medication.** A moment of inattention while operating power tools may result in serious personal injury.
b. **Use personal protective equipment. Always wear eye protection.** Protective equipment such as dust mask, non-skid safety shoes, hard hat, or hearing protection used for appropriate conditions will reduce personal injuries.
c. **Prevent unintentional starting. Ensure the switch is in the off-position before connecting to power source and/or battery pack, picking up or carrying the tool.** Carrying power tools with your finger on the switch or energising power tools that have the switch on invites accidents.
d. **Remove any adjusting key or wrench before turning the power tool on.** A wrench or a key left attached to a rotating part of the power tool may result in personal injury.
e. **Do not overreach. Keep proper footing and balance at all times.** This enables better control of the power tool in unexpected situations.

f. Dress properly. Do not wear loose clothing or jewellery. Keep your hair and clothing away from moving parts. Loose clothes, jewellery or long hair can be caught in moving parts.
g. If devices are provided for the connection of dust extraction and collection facilities, ensure these are connected and properly used. Use of dust collection can reduce dust-related hazards.
h. Do not let familiarity gained from frequent use of tools allow you to become complacent and ignore tool safety principles. A careless action can cause severe injury within a fraction of a second.

4. Power tool use and care

a. **Do not force the power tool. Use the correct power tool for your application.** The correct power tool will do the job better and safer at the rate for which it was designed.
b. **Do not use the power tool if the switch does not turn it on and off.** Any power tool that cannot be controlled with the switch is dangerous and must be repaired.
c. **Disconnect the plug from the power source and/or remove the battery pack, if detachable, from the power tool before making any adjustments, changing accessories, or storing power tools.** Such preventive safety measures reduce the risk of starting the power tool accidentally.
d. **Store idle power tools out of the reach of children and do not allow persons unfamiliar with the power tool or these instructions to operate the power tool.** Power tools are dangerous in the hands of untrained users.
e. **Maintain power tools and accessories. Check for misalignment or binding of moving parts, breakage of parts and any other condition that may affect the power tool's operation. If damaged, have the power tool repaired before use.** Many accidents are caused by poorly maintained power tools.
f. **Keep cutting tools sharp and clean.**Properly maintained cutting tools with sharp cutting edges are less likely to bind and are easier to control.
g. **Use the power tool, accessories and tool bits etc. in accordance with these instructions, taking into account the working conditions and the work to be performed.** Use of the power tool for operations different from those intended could result in a hazardous situation.
h. **Keep handles and grasping surfaces dry, clean and free from oil and grease.** Slippery handles and grasping surfaces do not allow for safe handling and control of the tool in unexpected situations.

5. Battery tool use and care

a. **Recharge only with the charger specified by the manufacturer.** A charger that is suitable for one type of battery pack may create a risk of fire when used with another battery pack.
b. **Use power tools only with specifically designated battery packs.** Use of any other battery packs may create a risk of injury and fire.
c. **When battery pack is not in use, keep it away from other metal objects, like paper clips, coins, keys, nails, screws or other small metal objects, that can make a connection from one terminal to another**. Shorting the battery terminals together may cause burns or a fire.

d. Under abusive conditions, liquid may be elected from the batteryi avoid contact If contact accidentally occurs, flush with water. If liquid contacts eyes, additionally seek medical help. Liquid ejected from the battery may cause irritation or burns.
e. Do not use a battery pack or tool that is damaged or modified. Damaged or modifed batteries may exhibit unpredictable behaviour resulting in fire, explosion or risk of injury.
f. Do not expose a battery pack or tool to fire or excessive temperature. Exposure to fire or temperature above 130°C may cause explosion.
g. Follow all charging instructions and do not charge the battery pack or tool outside the temperature range specified in the instructions. Charging improperly or at temperatures outside the specifed range may damage the battery andincrease the risk of fire.

6. Service
a. **have your power tool serviced by a qualified repair person using only identical replacement parts.**This will ensure that the safety of the power tool is maintained.
b. **Never service damaged battery packs.** Service of battery packs should only be performed by the manufacturer or authorized service providers.

SAFETY WARNINGS FOR BATTERY CELLSINSIDETHETOOL
a. **Do not dismantle, open or shred cells.**
b. **Do not expose power tool to heat or fire. Avoid storage in direct sunlight.**
c. **Do not short-circuit charging terminal. Do not store power tool haphazardly in a box or drawer where charging terminal may short-circuit each other or be short-circuited by conductive materials.** When power tool is not in use, keep it away from other metal objects, like paper clips, coins, keys, nails, screws or other small metal objects, that can make a connection from one charging terminal to another. Shorting the battery terminals together may cause burns or fire.
d. **Do not subject power tool to mechanical shock.**
e. **In the event of battery leaking, do not allow the liquid to come in contact with the skin or eyes. If contact has been made, wash the affected area with copious amounts of water and seek medical advice.**
f. **Keep power tool out of the reach of children.**
g. **Keep power tool clean and dry.**
h. **Wipe the charging terminals with a clean dry cloth if they become dirty.**
i. **Power tool need to be charged before use. Always use the correct charger and refer to the manufacturer's instructions or equipment manual for proper charging instructions.**
j. **Do not leave power tool on prolonged charge when not in use.**
k. **After extended periods of storage, it may be necessary to charge and discharge the power tool several times to obtain maximum performance.**
l. **Recharge only with the charger specified by Worx. Do not use any charger other than that specifically provided for use with the equipment.**
m. **Retain the original product literature for future reference.**
n. **Dispose of properly.**
o. **Do not use any cell which is not designed for use with the equipment.**
p. **Do not mix cells of different manufacture, capacity, size or type within a device.**
q. **Keep the battery away from microwaves and high pressure.**

SYMBOL	
	To reduce the risk of injury, user must read instruction manual
	Batteries may enter water cycle if disposed improperly, which can be hazardous for ecosystem. Do not dispose of waste batteries as unsorted municipal waste.
	Li-Ion battery, battery must be recycled
	Do not burn

OPERATING INSTRUCTIONS

 **NOTE:**Before using the tool, read the instruction book carefully.

ASSEMBLY
REMOVING AND INSTALLING THE BLADE (See Fig. A1, A2)

NOTE: When changing the blade, you need to find something to secure the blade (e.g. vise).Then,you must insert an object

(such as a small slotted screwdriver) into the Blade screw (5) to lock in place. (See Fig. A1)

1. Rotate blade screw counter clockwise with a slot tip screwdriver and remove the blade screw.
2. Slide the blade away from the upper guard and remove blade.
3. Slide new blade under the upper guard with beveled edges facing you.
4. Align hole in blade with hole in the blade shaft, replace screw and securely tighten the blade screw clockwise.

OPERATION
INTENDED USE

The tool is intended for cutting flexible, soft materials of up to 6 mm in thickness, such as carpet, PVC, cardboard, leather. fabrics and similar materials.

1. ON / OFF SWITCH (See Fig. B)

Your switch is locked off to prevent accidental starting. Depress lock off button then on/off switch and release lock off button. Your tool is now on. To switch off just release the on/off switch.

2. CHARGING THE TOOL

The battery charger supplied matches to the Li-ion battery installed in the machine. Do not use other battery chargers.The Li-ion battery is protected against deep discharging. When the battery is empty, the machine is switched off by means of a protective circuit: the blade will no longer move.In a warm environment or after heavy use, the battery pack may become too hot to permit charging. Allow time for the battery to cool down before recharging.

3. CHARGING

Plug charger plug into a suitable power outlet and afterwards plug your tool into the battery charger. The charging indicator (red) will illuminate at this time.The charger indicator will turn green when charging is complete. Then unplug the charging plug from the wall socket and then remove the tool from the battery charger.

4. CUTTING

Thin materials, such as fabrics, can be pulled into the tool during cutting and become wedged. Therefore, do not apply too much pressure with these materials in order to achieve good cuting results. During cutting, apply sufficient tension while holding fabrics and cut slowly.

WARNING!
IMPORTANT: Do not allow the foot to become wedged during cutting. The foot must be parallel to the cut.

During the charging procedure, the handle of the machine warms up.
This is normal.When not using for extended periods, disconnect the battery charger from the socket.
Do not use the machine during the charging procedure.

MAINTAIN TOOLS WITH CARE

Your power tool requires no additional lubrication or maintenance. There are no user serviceable parts in your power tool. Never use water or chemical cleaners to clean your power tool. Wipe clean with a dry cloth. Always store your power tool in a dry place. Keep the motor ventilation slots clean. Keep all working controls free of dust.

Cleaning

WARNING: To avoid accidents, always disconnect the tool and/or charger from the power supply before cleaning.
The tool may be cleaned most effectively with compressed dry air. Always wear safety goggles when cleaning tools with compressed air.

When cutting, material residue can When cutting, material residue canaccumulate under the upper guard. Remove blade and clean upper guard regularly using a brush or lightly moistened cloth.Ventilation openings and switch levers must be kept clean and free of foreign matter. Do not attempt to clean by inserting pointed objects through opening.

SYMBOL

	To reduce the risk of injury, user must read instruction manual
	Batteries may enter water cycle if disposed improperly, which can be hazardous for ecosystem. Do not dispose of waste batteries as unsorted municipal waste.
 Li-Ion	Li-Ion battery, battery must be recycled
	Do not burn



CAUTION: Certain cleaning agents and solvents damage plastic parts. Some of these are: gasoline, carbon tetrachloride, chlorinated cleaning solvents, ammonia and household detergents that contain ammonia.

TROUBLESHOOTING

Problem	Probable cause	Suggested remedy
Blade will not run	1. Switch in OFF position	1. Make sure you depress lock off button and on/off switch. Your tool is now on. Release lock off button
	2. Battery is powered off	2. Charge your tool with the supplied charger
	3. Your tool is in charging status	3. Unplug the charger after charging is completed.
Charging indicator will not illuminate	1. Connector pin is not plugged in the charger socket completely.	1. Make sure the connection is good.
	2. No electrical power at wall outlet	2. Check circuit breaker or fuse at electrical panel.
Can not remove the blade	1. The spindle slot (13) is not locked in place	1. Make sure you insert an object (such as a small slotted screw driver) into the spindle slot (13) to lock in place. (See Fig. A1)

FOR BATTERY TOOLS

The ambient temperature range for the use and storage of tool and battery is 32°F–113°F (0°C–45°C).

The recommended ambient temperature range for the charging system during charging is 32°F–104°F (0°C–40°C).

SAKERPLUS

CORDLESS
ELECTRIC SCISSORS

SK-ES04L



SAKERPLUS **OFFICIAL WEBSITE**
www.sakerplus.com

CONTACT US AT: cs@sakerplus.com

FACEBOOK: https://www.facebook.com/Sakerplusbrand