20-year warranty

Great news! Your POLYWOOD warranty is already activated, no need to send anything in. Located on the bottom of each item is a sticker with a serial number. Please keep this number for your records.

View our full warranty:
polywoodoutdoor.com/warranty

Having trouble?

If you have questions or concerns regarding assembly instructions or missing parts, please contact us at
hello@polywoodoutdoor.com
or **(833) 665-6300**

Cleaning tips

For a Quick Clean:
Simply wipe down with soap and water.

For a Deep Clean:
Wipe on ⅓ bleach and ⅔ water solution with a clean cloth and let it sit on the lumber for a few minutes (this will not affect the color). Then, loosen any dirt and debris that may catch in surface grooves with a soft bristle brush; hose down to rinse.

For a High-Power Clean:
Use a pressure power washer (not exceeding 1,500 psi) to spray off dirt and debris. Apply a ⅓ bleach and ⅔ water solution and scrub with a soft bristle brush. Hose down to rinse.

09/16/2019

POLYWOOD

Assembly Instructions

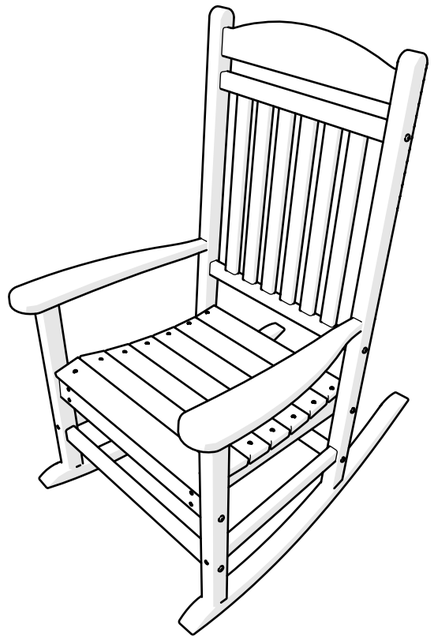

R105

Grant Park Rocking Chair

polywoodoutdoor.com

Thank You

Thank you for choosing POLYWOOD!
We hope our furniture helps create a gathering place for you and your loved ones to enjoy for many years to come!

Join the POLYWOOD Owner's Community

Sign up at:
polywoodoutdoor.com/welcome

As a POLYWOOD Owner, you'll be among the first to access exclusive information about new product launches, special promotions, and giveaways.

Reach Out

Questions? Please contact us:
hello@polywoodoutdoor.com
(833) 665-6300

Watch & Learn

For assembly tips and videos visit:
polywoodoutdoor.com/assembly

Share your space

We love to see where our furniture ends up — snap a pic and tag it on Instagram or Facebook for your chance to be featured on our social channels!
#polywood #rethinkoutdoor

facebook.com/polywoodoutdoor

@POLYWOOD

pinterest.com/polywood

youtube.com/polywood

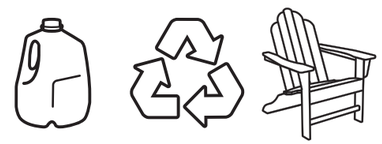

Did you know?

On average, POLYWOOD recycles 400,000 milk jugs a day!

Learn more about our story:
genuinePOLYWOOD.com

TOOLS

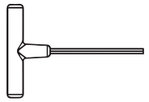

4mm T-handle
hex key (included)

4mm hex, straight,
for drill (included)

PARTS

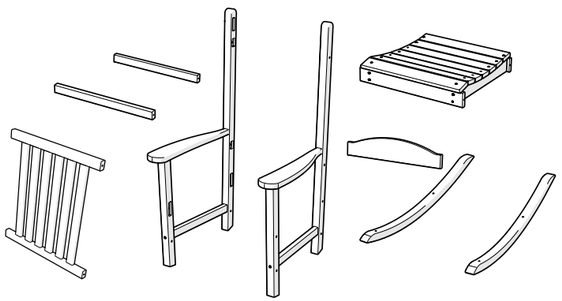

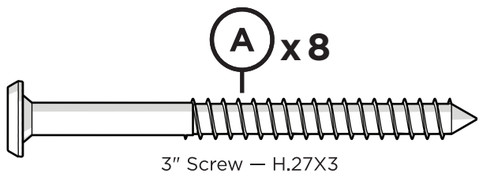

3" Screw — H.27X3

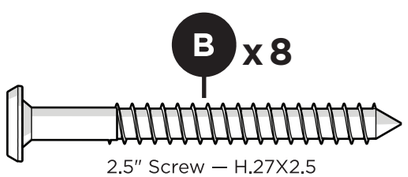

2.5" Screw — H.27X2.5

Something missing?
Call (833) 665-6300

1

For assembly videos and more,
visit **youtube.com/polywood**

Some may find this easier to
assemble with a friend.

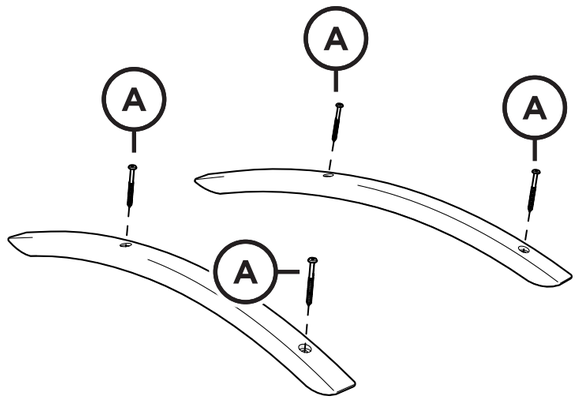

2

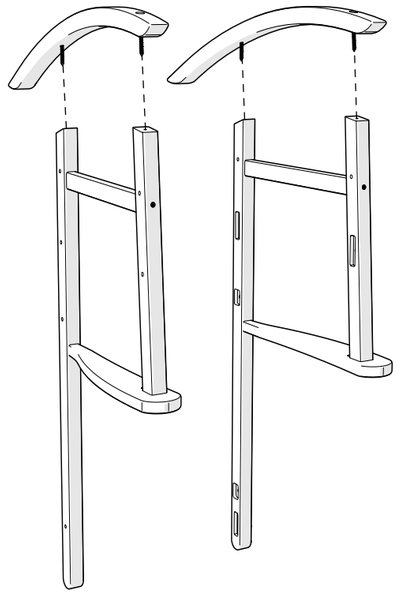

Partially thread each screw into
pilot holes by hand before fully
tightening.

3

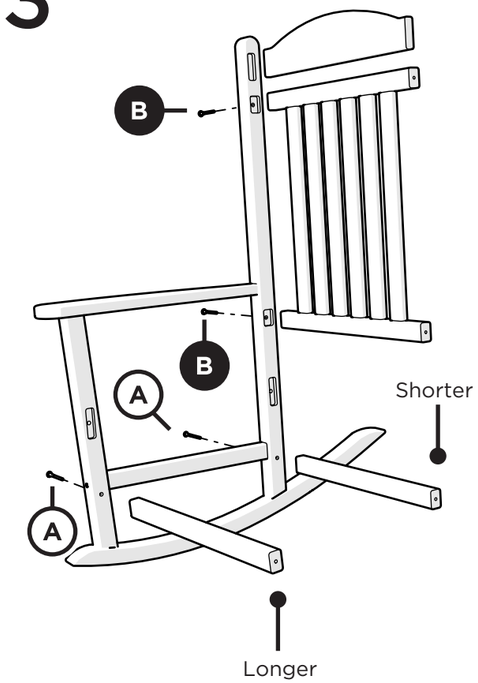

4

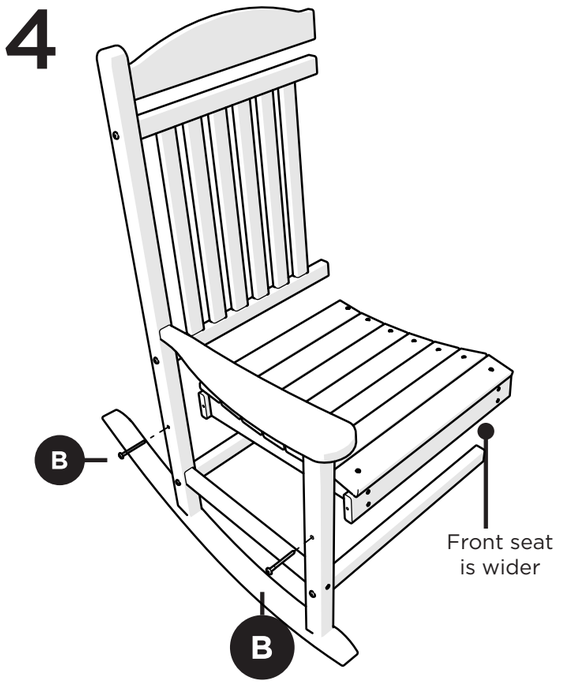

5

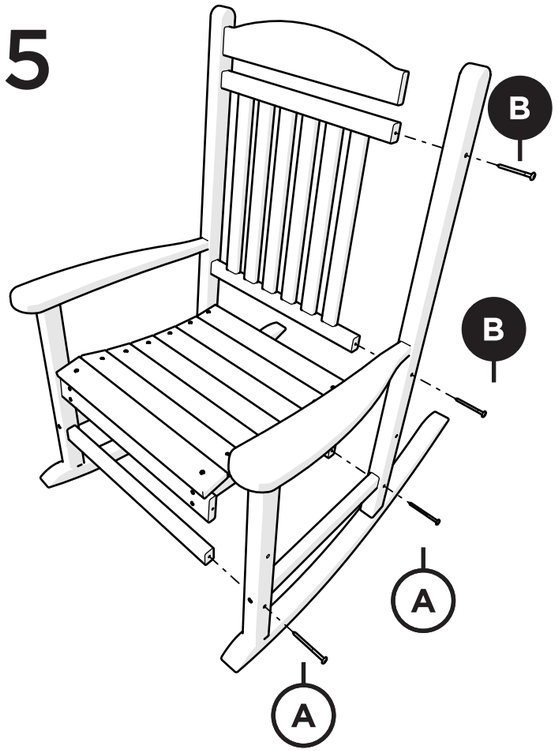

6

