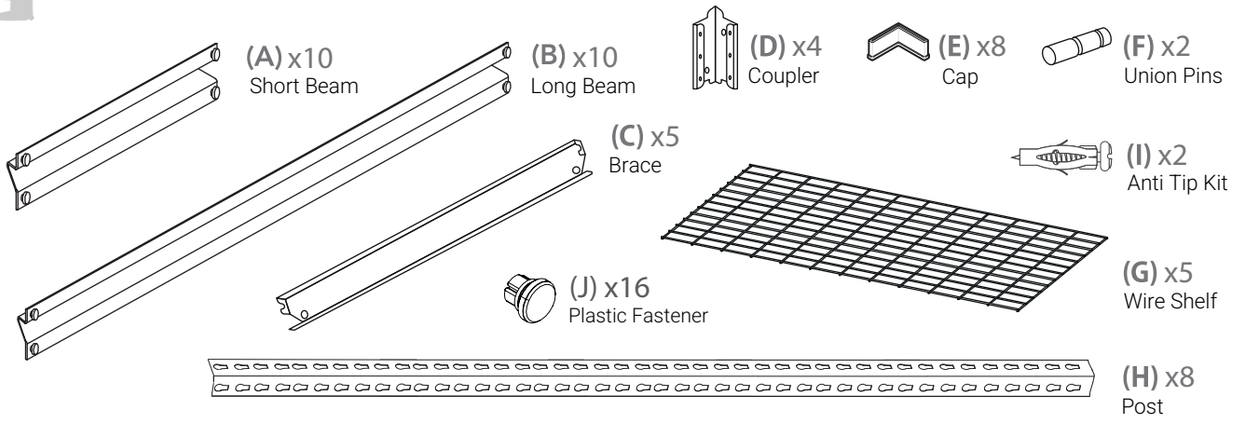

Tools needed:

- Rubber mallet (recommended)
- Gloves (optional, for safety)
- A Second person to Help

Assemble the First Level Frame

01.

1. Add the post cap (E) to the base of the vertical post (H) Ensure the 'O' holes face up, the slot must point down.
2. Connect one short beam (A) to the bottom of two vertical post (H) leaving one key hole slot at the bottom
3. Choose the height at which you want to place the second level. Once you've decided, place the top short beam (A) and repeat the same process to build the opposite frame.

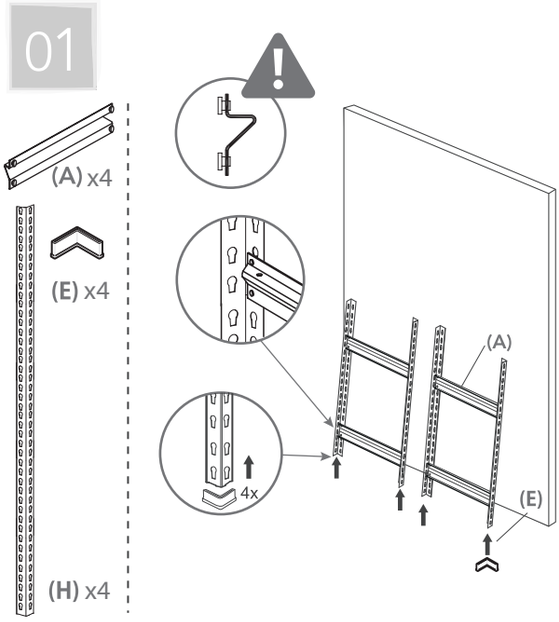

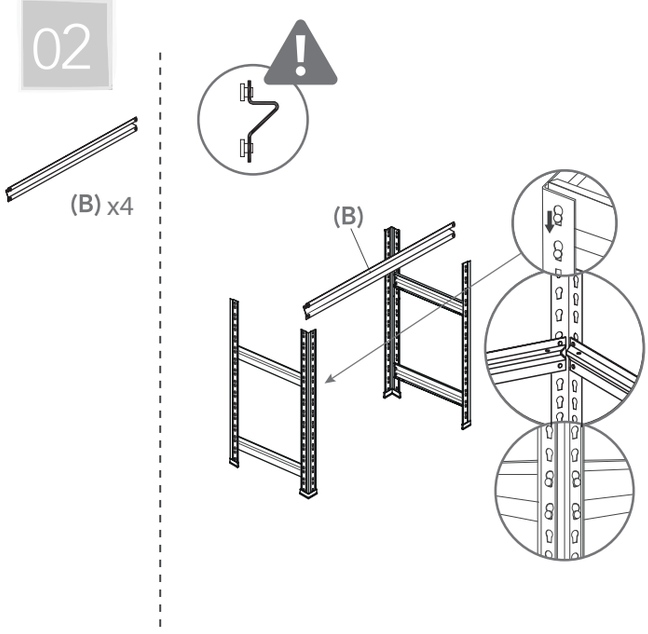

02.

1. Connect one long beam (B) to the vertical post (H) in-line with the short beam (A) which was previously assembled.
2. Ensure both rivets of the beams are inserted in two postions of the vertical beams.
3. Tap lightly with a rubber mallet to lock the rivets securely.

Complete the Upright Structure

03.

1. Attach the 4 couplers (D) to the top of the posts (H) and lock them into key hole position.
2. Take a new post (H) and attach it to the coupler. Repeat this process 3 more times.
3. **Important**: The slot must point down

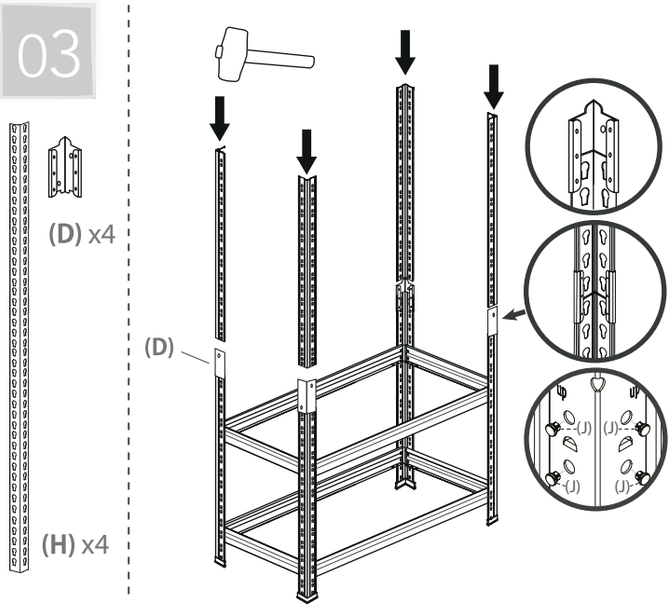

04

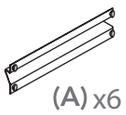

(A) x6

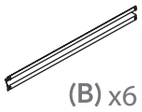

(B) x6

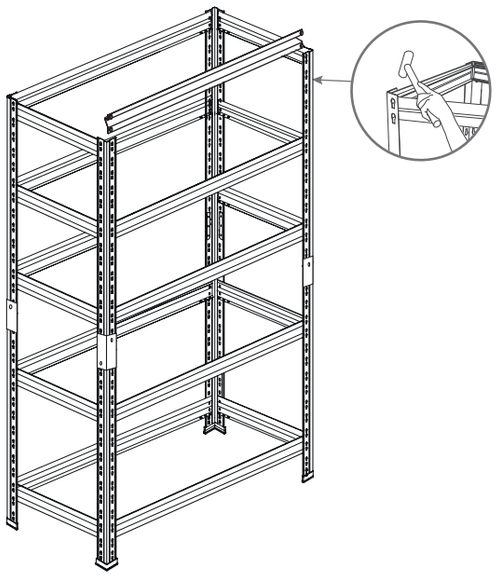

Build the Top Levels

04.

1. Continue working your way upward to install the remaining tiers at the desired heights.

05

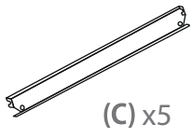

(C) x5

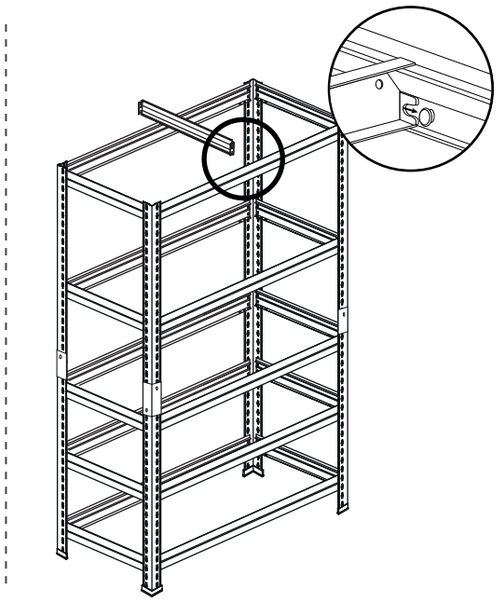

Add the Cross beams

05.

1. Add the brace (C). Ensure the rivets are fixed per image. Using a flat head screwdriver insert it into the slot and gently increase the opening width to allow for the tooth to enter.
2. **Hint**: Bending the tooth inward will further secure the support in place.
3. Repeat for the remaining cross beams to stabilize the structure.

Add the Shelf Panels

06.

1. Place the Wire Shelfs (G) on top of the beams.
2. Attach the remaining Plastic Caps (E) to the tops of the posts for added safety.

06

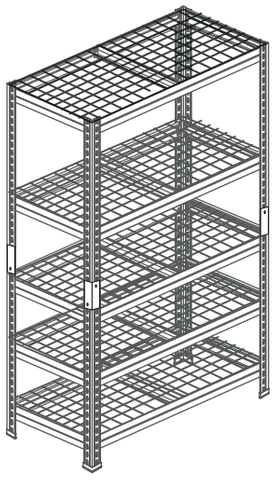

07



(F) x2

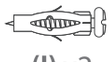

(I) x2

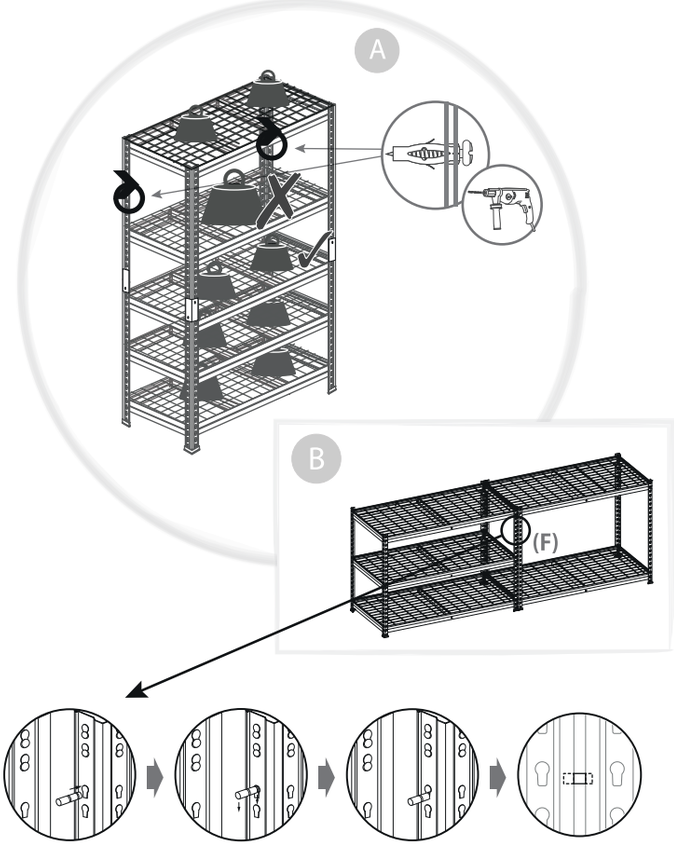

Final Adjustments

07.

1. Check that all rivets are securely locked in place. Tap lightly with the mallet if needed.
2. **Important:** Always anchor the unit to the wall using an anti tip kit. This product should be permanently anchored to a wall or other suitable surface to avoid serious or fatal injury. Do not allow children to climb on this furniture, it may topple over and badly injure a child.
3. Ensure the unit is stable before placing any weight on it.

Connecting the Two Workbenches (Optional)

If you choose to assemble the shelving as two separate workbenches, secure them together using the Connecting Pins (F):

1. Place both workbenches side by side.
2. Insert a Connecting Pin (F) into the round hole of the keyhole slot.
3. Slide the pin downward until it locks in place.
4. Repeat for the other side to secure both workbenches.